# REMEDIAL INVESTIGATION

## 109-125 MARBLEDALE ROAD
## TUCKAHOE, NEW YORK
## BROWNFIELD CLEANUP PROGRAM SITE # C360143

PREPARED FOR:

BILWIN DEVELOPMENT AFFILIATES, LLC.
365 WHITE PLAINS ROAD
EASTCHESTER, NEW YORK 10709

PREPARED BY:

HYDROENVIRONMENTAL SOLUTIONS, INC.
ENVIRONMENTAL CONSULTANTS
ONE DEANS BRIDGE ROAD
SOMERS, NEW YORK 10589
(914) 276-2560
wcanavan@hesny.com

January 14, 2016

Prepared by:

William A. Canavan, PG, LSRP
Senior Project Manager

Reviewed and Approved by:

Jonathan B. Ashley, PE
Senior Engineer
D&K Consulting Engineers, P.C.

HydroEnvironmental
SOLUTIONS, INC.
One Deans Bridge Road Somers, New York 10589
(914) 276 - 2560 Fax: (914) 276 - 2664

## Certification

I William A. Canavan certify that I am currently a Qualified Environmental Professional as defined in 6 NYCRR Part 375 and that this Remedial Investigation Report was prepared in accordance with all applicable statutes and regulations and in substantial conformance with the DER Technical Guidance for Site Investigation and Remediation (DER-10) and that all activities were performed in full accordance with the DER-approved work plan and any DER approved modifications.

William A. Canavan, PG, LSRP

1/14/16

Date

# Table of Contents

**1. Introduction ..... 1**

1.1 Purpose and Scope ..... 1

1.2 Site Description and Location ..... 2

1.3 Site Background and History ..... 2

1.4 Report Organization ..... 2

**2. Physical Setting ..... 3**

2.1. Land Use and Demography ..... 3

2.2 Topography and Drainage ..... 3

2.3 Climate ..... 4

2.4 Soils ..... 4

2.5 Regional Geology and Hydrogeology ..... 5

2.5.1 Regional Overburden Geology ..... 5

2.5.2 Regional Bedrock Geology ..... 5

2.5.3 Regional Hydrogeology ..... 5

**3. Summary of Previous Investigations ..... 5**

3.1 General ..... 5

3.2 Previous Investigations ..... 6

**4. Remedial Investigation Methods ..... 9**

4.1 General ..... 9

4.2 Soil Boring Program ..... 10

4.2.1 Purpose ..... 10

4.2.2 Methodology ..... 10

4.2.3 Results ..... 10

4.3 Subsurface Soil Sampling & Analyses ..... 11

4.3.1 Purpose ..... 11

4.3.2 Methodology ..... 11

4.3.3 Results ..... 11

4.4 Monitoring Well Installation ..... 11
4.4.1 Purpose ..... 11
4.4.2 Methodology ..... 12
4.4.3 Monitoring Well Development ..... 12
4.5 Soil Vapor Characterization ..... 12
4.5.1 Purpose ..... 12
4.5.2 Methodology ..... 13
4.5.3 Results ..... 14
4.6 Surface Soil Sampling Program ..... 14
4.6.1 Purpose ..... 14
4.6.2 Methodology ..... 14
4.6.3 Results ..... 14
4.7 Groundwater Sampling Program ..... 14
4.7.1 Purpose ..... 14
4.7.2 Methodology ..... 15
4.7.3 Results ..... 15
**5. Hydrogeologic Evaluation ..... 15**
5.1 Introduction ..... 15
5.2 Site Geology ..... 15
5.3 Site Hydrogeology ..... 16
**6. Data Validation/Usability ..... 17**
6.1 Validated Surface Soil Results ..... 18
6.2 Validated Subsurface Soil Results ..... 19
6.3 Validated Groundwater Results ..... 19
6.4 Validated Soil Vapor Results ..... 19
**7. Site Contaminant Characterization ..... 20**
7.1 Introduction ..... 20
7.2 Subsurface Soil Vapor ..... 21
7.3 Surface Soil Results ..... 22
7.4 Subsurface Soil Results ..... 23

7.5 Groundwater Sample Results ..... 25

**8. Human Health Evaluation ..... 26**

8.1 Overview ..... 27

8.2 Data Evaluation ..... 27

8.2.1 Surface Soil/Fill ..... 29

8.2.2 Subsurface Soil/Fill ..... 29

8.2.3 Soil Vapor ..... 30

8.3 Exposure Assessment ..... 30

8.3.1 Potential Human Receptors ..... 31

8.3.2 Exposure Pathways ..... 32

8.4 Toxicity Assessment ..... 33

8.5 Risk Characterization ..... 33

8.5.1 Current/Future No Remediation/No Development Scenario ..... 34

8.5.2 Future Scenario No Remediation ..... 35

8.5.3 Future Scenario Remediation ..... 36

8.6 Uncertainty Analysis ..... 38

8.7 Summary and Discussion ..... 38

**9. Conclusions and Recommendations ..... 39**

9.1 Conclusions ..... 39

9.1.1 Soil Vapor ..... 39

9.1.2 Surface Soil/Fill ..... 40

9.1.3 Subsurface Soil/Fill ..... 41

9.1.4 Groundwater ..... 42

9.2 Recommendations ..... 43

## FIGURES

**Figure 1** – Site Location Map
**Figure 2** – Aerial Photograph Showing the Site and Surrounding Area
**Figure 3** – Site Plan
**Figure 4** – Soil Vapor Point Detail
**Figure 5** – Section A-A'
**Figure 6** – Section B-B'
**Figure 7** – Section C-C'
**Figure 8** – Groundwater Elevations and General Flow Directions
**Figure 9** – Proposed Development Site Plan
**Figure 10** – Conceptual Site Model

## TABLES

**Table 1** – Summary of PID Field Screening Results – Surface Soil Samples
**Table 2** – Summary of Monitor Well Construction Detail
**Tables 3A-3B** – Groundwater Laboratory Analytical Results Summary
**Tables 4A-4C** – Soil Vapor Sample Laboratory Analytical Results Summary
**Tables 5A-5E** – Subsurface Soil Laboratory Analytical Results Summary
**Tables 6A-6B** – Surface Soil Laboratory Analytical Results Summary
**Table 7** – Groundwater Monitoring Data and Elevations
**Table 8** – Shallow and Subsurface Soil Data Summary
**Table 9** – Chemical Release Mechanisms/Exposure Pathways in the Absence of Site Remediation
**Table 10** – Non-Carcinogenic Health Effects of Chemicals of Potential Concern
**Table 11** – Carcinogenic Health Effects of Chemicals of Potential Concern
**Table 12** – Summary of Human Health Evaluation Risk Characterization

## APPENDICES

**APPENDIX A** – Westchester Soil Survey Map
**APPENDIX B** – Prior Environmental Reports (CD)
**APPENDIX C** – Borehole Geologic Logs and Monitor Well Construction Details
**APPENDIX D** – Laboratory Analytical Reports and Data Validation Review Reports

# 1. Introduction

## 1.1 Purpose and Scope

On behalf of Bilwin Development Affiliates LLC, HydroEnvironmental Solutions, Inc. (HES) has prepared this Remedial Investigation (RI) Report to summarize the results of the Remedial Investigation (RI) performed at 109-125 Marbledale Road (Site), located on the west side of Marbledale Road in the Village of Tuckahoe, Westchester County, New York. The Site, which is located to the west of Marbledale Road, consists of approximately 3.45 acres of vacant land on two adjoining tax parcels [Section 35, Block 1, Lots 1.A-E (0.2 acres) and 1.A-T (3.25 acres)]. The Site is referred to as "Former Marble Quarry Landfill" and is subject to the Brownfield Cleanup Program (BCP) Site No. C360143. The Site location is shown on **Figure 1**.

BCP Volunteer Bilwin Development Affiliates, LLC (Bilwin) plans to remediate and redevelop the Site into a commercial hotel and separate restaurant units and associated parking areas. The Site RI was performed in accordance with the requirements of the BCP and with approval and oversight provided by the New York State Department of Environmental Conservation (NYSDEC) and the New York State Department of Health (NYSDOH).

The goal of this RI was to characterize the nature and extent of:

- The presence and magnitude of contaminants at the Site.
- The extent and composition, both physical and chemical, of overburden (fill/soil) material.
- The hydrogeologic characteristics (e.g., depth to saturated zone, proximity to drinking water aquifers, flood plains and wetlands).
- The potential for migration of contaminants from the Site, and whether possible future migration may pose a threat to human health or the environment.
- The preliminary identification of potentially feasible remedial alternatives.

This report summarizes the RI activities conducted and the findings from these field activities conducted at the Site from February through May 2015 by HES. Field activities were conducted in accordance with the NYSDEC-approved RI Work Plan for the Former Marble Quarry Landfill Site, submitted by HES in November 2014, and in accordance with the NYSDEC guidance document DER-10.

## 1.2 Site Description and Location

As shown on **Figure 2,** the Former Marble Quarry Landfill Site is situated on approximately 3.45-acres of land located 109 and 125 Marbledale Road in the Village of Tuckahoe, Westchester County, New York as shown on **Figure 2**. The two parcels comprising the Site are identified by the Village of Tuckahoe Tax Map as Section 35, Block 1, Lots 1.A-E (0.2 acre) and 1.A-T (3.25 acres). The Site is partially fenced on the southern, eastern, and northern sides. The Site is neighbored by industrial/commercial facilities to the north, south, and east and by residential properties to the west. The southern portion of the Site is covered with a poorly maintained asphalt cover, and the northern portion of the Site is covered by grass, brush, and weeds.

## 1.3 Site Background and History

Historically, the Site was used for commercial and industrial operations, first as a quarry, then a landfill, and most recently auto repair. Around the turn of the 20th century, the Site was used as a marble quarry. Mining operations ceased sometime around mid-century. In or about 1958, the quarry closed and the new owner entered into a lease agreement with the Village of Tuckahoe to “fill” the former quarry. From quarry closure in 1958 to 1978 it was used as a dump for several municipalities and local businesses in the surrounding area. Consequently, the former quarry was essentially turned into a landfill and was operated as such until it closed in 1978.

In or about 1978, the current owner purchased the Site and began using it for auto parking. In or about 1989, the Site was also used by a tenant for auto repair and car storage. An auto sales and service facility was subsequently established at 125 Marbledale Road, which is surrounded by the central portion of the subject Site. The building and site that was associated with auto repair is not part of the BCP Site. This building and the property is now being operated as a gym. Historically, the surrounding area was predominantly industrial and commercial businesses, including auto service.

## 1.4 Report Organization

Section 2 provides details concerning the physical characteristics of the Site area, including topography, demography, and the geologic setting. Section 3 summarizes the findings of previous investigations conducted at the Site, and Section 4 provides a description of the field activities conducted during this Site investigation including field methods and results. Section 5 provides the results of the hydrogeologic evaluation of the Site, and Section 6 provides the findings of the data usability and summary reports. Section 7 discusses the nature and extent of contaminant impacts in the soil vapor, surface and subsurface soil/fill, and groundwater at the Site. The human health risk

assessment and conclusions with recommendations are provided in Sections 8 and 9, respectively. References for investigations and literature cited in this report are provided in Section 10.

# 2. Physical Setting

## 2.1. Land Use and Demography

The Site is zoned "GC" (General Commercial), which is the appropriate zoning for the planned hotel and restaurant use. The properties surrounding the southern, eastern, and northern sides of the Site are zoned for light commercial/industrial use and the remaining western side is zoned for residential use. The Site currently consists of approximately 3.45 acres of vacant, undeveloped land.

The Site is bounded to the north by a parking lot; to the east by Marbledale Road and a brewery, gym, martial arts studio, and light industrial offices; to the south by a parking lot; and to the west by a steep rock face and residential properties.

## 2.2 Topography and Drainage

The Former Marble Quarry Landfill Site is located in the lower Hudson River Valley within the New England uplands physiographic province. Major topographic features of the province are the result of the variable nature of the underlying bedrock and periods of glaciation that created scoured uplands, glacial troughs, and reworked deposits of deep valley fill.

The surface topography within the Village of Tuckahoe is characterized by an elevated ridge of differentially eroded bedrock and mantle of unconsolidated sediment having a north to south trending axis of orientation. Radial surface water drainage flows from the rounded hilltops east toward the Hutchinson River and west toward the Bronx River drainage systems. Peak elevations within the Village range from a maximum of 350 to 400 feet above mean sea level (AMSL).

The Site is located on a gently sloping topographic valley between two rock ledges on either side of Marbledale Road. The elevation on the Site ranges from approximately 130 to 150 feet AMSL NAVD-88 (North American Vertical Datum – 1988). The topography of the Site directs local surface water drainage to the south/southeast with a regional westerly shallow groundwater component imparted toward the Long Island Sound.

However, based on the data and the site geology, the former excavated quarry bottom for what became landfill activity most likely acts as an impediment to off-site migration of the landfill materials within the footprint of the Site. Typically, groundwater flow through a bedrock aquifer is through secondary permeability features such as fractures. Thus, it is likely that off-site impacts from the underlying former marble quarry are impeded and limited by the flow through the bedrock regime.

## 2.3 Climate

The climate of Tuckahoe is characterized as temperate, maritime with weather patterns influenced by air masses and weather systems that originate over land areas of the North American continent. Cool, dry weather prevails when the airflow descends from the northwest. Conversely, warmer and more humid weather prevails when airflow comes from the south and southwesterly directions. The Site climate can be generally defined as follows:

- Average Annual Precipitation = 51.01 inches
- Average Summer High Temperature = 85.5° F
- Average Winter Low Temperature = 22.4° F

## 2.4 Soils

The Soil Survey of Westchester County identifies the soils on approximately 93% of the Site as Urban Land, which is defined as areas having 80 percent or more of the surface covered by asphalt, concrete, or buildings. Approximately 7% of the soils on Site are of the Chatfield-Charlton complex, which is characterized by hilly and very rocky soils and varying with depth from a fine to gravelly loam (Map and legend/descriptions attached in **Appendix A**).

Soil borings drilled at the Site encountered a soil profile generally consisting of brown fine to coarse sands, with silt and gravel and urban fill. This material is consistent with deposits identified in this area by the Surficial Geologic Map of New York, Lower Hudson Sheet (Cadwell et. al, 1989). According to the Surficial Geologic Map of New York, Lower Hudson Sheet (Cadwell, 1989), the Site is underlain by till deposited beneath a glacier. This deposit consists of poorly sorted diamict of variable textures. This unit has a variable thickness of 1 to 50 meters across the area mapped in the Lower Hudson Sheet.

There have been reports of highly toxic material dumped at the Site but the results of the RI reveal that contaminants are largely consistent with those present in a typical urban landfills.

## 2.5 Regional Geology and Hydrogeology

### 2.5.1 Regional Overburden Geology

The Surficial Geologic Map of New York identifies surficial geology at the Site as glacial till (Cadwell et. al., 1989). Based on subsurface data collected during drilling and soil excavation activities completed in close proximity to the Site, the native overburden consists of fine to coarse sand, silt, and poorly sorted gravel (till).

### 2.5.2 Regional Bedrock Geology

According to the Geologic Map of New York, Lower Hudson Sheet (Fisher, 1970), the Site is underlain by metamorphic bedrock defined as the Inwood Marble Formation. The Inwood Marble consists of Cambrian-Ordovician (approximately 488 million year old) dolomitic marble, granulite, and quartzite overlain by calcite marble (Fisher 1970). Boreholes advanced to refusal during the RI drilling program encountered bedrock from 8.0 ftbg to a maximum depth of 85.0 ftbg.

### 2.5.3 Regional Hydrogeology

Based on the regional topography, the groundwater flow in the vicinity of the Site is expected to flow to the southeast towards the Hutchinson River drainage system or southwest towards the Bronx River drainage system, both ultimately discharging into the Long Island Sound. However, based on the Site geology, groundwater flow in the marble bedrock is limited to movement through secondary permeability features such as fractures, bedding planes or dissolution cracks which is likely minimizing off-site impacts to the groundwater and these off-site waterbodies.

# 3. Summary of Previous Investigations

## 3.1 General

The following is a summary of previous environmental investigations performed at the Site. Information for this summary was obtained from reports, or portions of reports, compiled by HES. Copies of the reports and/or portions of reports are included on the CD-ROM diskette included in **Appendix B**.

## 3.2 Previous Investigations

Prior to implementing the 2015 RI investigation, all investigations were performed on the Site prior to being admitted into the BCP program. The following investigations were completed at the Site by HES:

A. April 2013 Phase II Environmental Site Assessment (ESA)

HES conducted a Phase II \Environmental Site Assessment (ESA) of the property in April 2013. This ESA was prepared in conformance with HES' April 19, 2013 work scope and NYSDEC rules and regulations in accordance with ASTM Standard 1527-05. All Phase II fieldwork was conducted by HES on May 6, 2013. To evaluate the Site, HES recommended that subsurface investigation work be conducted. HES prepared a detailed work scope and cost estimate to conduct the Phase II ESA and provided it to Bilwin Development Affiliates, LLC for review and approval. The following Phase II ESA field activities were completed:

- Drilling and installation of twelve soil borings and two temporary groundwater monitor wells at locations selected by HES;
- Collection of soil samples during drilling from all of the test borings for laboratory analysis for volatile organic compounds (VOCs), semi-volatile organic compounds (SVOCs) and inorganic compounds (metals and PCBs [polychlorinated biphenyls]) at a New York State certified laboratory;
- Collection of groundwater samples for VOC and SVOC analyses following drilling from two temporary monitor wells;

Results of this work demonstrated that the soil beneath the Site at several locations contained concentrations of VOCs, SVOCs and inorganic constituents above laboratory method detection limits (MDLs) and NYSDEC Soil Cleanup Levels (SCLs).

Groundwater was encountered at two boring locations to a maximum depth of 13 ftbg (feet below grade) and both groundwater samples collected for laboratory analysis contained concentrations of dissolved petroleum constituents above laboratory MDLs and NYSDEC Ambient Water Quality Standards (AWQS).

Based on field observations made during soil boring installation activities, HES concluded that the petroleum and metal constituents observed in the soil and petroleum constituents observed in the groundwater are related to landfilling of waste, historic fill that was used to backfill the Site and auto repair operations. Based on this conclusion and others made in the Phase II ESA report, HES recommended that the following additional work be completed at the Site:

- HES recommended any soil that is excavated due to new construction at the Site be removed and disposed of properly at a NYSDEC approved disposal facility due the fact that it would likely contain contaminants making it a special waste for purposes of disposal.

- HES recommended further delineation of contaminants in the soil or groundwater beneath the Site be conducted in order to determine the extent of the constituents of concern and their impact on future construction. Multiple monitoring wells and ground borings were needed to complete the delineation.

B. <u>September 2013 Phase I ESA</u>

Following completion of the April 2013 Phase II ESA at the Site, HES was retained by Bilwin to conduct a Phase I ESA. The Phase I ESA was conducted in order to provide the necessary environmental and historic information required to bring the subject Site into the NYSDEC BCP. The Phase I ESA revealed evidence of recognized environmental conditions in connection with the property including the following:

REC-1 – The presence of a significant amount of waste and fill on Site within the former open pit marble mines represents a REC because HES' prior Phase II ESA work demonstrated that the fill soils are impacted with metals and PAHs.

REC-2 – The former use of the property for petroleum bulk storage represents a REC because release(s) from tanks were documented in 2003 and cleaned up, but changes in the NYSDEC standards have led to residual contamination on-Site in excess of applicable standards.

REC-3 – The presence of drums and containers on the property and the improper storage of these containers represents a REC because there is a significant risk that these containers may have released their contents to the environmental media beneath the Site.

REC-4 The documented presence of the use, and release, of petroleum and/or hazardous substances from numerous adjacent sites surrounding the Site, especially those along Marbledale Road, represents a REC because a significant number of these are located at a higher elevation than the Site and this contamination may have impacted the environmental conditions of the Site.

Based on the findings of the Phase I ESA, obvious conditions that were indicative of potential contamination or past releases were identified at the Site. As such, HES recommended the following work be completed to assess the identified RECs:

- Regarding REC-1, HES previously recommended that additional Phase II ESA activities be conducted to further assess the Site, including the filled portion of the former open pit mine on the northern portion of the property, which was not assessed during the April 2013 Phase II ESA.

- Regarding the other RECs identified as a part of the Phase I ESA in connection with the Site, HES recommended that additional Phase II ESA activities be conducted to determine the nature and extent of any impacted environmental media.

C. January 2014 Additional Phase II ESA

Following the completion of the Phase I ESA and based on recommendations therein, HES conducted a second Phase II ESA on the northern half of the Site.

HES completed an Additional Phase II ESA at the Site in conformance with HES' October 14, 2013 work scope, NYSDEC rules and regulations, and in accordance with ASTM Standard 1527-05 on October 25, November 4, 5 and 20, and December 12, 2013. The results of this supplemental Phase II investigation were summarized in the Additional Phase II ESA dated January 30, 2014.

To evaluate the Site, HES recommended that additional subsurface investigation work be conducted on the northern half of the Site, which was not investigated during the May 2013 Phase II ESA outlined above. The following Additional Phase II ESA field activities were completed:

- Drilling and installation of an additional twelve soil borings at locations selected by HES using the Geoprobe® drilling method, and three test borings using the hollow stem auger and air rotary drilling methods;
- Collection of soil samples during drilling from six of the twelve Geoprobe® test borings and the three hollow stem auger test borings for laboratory analysis for VOCs, SVOCs, and inorganic compounds (metals and PCBs) at a New York State certified laboratory;
- Installation of three permanent monitoring wells,
- Collection of groundwater samples for VOCs, SVOCs, and herbicides and pesticides analyses following installation of the three permanent monitoring wells;
- Collection of groundwater levels from the three permanent wells on two occasions;
- Preparation of the January 2014 Phase II ESA Report.

Results of this work revealed that the soil beneath the Site at several locations contained significant concentrations of VOCs, SVOCs and inorganic constituents above laboratory MDLs and NYSDEC UUSCOs.

Groundwater was encountered at the three permanent monitor well locations at depths ranging from 23.14 ftbg to 43.56 ftbg and the groundwater samples collected for laboratory analysis contained concentrations of dissolved petroleum constituents above laboratory MDLs and NYSDEC AWQS. Copies of the two Phase II ESAs and the Phase I ESA conducted at the Site are included on a CD ROM in **Appendix B**.

# 4. Remedial Investigation Methods

## 4.1 General

The field activities discussed within this section consist of those tasks performed for the RI between February and August 2015. All tasks were conducted in accordance with the NYSDEC approved Remedial Investigation Work Plan or RIWP (HES, November 2014). Per a request from the NYSDOH and NYSDEC dated August 13, 2015, HES installed six (6) additional soil vapor probes along the eastern Site boundary.

The remedial investigation included an environmental sampling program that required completion of the following field tasks:

- Advancement of thirteen (13) soil borings;
- Collection and analysis of twenty-five (25) subsurface soil samples
- Installation of six (6) groundwater monitoring wells and sampling of nine (9) groundwater monitoring wells (three pre-existing);
- Installation and sampling of eighteen (18) soil vapor probes; and,
- Collection of and analysis of ten (10) surface soil samples.

The boring and sampling locations are provided on **Figure 3**. Discussion of the purpose, methodologies, and results of each of the investigative activities performed under the RI are presented below. Analytical results are presented and discussed in **Section 7.0**.

The sampling program was completed in accordance with the NYSDEC approved RI Work Plan. Soil, groundwater and soil vapor samples were analyzed by Phoenix Environmental Laboratories, Inc. (Phoenix). Phoenix is a New York State certified laboratory located in Manchester, Connecticut. As required by the Remedial Investigation Work Plan, third party validation of Phoenix's analytical results was provided by Premier Environmental Services of Merrick, New York. The results of data validation are presented in **Appendix D**. Validated analytical results for the sampled media are discussed in **Section 7: Site Contaminant Characterization**.

## 4.2 Soil Boring Program

### 4.2.1 Purpose

A soil boring program was initiated on February 27, 2015 and completed on May 30, 2015. The drilling program was conducted to characterize the physical and chemical composition of the Site overburden soils and/or fill materials through the collection and analysis of subsurface soil and/or fill samples.

### 4.2.2 Methodology

A total of twenty three (23) soil borings were completed by SoilTesting, Inc. a licensed drilling contractor from Oxford, Connecticut. Boring operations were overseen by HES. Boring locations are shown on **Figure 3**.

Thirteen (13) soil borings, designated TB-1 through TB-13, and six (6) groundwater monitoring wells designated MW-4 through MW-9, were advanced through fill/overburden deposits using hollow stem auger and air rotary drilling methods. Soil samples were collected in accordance with ASTM D1586 and the Standard Penetration Test (SPT). Two foot long 2-inch diameter split spoon samples were driven by a 140 pound weight falling 30-inches. SPT consist of the number of hammer blows required to drive the sampler 6-inches. The SPT values were recorded on the Geologic Logs in **Appendix C**.

Total volatile organic vapors detected in the soil samples were measured using a calibrated RAE® Mini-Rae 3000 photo-ionization detector (PID) and the headspace method and are listed on the Geologic Logs in **Appendix C**. Additionally, lower explosive limit (LEL) and methane concentrations were monitored at each borehole during drilling activities as a safety precaution.

### 4.2.3 Results

Thirteen soil borings (TB-1 through TB-13 on **Figure 2**) were advanced to depths ranging from 8 ftbg at test boring TB-3 to 85 ftbg at test boring TB-6. Based on the subsurface data collected, thick fill deposits exist beneath the Site, as expected by Site history and prior environmental investigations. Historic fill materials were observed at all thirteen of the boring locations.

PID field screening measurements for total VOCs were recorded on the Geologic Logs and are recorded on the Geologic Logs in **Appendix C**. Elevated VOC vapor readings (greater than 20 parts per million or ppm) were detected at test borings TB-2, TB-4 and TB-6. The highest PID readings were observed at test boring TB-6 at a depth of 56 to 60 ftbg and concentrations ranging from 230 ppm to 287 ppm.

A description of the geologic conditions encountered during the drilling program is provided in Section 5. All soil borings, other than those developed into groundwater wells, were backfilled by tremie grouting the borehole from the total depth to the ground surface with a cement/bentonite slurry.

## 4.3 Subsurface Soil Sampling & Analyses

### 4.3.1 Purpose

The purpose of the subsurface soil sampling an analytical program was to facilitate characterization of the physical and chemical conditions of the subsurface fill materials at the Site.

### 4.3.2 Methodology

A minimum of two representative soil samples were submitted for chemical analysis from each borehole advanced during the investigation with the exception of TB-3. TB-3 was limited to one shallower soil sample due to poor spoon recoveries and the occurrence of shallow bedrock. Otherwise, two soil samples were collected from each deep soil boring, at the occurrence of the highest field screening readings for VOCs, visual staining, and at the observed groundwater interface. Upon retrieval of a sample, the soils collected in each split spoon were screened with a PID and logged by a HES geologist. The split spoon was decontaminated prior to each use using a solution of Alconox and water.

All samples were collected in laboratory supplied sample jars and placed in an iced cooler. All soil samples were submitted under chain of custody to Phoenix for analysis of TCL VOCs, TCL SVOCs, TAL metals, PCBs, and cyanide.

### 4.3.3 Results

A total of 25 subsurface soil samples were collected from the 13 soil borings and submitted to the analytical laboratory. Analytical results for the soil samples are discussed in detail in **Section 7.0, Site Contaminant Characterization**. Laboratory analytical results are summarized on **Tables 5A** through **5E**.

## 4.4 Monitoring Well Installation

### 4.4.1 Purpose

Six (6) new permanent groundwater monitoring wells were installed during the RI to characterize water quality at the Site. The groundwater monitoring wells were designated MW-4 through MW-9. Existing groundwater monitoring wells MW-1

through MW-3 were installed prior to the RI for a total of nine wells on-Site. Groundwater was encountered in all of the groundwater monitoring wells at depths ranging from 18 to 33 feet below grade (ftbg).

#### 4.4.2 Methodology

The six (6) groundwater monitoring wells were installed in borings completed to depths ranging from 24 ftbg at monitoring well MW-9 to 37 ftbg at MW-8. The wells were constructed of 4-inch Schedule 40 20-slot PVC well screen and solid riser pipe. The annular space around each well was backfilled using No. 2 filter sand and a minimum of a 2-foot bentonite seal was placed on top of the sand pack. The remaining annular space was backfilled with drill cuttings. Each of the wells was finished with a minimum of a three foot stick inside a protective, locking steel casing set in a concrete collar. Construction details for the six (6) groundwater monitoring wells installed are included in **Appendix C**. Well construction details are also summarized on **Table 2**.

#### 4.4.3 Monitoring Well Development

Newly installed wells (MW-4 through MW-9) were developed to remove fine sediment inside the well casing. The development process is intended to provide groundwater sampling locations that will yield water samples that are representative of the groundwater quality at that location.

The wells were developed using a 1 horsepower Goulds submersible pump and dedicated polyethylene tubing. During development, well discharge water was monitored for field water quality parameters (i.e.: pH, specific conductivity, temperature, dissolved oxygen, and turbidity) using a Horiba multi-parameter water quality meter. The pump and water quality meter were cleaned in clean water and Alconox soap followed by a clean water rinse between wells.

### 4.5 Soil Vapor Characterization

#### 4.5.1 Purpose

In May 2015, HES installed and sampled soil vapor probes at twelve locations identified in the RIWP. In August 2015, six additional soil vapor probes were installed following the NYSDEC's review of draft data from the initial twelve soil vapor probes. The soil vapor sampling was performed in accordance with the NYSDEC-approved RI Work Plan and the October 2006 New York Department of Health (NYSDOH) Soil Vapor Guidance document. The soil vapor point locations are shown on **Figure 3**.

### 4.5.2 Methodology

A total of eighteen (18) soil vapor probes designated VP-1 through VP-18 were installed and soil vapor samples collected in accordance with the approved RIWP and as requested by the NYSDEC.

Each vapor point was installed by advancing a 2.25-inch diameter macrocore to a depth of six feet using a Geoprobe® 54DT. A 1-foot, 1/4-inch diameter stainless steel soil vapor screen was attached to a 1/4-inch (outer diameter) polyethylene tubing and was placed in the borehole with the sample point resting on the bottom of the borehole. A No. 1 silica sand filter pack was then installed in the borehole annulus to prevent clogging of the sample screen. Bentonite chips were placed on top of the filter pack and hydrated with water to create a low permeability seal at the top of the borehole. A soil vapor point construction detail is included on **Figure 4**.

In accordance with October 2006 NYSDOH Soil Vapor Guidance, an inverted plastic pail was used to create a shroud around the top of sample point. Helium gas was introduced into the shroud and the helium allowed to displace the ambient air inside the pail. A peristaltic pump and helium detector were used to evacuate soil vapor from the sample point. The effluent from the soil vapor sample point was screened for the presence of helium to demonstrate that the vapor point was adequately sealed from ambient air.

Prior to sampling, each vapor point was purged at a rate of approximately 200 milliliters per minute for a period of fifteen minutes using a peristaltic pump. The samples were collected using a six-liter, laboratory-certified summa canister. The summa canister was fitted with a pressure gauge, a particulate filter, and a flow controller. The flow controller was pre-calibrated by the laboratory to 0.1 L/min to collect a composite soil vapor sample over a one-hour time period.

To collect the sample, the polyethylene tubing was attached to the summa canister and the sample valve was opened. The pressure in the canister was checked and recorded to verify that a vacuum had been maintained. Changes in pressure were monitored during the sampling period of one hour to verify proper flow controller calibration and sampling rate. The vacuum remaining in the canister was recorded following the sampling event.

The soil vapor samples collected in the summa canisters were submitted under chain of custody to Phoenix for VOC analyses by USEPA Method TO-15.

### 4.5.3 Results

Analytical results for the eighteen soil vapor samples are discussed in Section 7.0, Site Contaminant Characterization. The laboratory analytical results are summarized on **Tables 4A** through **4C**.

## 4.6 Surface Soil Sampling Program

As part of the soil investigation, HES completed ten (10) shallow surface soil samples to a depth of 2 inches below grade, after removing vegetative cover. Soil samples were collected using a steel spade at the ten locations. The samples were sent for laboratory analysis as outlined below. Sampling locations are shown on **Figure 3**. PID field readings and soil descriptions are included in **Table 1**.

### 4.6.1 Purpose

A surface soil sampling program was conducted to evaluate the extent of organic/inorganic contamination in the shallow soil material at the surface of the Site. The surface soil data collected was used to evaluate potential human health risks.

### 4.6.2 Methodology

Soil samples were collected from the uppermost 2 inches of soil in about an 18-inch diameter area using a decontaminated steel spade. The shallow samples were placed into laboratory provided glass jars and submitted under chain of custody to York for TCL VOC, SVOC, PCBs, TAL Metals and cyanide analyses. The surface soil sampling locations are shown on **Figure 3**.

### 4.6.3 Results

Analytical results of the surface soil samples are discussed in Section 7.0. Laboratory analytical results are summarized on **Tables 6A** and **6B**.

## 4.7 Groundwater Sampling Program

### 4.7.1 Purpose

Groundwater samples were collected from the six (6) wells installed during the RI and from the three (3) existing wells that were installed during Phase II ESA activities. The purpose of the groundwater sampling program was to characterize groundwater quality beneath the Site in the former quarry fill material.

#### 4.7.2 Methodology

Groundwater samples were collected from nine (9) monitoring wells following the installation and development conducted in May 2015. An electric water level indicator was used to measure the depth to water in each well prior to sampling. The wells were then purged following low flow methods using an inertial pump (MW-1 through MW-3) or a submersible pump and flow through cell (MW-4 through MW-9). Samples were collected for TCL VOCs, SVOCs, TCL pesticides, and PCBs. During groundwater sampling, field parameters including temperature, pH, conductivity, dissolved oxygen and turbidity were collected and monitored using a Horiba multi-parameter water quality meter to ensure that a true groundwater sample was collected from each well.

#### 4.7.3 Results

Analytical results for the groundwater sample is discussed in detail in **Section 7.0, Site Contaminant Characterization**. Laboratory analytical results are summarized on **Tables 3A** and **3B**.

# 5. Hydrogeologic Evaluation

## 5.1 Introduction

The geology and hydrogeology of the Former Marble Quarry Landfill Site is described herein using data from previous Site investigations, hydrogeologic reference literature, and the most recent information collected from the soil borings and monitoring wells completed during the February through May 2015 Remedial Investigation.

The RI investigation consisted of the completion and sampling of a total of thirteen (13) soil borings, eighteen (18) soil vapor sampling locations, ten (10) surface soil samples, and nine (9) monitoring wells at the Site. **Figure 3** shows the location of all sampling points. Geologic Logs completed for the Remedial Investigation are provided in **Appendix C**.

## 5.2 Site Geology

In general, subsurface conditions at the Site consist of fill materials underlain by fine to coarse grained sand with trace to little silt and trace fine to medium gravel (till). Boring depths ranged from 8 feet to 85 ftbg during the Site investigation. The fill and till material are underlain by competent marble bedrock.

Fill Materials - Fill materials consist of cinders, ash, concrete, construction and demolition debris, metal (car parts) and miscellaneous debris that was historically disposed at the Site. Fill ranges from eight feet to nearly 90 feet in thickness across the former quarry Site, and a thin mantle of till overlying bedrock was encountered with depth in areas outside the backfilled quarry. Geologic cross sections were constructed across the Site using the subsurface information gathered during the RI at three locations in an east-west and north-south direction. Transect locations are shown on **Figure 3** and are included on **Figures 5** through **7**.

The geologic cross-sections compiled from the test boring data show the vertical extent of the fill material at the Site. The deepest area where the backfill was encountered was at test boring location TB-6 in the south central portion of the Site, where the material was observed to extend to 85 ftbg. The fill material appears to taper off, or become thinner beneath the Site from south to north as is indicated on Cross-Section B-B' (**Figure 6**) where fill material at the western side of the Site in the vicinity of TB-9 was only 12 to 15 feet thick. Additionally, the transverse Cross-Section C-C' (**Figure 7**) clearly illustrates the thinning of the fill material from south to north across the Site where fill thickness ranged from 85 ft thick on the south end of the Site at TB-6 to approximately 16 ft thick at test boring location TB-9. The geologic cross sections for the Site are included on **Figures 5** through **7**.

## 5.3 Site Hydrogeology

Depth to groundwater was measured in Site monitoring wells on May 11, 18 and 21, 2015. The depth to water measurements were referenced to the surveyed top of casing elevation for each well and the groundwater elevation was calculated. The groundwater monitoring and elevation data are summarized on **Table 7**.

Groundwater

Groundwater beneath the Site was observed at varying depths that ranged from 17.87 ftbg at MW-9 on May 11, 2015 to 34.51ftbg at MW-7 on May 21, 2015. Based on water level monitoring data, it appears that groundwater is located in two separate units: (1) the quarry fill material; and (2) the fractured marble bedrock beneath the Site. This is evidenced by the extreme variability in groundwater elevation across the Site. Groundwater elevation data for May 11 and 21, 2015 is plotted on **Figure 8**. The groundwater elevation on the northern third of the Site was between 127 ft and 132 ft in monitor wells MW-3, MW-8 and MW-9, while groundwater elevation on the southern two thirds of the Site ranged from 111 ft to 118 ft. Therefore, given the data set to date, it is difficult to contour the groundwater elevation data. However, the observed topography at

the Site dictates that groundwater flow in both the fill and bedrock units is to the south/southwest as indicated by the arrows on **Figure 8**.

# 6. Data Validation/Usability

Environmental samples were collected for the Site soil and groundwater media during the Remedial Investigation sampling events, as summarized above in **Section 4**. All analyses were performed by Phoenix Environmental Laboratories of Manchester, Connecticut in accordance the protocols required by Part 365 Tier II

Phoenix analyzed the soil, groundwater, and soil vapor samples collected by HES.

Environmental Data Services, Inc. (EDS) of Williamsburg, Virginia, and Premier Environmental Services of Merrick, New York, both qualified data validators, performed third-party validation of the subsurface vapor quality data, soil and groundwater analytical results. The data validation was conducted in accordance with the guidelines established by NYSDEC's Data Usability Summary Review (DUSR) process. The DUSR process was performed to provide a determination of whether the data meets the project specific criteria for data quality and data use.

Laboratory data summary forms were reviewed by the validator for application of validation qualifiers, per the USEPA Region 2 validation SOPs and the USEPA National Functional Guidelines for Data Review, with consideration of the requirements of the project Work Plan. The following criteria were reviewed:

- Laboratory narrative discussions
- Case narratives
- Custody Documentation
- Holding times
- Surrogate and internal standard recoveries
- Matrix spike recoveries/duplicate correlations
- Field duplicate correlations
- Preparation/calibration blanks
- Matrix spiked blanks/laboratory control samples
- Calibration/CRI/CRA standards
- ICP interference check standards
- ICP serial dilution correlations
- Method compliance
- Sample result verification

Data Review Reports were prepared for sample delivery groups (SDGs) and are attached to this report as **Appendix D**. The Data Review Reports provide copies of the laboratory analytical results and descriptions of the criteria used to review the laboratory results and supporting quality control documentation. As referenced in the tabulated summary tables in report Section 3, Section 7 and Form 1's in **Appendix D**, all data packages were deemed usable by the data validator. The usability of the data, as assessed by the data validator is presented in detail in the following sections. With the exception of historical investigation data, the data summary tables presented in Section 7 and **Appendix C** of the report use analytical results that have been validated, and when used in conjunction with historical data, provide the basis for Site evaluation and recommendations. A discussion of validated analytical results for qualified environmental media is presented below.

The soil samples were analyzed for full TCL VOCs, TCL SVOCs, TAL metals, and cyanide. The nine (9) groundwater samples collected at MW-1 through MW-9 were submitted for TCL VOCs, TCL SVOCs, TCL Pesticides and PCBs.

A duplicate sample and field and trip blanks were collected for the groundwater sampling event. Matrix spike and matrix spike duplicate (MS/MSD) samples were collected for all media sampled except for soil vapor.

Soil samples collected from RI soil borings were analyzed for target compound list (TCL) VOCs, TCL SVOCs, target analyte list (TAL) metals, polychlorinated biphenyls (PCBs) and cyanide at all subsurface soil test boring locations. The twenty-five (25) test boring soil samples collected were analyzed for TCL VOCs and SVOCs, TCL PCBs, TAL Metals, and cyanide. A duplicate sample and field and trip blanks were collected during the deep soil sampling program.

## 6.1 Validated Surface Soil Results

The April 2015 surface soil sampling event consisted of one SDG, identified as GBJ07743. This SDG consisted of 10 surface soil samples, one duplicate sample, and field and trip blanks.

All samples collected and received by the laboratory during the April 2015 sampling event were received within the allowable temperature range for cooler packed samples (between two and six degrees centigrade) established by the NYSDEC-ASP. Established holding times for extraction and analysis were met for all samples. No additional issues were identified regarding sample receipt or holding times for the March SDGs. The surface soil data was deemed suitable for decision making processes for this BCP site.

## 6.2 Validated Subsurface Soil Results

The March 2015 subsurface soil sampling event consisted of five (5) SDGs, identified as GBJ04209, GBJ03570, GBH82998, GBH79483 and GBH78390. These SDG packages consisted of 25 surface soil samples, one matrix spike and matrix duplicate sample, and field and trip blanks.

All samples collected and received by the laboratory during the March 2015 sampling event were received within the allowable temperature range for cooler packed samples (between two and six degrees centigrade) established by the NYSDEC-ASP. Established holding times for extraction and analysis were met for all samples. No additional issues were identified regarding sample receipt or holding times for the March through August SDGs. The subsurface soil data was deemed suitable for decision making processes for this BCP site.

## 6.3 Validated Groundwater Results

Groundwater samples were also collected and analyzed for VOCs, SVOCs, pesticides, and PCBs. The May 2015 groundwater sampling events consisted of two Sample Delivery Groups (SDGs), identified as GBJ20803 and GBJ121609. The SDGs consisted of a total of nine (9) monitor wells plus a field and trip blank, matrix spike and matrix spike duplicates were obtained for QA/QC purposes.

All samples collected and received by the laboratory during the May sampling event were received in good condition under intact custody seals. Established holding times from collection to analysis were met for all samples. Internal QC checks that included standard recoveries and calibration checks were within acceptable range criteria.

Duplicate samples were collected from monitor wells MW-5 and MW-9 and the two samples contained comparable detections of specific compounds. No additional issues were identified therefore, no data qualifiers were necessary for groundwater analytical results. Thus, the groundwater data was deemed suitable for decision making processes for this BCP site.

## 6.4 Validated Soil Vapor Results

The May and August 2015 soil vapor sampling events consisted of three Sample Delivery Groups (SDGs), identified as GBJ18696, GBJ22295 and GBJ1714. The SDGs consisted of a total of eighteen (18) summa canisters plus two field duplicate samples obtained for QA/QC purposes. The soil vapor samples were analyzed for VOCs by US EPA Air Toxics Method T0-15.

All samples collected and received by the laboratory during the May sampling event were received in good condition under intact custody seals. Established holding times from collection to analysis were met for all samples. Internal QC checks that included standard recoveries and calibration checks were within acceptable range criteria.

The duplicate sample was collected from sampling point VP-5 and the two samples contained comparable detections of specific compounds. No additional issues were identified therefore, no data qualifiers were necessary for soil vapor analytical results. Thus, the soil vapor data was deemed suitable for decision making processes for this BCP site.

# 7. Site Contaminant Characterization

## 7.1 Introduction

The nature and extent of contamination at the Former Marble Quarry Landfill Site was characterized through collection and analysis of surface and subsurface soil/fill, groundwater, and soil vapor samples as part of this Remedial Investigation. Sampling methodologies were performed in accordance with the NYSDEC and NYSDOH-approved Remedial Investigation Work Plan (RIWP) for the Former Marble Quarry Landfill Site (HES, 2014) and in compliance with DER-10. Sampling protocols and methodologies for each sampled media are described in Section 4.0 of this report. Subsurface soil/fill and groundwater samples collected during the RI sampling events completed during February through May 2015 were submitted for analyses under chain-of-custody to Phoenix. Soil vapor samples collected during the investigation were also submitted for analyses under chain-of-custody to Phoenix. Services provided by the laboratory were performed in accordance with the most current SW-846 and ASP2000 analytical methods and protocols. **Appendix D** contains raw analytical data (Form 1's) for each sample analyzed for this RI. Tabulated analytical data summarized in this section includes sample results from the most recent data collected by HES.

Sampling locations and frequency of collection were based on observed Site conditions and review of the historical environmental data described in Section 3. Sampling locations for all media are provided on **Figure 3**. Subsurface soil/fill samples were ultimately collected from a total of (13) subsurface and ten (10) surface investigation soil borings.

The recent RI included collection of eighteen (18) soil vapor samples, twenty-five (25) subsurface soil samples, ten (10) surface soil samples and nine (9) groundwater samples

from nine (9) permanent groundwater monitoring wells. Analytical results that included both historic and 2015 investigation data were utilized for Site contaminant characterization purposes. The results are discussed in this section and are presented in **Tables 3** through **6** and Sections 7.1 through 7.4 herein.

Analytical results for the investigations were compared to the following standards and criteria:

- Subsurface and surface soil/fill data were compared to the NYS Recommended Soil Cleanup Objectives (Track 1 Unrestricted and Track 2 Restricted Residential) (NYSDEC 6 NYCRR Part 375-6.8(a-b), 2006).
- Groundwater data were compared to NYSDEC Class GA groundwater standards and guidance values (Ambient Water Quality Standards [AWQS]), (6 NYCRR Part 360) (NYSDEC, 1998).
- As stated in Section 3.2.5 of the October 2006 New York State Department of Health Soil Vapor Guidance Document ("NYSDOH Guidance Document"), New York State does not have any standards, criteria or guidance values for concentrations of VOCs in subsurface vapors.

## 7.2 Subsurface Soil Vapor

VOC vapors were detected at all eighteen (18) soil vapor sampling locations. The VOCs that are included in the NYSDOH Guidance Document Vapor Matrices; namely, vinyl chloride, carbon tetrachloride, 1,1,1-trichloroethane, tetrachloroethylene (PCE), and trichloroethylene (TCE) were all detected at the Site. However, since there are no on-Site structures, no indoor air and sub-slab sampling could be conducted.

As indicated on **Tables 4A** through **4C**, widespread and numerous soil vapor detections were observed at all eighteen soil vapor sampling points. The maximum VOC concentrations detected from the 18 soil vapor samples collected across the Site included dichlorodifluoromethane at a concentration of 173,000 µg/m$^3$ (micrograms per cubic meter) in VP-15, 1,2-dichlorotetrafluoroethene at a concentration of 344,000 µg/m$^3$ in VP-15, and trichlorofluoromethane at a concentration of 198,000 µg/m$^3$ in VP-16. In addition, VOCs associated with petroleum hydrocarbons including benzene, toluene, ethylbenzene, and total xylenes (BTEX compounds) were detected, and are pervasive throughout the Site. VOCs associated with solvents including 1,1,2,2-tetrachloroethane and 1,1-dichloroethene were detected at most soil vapor sampling points. While no specific soil vapor criteria exist in New York State to compare these specific compounds detected in subsurface soil, the collective soil vapor results indicate that the historic disposal of waste material has impacted the soil vapor across the Site, and remedial

engineering controls will need to be incorporated into any proposed building, including a soil vapor barrier and vapor mitigation system such as an active, negative air pressure sub-slab depressurization system (SSDS), to mitigate the potential for vapor migration through and into on-Site structures. The subsurface soil vapor sampling results are summarized on **Tables 4A** through **4C** and the sampling locations are shown on **Figure 3**.

Vapor Intrusion Pathway Assessment

The NYSDOH guidance document considers concentrations of VOCs in both sub-slab soil vapor and indoor air in order to identify requirements for reducing the potential for exposures related to soil vapor intrusion. Based on the concentrations of VOCs (including TCE and PCE) detected in soil vapor at the Site, the human health assessment discussed in Section 8 includes a soil vapor intrusion pathway. Additionally, given the pervasive presence of VOCs in the soil vapor across the Site, vapor mitigation measures (i.e.: sub-slab depressurization system) will need to be considered as part of the proposed future remedy.

## 7.3 Surface Soil Results

Chemical analyses of ten (10) surface soil samples collected at the Site during the 2015 RI identified select SVOCs (i.e. PAHs) and metals at concentrations that exceed NYSDEC Unrestricted Use Soil Cleanup Objectives (UUSCOs). The 2015 RI samples were collected across the Site randomly at a sampling depth of 0-0.17 ftbg to provide Site-wide coverage as shown on **Figure 3**. PAHs, including benzo(a)pyrene, benzo(b)fluoranthene, and chrysene were detected above UUSCOs. Sampling locations SS-2, SS-6, SS-7 and SS-8 revealed exceedances for PAHs. Specifically, benzo(a)fluoranthene exceeded the applicable UUSCO at surface soil sampling locations SS-2 and SS-6 through SS-8, and benzo(a)pyrene, benz(a)anthracene and chrysene exceeded the applicable UUSCOs at SS-8.

Metals were detected above applicable UUSCOs at surface soil sampling locations SS-1 through SS-3, SS-6 and SS-8. Copper exceeded the UUSCO at soil sampling locations SS-1 through SS-3. Lead exceeded the UUSCO at sampling locations SS-2, SS-3, SS-6 and SS-8. Mercury exceeded the UUSCO at surface sampling locations SS-2 and SS-3.

With the exception of acetone, often a laboratory artifact, VOCs were not detected in surface soil samples at concentrations in excess of any NYSDEC SCOs. It is important to note, however, that acetone was also found in a number of subsurface samples

described below. The surface soil sampling analytical data are summarized on **Tables 4A** through **4C** and the sample locations are shown on **Figure 3.**

## 7.4 Subsurface Soil Results

Chemical analyses of twenty-five (25) subsurface soil samples collected at the Site identified VOCs, SVOCs, metals and PCBs at concentrations that exceed NYSDEC UUSCOs.

The subsurface soil samples were collected from borings advanced during the RI drilling program. Analytical results for the subsurface soils collected by HES are summarized in **Tables 5A** through **5E**.

Volatile Organic Compounds (VOCs)

As shown on the summary **Tables 5A** through **5E**, VOCs were detected in subsurface soil samples at concentrations in excess of NYSDEC Track 1 and 2 SCOs. Concentrations of acetone in excess of the applicable UUSCO were detected at test boring locations TB-3 (2-4 ftbg), TB-4 (24-26 ftbg and 30-32 ftbg), TB-6 (6-8 ftbg), TB-9 (7-9 ftbg), TB-12 (4-6 ftbg and 28-30 ftbg) and TB-13 (26-28 ftbg). Benzene was detected above the applicable UUSCO at test boring TB-6 (6-8 ftbg). Toluene was detected above the applicable UUSCO at test boring locations TB-6 duplicate (6-8 ftbg) and TB-7 (10-12 ftbg). Total xylenes were detected above the UUSCO at test boring locations TB-6 duplicate (6-8 ftbg) and TB-10 (32-34 ftbg).

SVOCs

SVOCs were detected in soil samples collected during the February through May 2015 RI drilling and sampling program (**Tables 5A** through **5E**). Seven (7) SVOCs identified as polycyclic aromatic hydrocarbons (PAHs) were detected in the subsurface soil at concentrations in excess of NYSDEC Residential SCOs.

Review of **Tables 5A** through **5E** indicates the following:

- Elevated concentrations of benzo(a)anthracene exceeding the Restricted Residential SCO (RRSCO) of 1,000 µg/kg were identified in soil samples collected at soil borings TB-2 (5,600 µg/kg at 18-20 ftbg), TB-6 (2,700 µg/kg at 4-8 ftbg), TB-9 (3,200 µg/kg at 2-4 ft), TB-9 (2,200 µg/kg at 7-9 ft), TB-10 (4,500 µg/kg at 4-6 ftbg and 3,500 µg/kg at 32-34 ftbg), TB-11 (2,800 µg/kg at 4-6 ftbg and 3,700 µg/kg at 21-23 ftbg) TB-12 (3,400 µg/kg at 4-6 ftbg) and TB-13 (5,900 µg/kg at 4-6 ftbg).

- Elevated concentrations of benzo(a)pyrene determined to exceed the applicable RRSCO of 1,000 µg/kg were identified in the soil samples collected at eight (8) of thirteen (13) soil boring locations including TB-2, TB-6, TB-8, TB-9, TB-10, TB-11, TB-12 and TB-13 where concentrations ranged from 2,000 µg/kg at TB-9 (7-9 ftbg) to 8,000 µg/kg at TB-11 (21-23 ftbg). The concentration of this compound at TB-11 exceeds Commercial SCOs (CSCOs).

- Benzo(b)fluoranthene was detected above the applicable RRSCOs at nine (9) soil sampling locations including test borings TB-2, TB-5, TB-6, TB-8, TB-9, TB-10, TB-11, TB-12 and TB-13. Concentrations of benzo(b)fluoranthene ranged from 2,300 µg/kg at TB-12 (4-6 ftbg) to 6,400 µg/kg at TB-13 (4-6 ftbg). The concentration of this compound at TB-13 exceeds CSCOs.

- Elevated concentrations of chrysene exceeding the Track 1 RSCOs of 1,000 µg/kg were identified in soil samples collected at soil sampling locations TB-2, TB-6 and TB-9 through TB-13 with concentrations ranging from 1,200 µg/kg at TB-9 (7-9 ftbg) to 6,000 µg/kg at TB-3 (2-4ftbg).

Metals

Based on the twenty-five (25) subsurface soil/fill samples collected during the RI, select TAL metals were detected at concentrations that exceed the UUSCOs. A comparison of analytical data with SCO criteria for metals is presented in **Tables 5A** through **5E**. Based on elevated concentrations of metals that exceed regulatory guidelines and background criteria, the following observations were made.

- Concentrations of chromium exceeded the applicable UUSCO of 30 mg/kg at test boring locations TB-3, TB-4, TB-6 and TB-10. Chromium concentrations ranged from 35 mg/kg at TB-6 (6-8 ftbg) to 85 mg/kg at TB-10 (32-34 ftbg) where RRSCOs were exceeded.

- Elevated concentrations of lead that exceed the applicable UUSCO of 63 mg/kg were identified at soil borings TB-2, TB-4, TB-6, TB-7, TB-10, TB-11 and TB-12. Concentrations of lead ranged from 162 mg/kg at TB-7 (6-8 ftbg) to 589 mg/kg at TB-4 (30-32 ftbg) where RRSCOs were exceeded.

- Mercury exceeded its UUSCO of 0.18 mg/kg at TB-4, TB-6, TB-7, TB-9, TB-10 and TB-13. Concentrations of mercury ranged from 0.2 mg/kg at TB-6 (6-8 ftbg) to 0.57 mg/Kg at TB-10 (32-34 ftbg).

- Other metals including copper, zinc and magnesium exceeded their applicable UUSCOs at multiple sampling locations across the Site.

The analytical data summarized in **Tables 5A** through **5E** depicted on the sample location map shown on **Figure 3,** identified elevated concentrations of selected heavy metals (chromium, lead, and mercury) in excess of NYSDEC UUSCOs and RRSCOs. Concentrations of metals that consistently exceeded regulatory standards were identified in soil samples across the majority of the Site.

Polychlorinated Biphenyls (PCBs)

PCB (Aroclor) 1254 was detected in the soil sample collected at borehole location TB-7 (10-12 ftbg) at 1.3 µg/kg. PCB Aroclor 1260 was detected at concentrations exceeding the RRSCO of 1000 µg/kg at test boring locations TB-4 (24-26 ftbg) at a concentration of 1,100 µg/Kg. Additionally, PCB Aroclor 1260 was also detected at TB-10 (4-6 ftbg and 32-34 ftbg) at 190 µg/kg and 130 µg/kg, respectively, exceeding the UUSCO of 100 µg/kg.

## 7.5 Groundwater Sample Results

Groundwater samples were collected and analyzed from nine (9) permanent monitor wells, which comprised the Site monitoring well network during the 2015 RI. Groundwater data for monitoring wells MW-1 through MW-9 is considered to be representative of Site-wide groundwater conditions.

The laboratory analytical results for groundwater samples are summarized on **Tables 6A** and **6B**. The groundwater laboratory analytical results were tabulated and compared to the NYSDEC Class "GA" Ambient Water Quality Standards (AWQS). The data identified concentrations of VOCs, pesticides and metals that exceeded the AWQS.

Volatile Organic Compounds (VOCs)

As shown on **Tables 6A** and **6B**, five (5) VOCs (benzene, dichlorodifluoromethane, isopropylbenzene, trichloroethylene (TCE), tetrachloroethene (PCE) and trichlorofluoromethane) were detected in the groundwater samples at concentrations that exceeded its AWQS (5 µg/L for all except benzene, which has a standard of 0.7 µg/L) during the May 21 and 22, 2015 RI sampling event. Benzene was detected in monitor well MW-9 at a concentration of 1.1 µg/L. Dichlorodifluoromethane was detected above its AWQS at monitor wells MW-2 and MW-7 at concentrations of 8.9 µg/L and 14 µg/L. Isopropylbenzene was detected above its AWQS at MW-3 at a concentration of 5.8 µg/L. Tetrachloroethene was detected above its AWQS in monitor wells MW-8 and MW-9 at

concentrations of 480 µg/L and 8.1 µg/L, respectively. Trichloroethene was detected above its AWQS at monitor well MW-8 at a concentration of 47 µg/L.

SVOCs

The results of groundwater sampling and analysis for SVOCs indicated that nine (9) different compounds (PAHs) were detected in the groundwater beneath the Site in excess of their respective its AWQS. These compounds include 2,4-dimethy;phenol, benz(a)anthracene, benzo(a)pyrene, benzo(b)fluoranthene, benzo(h)fluoranthene, chrysene, indeno(1,2,3-cd)pyrene, pyrene and phenol. The most prevalent PAHs detected in groundwater beneath the Site included benz(a)anthracene, benzo(a)pyrene, benzo(b)fluoranthene, which were detected in all but two of the wells, MW-2 and MW-8. Additionally, chrysene was also pervasive in the groundwater, and was detected in all but two wells (MW-2 and MW-8). The other five (5) PAHs detected in the groundwater were scattered randomly in wells across the Site. The results of SVOC analysis are summarized on **Tables 6A** and **6B**.

Pesticides

Concentrations of pesticides including 4,4' DDD, 4,4' DDE and Dieldrin were detected in the groundwater beneath the Site. The pesticide 4,4' DDD was detected in monitor wells MW-5 and MW-7 at concentrations of 0.038 and 0.097 µg/L, respectively. The pesticide 4'4DDE was detected in monitor wells MW-4, MW-5 and MW-6 at concentrations of 0.021, 0.051 and 0.025 µg/L, respectively. These values exceed their respective AWQS standards of 0.01 µg/L for each of these compounds. Dieldrin slightly exceeded its AWQS of 0.01 µg/L at monitor well MW-5 at a concentration of 0.012 µg/L. The results of pesticide groundwater analysis are summarized on **Tables 6A** and **6B**.

# 8. Human Health Evaluation

This section presents a qualitative evaluation of the potential for exposure and adverse human health effects associated with contaminants detected in sampled environmental media at the Site. The human health evaluation (HHE) supports the Brownfield Cleanup Program (BCP) Remedial Investigation (RI) performed at the Site from February through August 2015.

As shown on **Figures 1** and **2**, the Site is 3.45 acres located along the west side of Marbledale Road. The Site is currently bordered to the north, east and south by commercial buildings including a brewery, an auto body shop, a gym and martial arts studio and a large storage facility. The area to the west of the Site is occupied by residential buildings.

## 8.1 Overview

Although qualitative, the HHE follows the four-step process typically used to assess potential human health risk. This consists of:

Data Evaluation: relevant investigation sample data are compiled and evaluated to determine the usability of the data and to select contaminants of potential concern (COPC) representative of the environmental conditions at the Site that may cause potential human health risks.

Exposure Assessment: actual and/or potential chemical release mechanisms and migration pathways are evaluated and potentially exposed human populations, possible exposure pathways, and potential exposure routes are identified.

Toxicity Assessment: qualitative toxicity information is presented for each COPC identified for the Site.

Risk Characterization: the potential for adverse human health effects, in terms of both non-carcinogenic hazard and carcinogenic risk, is evaluated, currently and for the future scenario, in the absence of remedial action. The uncertainties associated with this qualitative evaluation are also briefly discussed.

## 8.2 Data Evaluation

The data evaluation focuses on the compilation of useable analytical data to assess the potential for human exposure and the selection of COPC.

Surface and subsurface soil/fill samples, soil vapor, and groundwater samples were collected at the Site in accordance with the *Brownfield Cleanup Program Remedial Investigation Work Plan, Former Marble Quarry Landfill Site* (RI Work Plan) (HydroEnvironmental Solutions, Inc., November 2014). In addition, historical surface and subsurface soil/fill, and groundwater data are available from the following investigations performed at the Site:

- Phase II Environmental Site Assessment (ESA) for 109-125 Marbledale Road Tuckahoe, New York (April, 2013).
- Phase I Environmental Site Assessment 109-125 Marbledale Road Tuckahoe, New York (June 2013).
- Additional Phase II ESA for 109-125 Marbledale Road Tuckahoe, New York (October 2013).

A brief summary of these prior investigations, and their pertinent findings, is presented in Section 3.0 of this RI Report. RI data sets for the samples collected from February 2015 through August 2015 are presented in **Appendix D** of this report. Data summary tables, which include the RI data, were organized to facilitate the data evaluation for this HHE. The data summary tables also present the screening criteria used to select COPC or to evaluate the detected concentrations in each environmental medium, as discussed below. This process identifies those COPC which, if exposed to in high enough doses, may pose potential risk to human health.

Selection of Media of Concern: The Remedial Investigation performed in 2015 revealed the thickness of the waste fill layer ranges from 21 to 85 feet across the Site in the former marble quarry, and up to 8 feet outside the former marble quarry area. Surface and subsurface soil/fill were identified as environmental media of concern because they are or may become, in the future, readily accessible to human contact if left uncapped. Soil vapor was identified as an environmental medium of concern because of the potential for volatile organic compounds (VOC) detected in soil/fill to migrate into indoor air of future buildings. **Tables 4** through **6** present a list of all available surface and subsurface soil/fill and soil vapor samples included in the data evaluation for this HHE. **Figure 3** depicts all of the sampling locations at the Site.

Groundwater was not included as an environmental medium of concern in this HHE, because human exposure to the contaminated subsurface groundwater is unlikely. Potable drinking water is provided to the Site, residences in the area, and all building occupants in the vicinity of the Site by the Village of Tuckahoe. In addition, the depth to groundwater at the Site ranges from 18 to 33 ftbg at the Site. At this depth, it is not expected that construction/utility workers would have direct contact exposure to groundwater at these depths during future construction or excavation activities.

Selection of COPC: The following sub-sections describe the surface soil/fill, subsurface soil/fill, and soil vapor data, and identify the COPC in each environmental medium.

COPC in soil/fill were selected by comparing the maximum detected chemical concentrations to the NYSDEC's soil cleanup objectives (SCOs) for unrestricted land use, restricted residential, and restricted commercial use in the NYSDEC regulations at 6 NYCRR Part 375-6.8(a-b), 2006). The SCOs are chemical-specific, risk based concentrations in soil derived to be protective of receptors (adults and children) in buildings on the Site. The SCOs consider the ingestion, inhalation, and dermal contact exposure routes and are based on an excess lifetime cancer risk of $10^6$ (i.e., one in a million) and a non-cancer hazard quotient of 1 based on the different number of hours per day occupied by residents (24/7) vs. commercial occupants (8). The SCOs also consider background concentrations of chemicals in rural soils and maximum acceptable levels of chemicals in soils (e.g., the soil saturation concentration). Contaminant with maximum

detected concentrations greater than the corresponding SCOs were selected as COPC. Contaminants without a corresponding SCO were also selected as COPCs if above 50 ppm. Inorganic chemicals regarded as essential nutrients (i.e., calcium, magnesium, potassium, and sodium) are included in **Table 8**, however these inorganic chemicals were categorically eliminated as COPC.

New York State does not have criteria or established guidance values to evaluate standalone concentrations of VOCs in soil vapor. Since the NYSDOH does not advocate the use of a risk-based, screening level approach for evaluating soil vapor data, and there are presently no set standards in New York State for soil vapor, all detected VOCs in soil vapor were considered as COPC. However, with no specific criteria to compare detected concentrations to, any potential exposure to detected VOCs will be mitigated based on future proposed construction through sub-slab depressurization systems. Thus, the HHE tables did not include the results of soil vapor analysis.

### 8.2.1 Surface Soil/Fill

For the purposes of this HHE, surface soil/fill is identified as samples collected between the depths of 0-2 inches below ground surface (bgs). Ten total soil/fill samples collected at the Site were from within the 0-0.17 foot depth range (see **Table 8**).

**Table 8** presents a summary of the 10 surface soil/fill samples (plus duplicate) for the Site, with the frequency of detection and range of detected concentrations for each detected chemical. The ten (10) surface soil/fill samples collected in April 2015 were analyzed for Target Compound List (TCL) VOCs, SVOCs, and Target Analyte List (TAL) metals and PCBs.

The following contaminants were selected as COPC in surface soil/fill:

- SVOCs – benzo(a)anthracene, benzo(a)pyrene, benzo(b)fluoranthene, chrysene, and indeno(1,2,3-cd)pyrene.
- Metals – copper, lead, mercury, and zinc.

### 8.2.2 Subsurface Soil/Fill

For the purposes of this HHE, subsurface soil/fill is identified as samples collected at depths greater than 2 feet bgs. The soil/fill data set summarized on **Table 8** is composed of the following samples:

- Twenty-five (25) soil samples collected from February through May 2015, all of which were analyzed for TCL VOCs, TCL SVOCs, TAL Metals, cyanide and PCBs.

**Table 8** presents a summary of all soil/fill data for the Site, with the frequency of detection and range of detected concentrations for each detected contaminant. The screening criteria are the NYSDEC's soil cleanup objectives for unrestricted use, residential use and restricted residential use for soil (NYSDEC, 2006).

The following contaminants were identified as COPC in subsurface soil/fill:

- VOCs – acetone, benzene, toluene, and total xylenes.
- SVOCs – benzo(a)anthracene, benzo(a)pyrene, benzo(b)fluoranthene, benzo(k)fluoranthene, chrysene, dibenzo(a,h)anthracene, and indeno(1,2,3-cd)pyrene.
- PCBs – Aroclor 1248 and Aroclor 1260.
- Metals – barium, lead, nickel, mercury, silver, and zinc.

#### 8.2.3 Soil Vapor

A total of 18 soil vapor samples were collected at the Site and analyzed for VOCs using EPA Method TO-15.

**Tables 4A** through **4C** presents a summary of the soil vapor data detections and concentrations for each detected VOC. It should be noted that New York State does not define soil vapor guidance levels other than inside a structure for seven specific contaminants, however, the NYSDOH Guidance document is not applicable in this case. Thus, the results summarized on **Tables 4A** through **4C** are not compared to any specific soil vapor criteria. Soil vapor results will be used as a screening tool to implement vapor mitigation measures in relation to the future proposed development at the Site.

### 8.3 Exposure Assessment

**Table 8** presents a summary of the COPC in surface and subsurface soil. The objective of the exposure assessment is to estimate the type of and potential for human exposure to the COPC that are present in, or migrating from, the environmental media of concern identified in Section 8.2 in a manner that can impact human health. The exposure assessment consists of the consideration of human populations that have the potential for exposure to conditions at the Site, currently and in the future, and an analysis of the pathways and routes by which receptors may be exposed to COPC at the Site.

The exposure assessment is based on Site visits and collected field data that was conducted from February through August 2015, and is facilitated through the development of a conceptual Site model (CSM), presented in **Figure 10**. The CSM is a graphic illustration that outlines chemical source areas, release mechanisms,

environmental media that currently show or may show the presence of chemicals in the future, possible exposure pathways to potentially exposed human populations, and potential exposure routes. It considers current Site conditions and surrounding land use, as well as the most likely future conditions and land use based on the proposed redevelopment of the Site.

Planned redevelopment of the Site is as a commercial development consisting of a multi-story hotel building with parking space and a restaurant and associated parking space. The majority of the Site will be covered by concrete slab, concrete sidewalks, or asphalt driveways and parking lots. Some landscaped areas are planned at this time along Marbledale Road and around and between the proposed buildings. These will be designed as vegetative cap areas in accordance with BCP requirements and will be covered with two feet of clean soil cover as required by DER-10 and applicable regulations for soil cover. **Figure 9** shows the proposed development plan along with all sampling locations.

### 8.3.1 Potential Human Receptors

#### 8.3.1.1 Current/Future No Remediation/No Development Scenario

The current/future no remediation/no development scenario addresses the current Site conditions that may exist into the future, in the event that no Site redevelopment or Site remediation occur. Based on current Site conditions and surrounding land uses in the vicinity of the Site, the following potential human receptor populations were identified:

- Trespassers: adults and children who may physically access the Site.

- Off-Site Residents: adults and children who may live in the residential structures located adjacent to the Site's western boundaries.

- Off-Site Commercial Occupants: parties who occupy the adjacent commercial properties on a temporary basis each day.

Based on the RI findings, trespassers may be exposed to surface soil contaminants through dermal contact with and incidental ingestion of COPC. The proposed development project will cap the Site and eliminate this exposure pathway but the current uncapped landfill surface enables this exposure pathway to exist.

Based on the RI findings, it is unlikely that COPCs have migrated off-Site in a manner that could impact off-site residents since the western and northern boundaries are both upgradient of the Site. The residential areas located to the west and east of the site are

significantly elevated above the level of the former landfill. The residential area north of the former landfill is located at a significant distance from the Site. However, the second set of soil vapor points and collected soil vapor data indicates that there is a potential for soil vapor intrusion to occur at the adjacent commercial buildings to the east, since there is no off-Site requirement to investigate and remediate these off-Site properties by the developer, it is recommended that the property owners of these adjacent sites perform their own sampling. As noted on the Site plans included herein, the occupants of off-site commercial buildings located to the east of the site may be potentially exposed to COPCs that may have migrated off-site, or there may be an existing off-site source of soil vapors which has yet to be determined under these properties since they had their own historic brownfield uses. The potential exposure to COPC is summarized by population type by the adjacent residential population is unlikely is summarized on **Table 12**.

### 8.3.2 Exposure Pathways

Contaminant release mechanisms, in the absence of remedial action, which are used in determining potential exposure pathways from COPC in environmental media of concern to potential human receptors at the Site, are summarized in **Table 9**. Potentially complete exposure pathways are noted, with descriptions justifying their inclusion.

#### 8.3.2.1 Future with Remediation and Redevelopment Scenario

The following exposure scenarios were evaluated based on the planned future commercial redevelopment of the Site and Site remediation. The future scenario includes foreseeable events such as construction and long term Site maintenance activities.

<u>Construction/Utility Workers:</u> During future post remediation and redevelopment improvements to the Site and long term post development maintenance of the Site by construction/utility workers, the following exposure pathways are identified as potentially complete during any subsequent subsurface excavation activities:

- Dermal contact with and incidental ingestion of COPC; inhalation of volatile and particulate COPC in subsurface soil/fill but these exposures can be controlled with implementation of the construction health and safety plan and the post construction Site Management Plan.

<u>On-Site Occupants:</u> Since the future redevelopment of the Site includes space for commercial use, Site workers and occupants are expected to be present. The majority of the Site will be covered by the Site-wide cap including concrete slab, concrete sidewalks, and asphalt for parking.

Therefore, Site workers and occupants would not have any direct contact with COPC in surface or subsurface soil/fill. There will no longer be an exposure pathway from the inhalation of VOCs in soil vapor since this exposure pathway will be eliminated as a result of vapor mitigation engineering controls that prevent migration of contaminated vapors into indoor air in future on-Site buildings.

Off-Site Commercial Occupants: After the future remediation and redevelopment of the Site, which will include the Site-wide cap and active vapor mitigation SSDS, the active on-Site vapor mitigation systems will ventilate/remove any contaminated soil vapor from underneath the buildings to prevent the indoor air quality from being affected by the contamination in soil vapor beneath the structure. In addition, off-Site occupants will be better protected from any potential exposures by drawing the vapors back onto the Site through the active, negative pressure SSDS. There can no longer be exposure from dust to the extent any could leave the Site from contaminated surface soils.

Off-Site Residents: As noted above, based on the distance and upgradient elevation differential between the Site and the residences located along the western site boundary, even under the current unremediated exposure pathway scenario, exposure to these off-Site structures is unlikely to occur. However, once the Site is remediated and redeveloped, whatever potential pathways could exist in the form of off-site dust, for example, would be eliminated through the remediation and redevelopment work.

## 8.4 Toxicity Assessment

For each COPC, critical non-carcinogenic and carcinogenic health effects, for oral and inhalation exposures, are presented in **Table 10** and **Table 11**, respectively. The critical health effects presented are those used by the USEPA (2008) to derive reference doses and reference concentrations (to assess the potential for chronic non-carcinogenic health effects) and slope factors (to assess carcinogenic risk), which are typically used in the quantification of human health risks

## 8.5 Risk Characterization

Based on Site conditions, observations, and the fact that the Site will be redeveloped, the likelihood of exposure and the potential for adverse human health effects are discussed for the identified receptor populations, below. The potential for exposure is classified as "Not Expected", "Possible", or "Likely". **Table 12** provides a summary of the qualitative HHE.

### 8.5.1 Current/Future No Remediation/No Development Scenario

The potential for exposure to COPC via the pathways and routes described in Section 8.3 is discussed below for each receptor population identified in the Current/Future No Remediation/No Development scenario, under the assumption that there will be no remediation and no Site redevelopment. Based on current Site conditions and land use, the potential human receptor populations are trespassers and off-Site residents.

Trespasser:

*Dermal contact with and incidental ingestion of COPC; inhalation of particulate COPC in surface soil/fill (site-wide)*

COPC have been identified in surface soil/fill and in subsurface soil/fill. There is field evidence that trespassing occurs on this site (e.g.: presence of a vegetable garden). Therefore, dermal contact with and incidental ingestion of COPC in surface soil/fill and subsurface soil/fill, and inhalation of particulate COPC adsorbed to fugitive dust released from surface soil/fill, are possible.

*Inhalation of volatile COPC that migrate from soil vapor to indoor air*

VOCs were detected in soil vapor samples, and all detected VOCs were considered COPC in soil vapor. However, at present, the Site is vacant with no occupied structures. Therefore, inhalation exposure to VOCs in soil vapor that migrates to indoor air via soil vapor intrusion on the Site is not possible at the present time given that there are no on-Site structures. However, as noted above, adjacent commercial buildings to the east could potentially be impacted by VOCs in soil vapor. Since these properties are located off-Site, it is recommended that the property owners of these sites investigate this pathway on their properties, particularly since there is the potential that an existing off-site source of VOCs may also be present on these sites from prior brownfield uses on these sites.

*Off-Site Commercial Occupants*:

*Off-Site Resident:*

*Inhalation of volatile COPC that migrate from soil vapor to indoor air of off-Site residences*

Off-Site residences are located directly west and across Marbledale Road to the east of the Site. Based on soil vapor results, the elevation differential, and distance from the Site to the nearest residences located west and east of the Site, it is unlikely that soil vapor will migrate off-Site in those directions. Therefore, inhalation exposure by off-Site

residences to VOCs in soil vapor that migrates to indoor air of off-Site residential buildings is not possible.

### 8.5.2 Future Scenario No Remediation

The potential for exposure to COPC via the pathways and routes described in Section 8.3 is discussed below for each receptor population identified in the future scenario, under the assumption that there will be redevelopment but no remediation at the Site. Based on the planned redevelopment of the Site for commercial use, the following human receptor populations for the future scenario are: construction/utility workers, Site workers, on-Site guests and patrons, and off-Site residents.

Construction/Utility Worker:

*Dermal contact with and incidental ingestion of COPC; inhalation of particulate COPC in surface soil/fill*

Site improvement and/or maintenance-related excavation or grading work could lead to contact with surface soil/fill. Therefore, dermal contact with and incidental ingestion of COPC in surface soil/fill, and inhalation of windblown or mechanically driven COPC adsorbed to fugitive dust released from surface soil/fill, are likely. Such exposure would be limited to the construction/maintenance period.

*Dermal contact with and incidental ingestion of COPC; inhalation of volatile and particulate COPC in subsurface soil/fill*

Site improvement and/or maintenance-related excavation or grading work could lead to contact with subsurface soil/fill. Therefore, dermal contact with and incidental ingestion of COPC in subsurface soil/fill, and inhalation of volatile and windblown or mechanically driven COPC adsorbed to fugitive dust released from subsurface soil/fill, are likely. Such exposure would be limited to the construction/maintenance period.

Site Worker:

*Inhalation of volatile COPC that migrate from soil vapor to indoor air of future on-Site buildings*

VOCs were detected in soil vapor samples, and all detected VOCs were considered COPC in soil vapor. The planned redevelopment of the Site is for commercial and parking space. Therefore, inhalation exposure by Site workers to VOCs in soil vapor that migrates to indoor air is possible without a vapor barrier incorporated into the foundation systems and a SSDS.

On-Site Guests/Patrons:

*Inhalation of volatile COPC that migrate from soil vapor to indoor air of future on-Site buildings*

VOCs were detected in soil vapor samples, and all detected VOCs were considered COPC in soil vapor. The planned redevelopment of the Site is for commercial use and parking space. Therefore, inhalation exposure by on- Site guests to VOCs in soil vapor that migrates to indoor air is possible without a vapor barrier incorporated into the foundation systems and a SSDS to create a negative vacuum and draw vapors back onto the Site.

Off-Site Commercial Occupants: As noted above, the RI results reveal that there are soil vapor exceedances on the property boundary at the off-Site commercial occupants to the east. The Site owners of these properties should perform their own testing to confirm vapor conditions on these Site and mitigate their own property accordingly whether the remediation occurs on this Site or not.

Off-Site Resident:

*Inhalation of volatile COPC that migrate from soil vapor to indoor air of off-Site residences*

Off-Site residences are located directly west and across Marbledale Road to the east of the Site. Based on soil vapor concentrations listed on **Tables 4A** through **4C**, it is unlikely that a soil vapor plume has migrated off-Site in those directions. Therefore, inhalation exposure by off-Site residences to VOCs in soil vapor that migrates to indoor air of off-Site residential buildings is unlikely.

### 8.5.3 Future Scenario Remediation

The potential for exposure to COPC via the pathways and routes described in Section 8.3 will be mitigated in the event remediation occurs in conjunction with the planned project.

Construction/Utility Worker:

*Dermal contact with and incidental ingestion of COPC; inhalation of particulate COPC in surface soil/fill*

Site improvement and/or maintenance-related excavation or grading work could lead to contact with surface soil/fill. However, implementation of the HASP and CAMP will mitigate these worker impacts during the construction/maintenance period.

*Dermal contact with and incidental ingestion of COPC; inhalation of volatile and particulate COPC in subsurface soil/fill*

Same as above. In addition, implementation of a long term Site Management Plan, including a Soil Management Plan, will mitigate impacts to workers performing future subsurface work on the Site by requiring compliance with the health and safety protocols that will protect workers from exposure.

Site Worker:

*Inhalation of volatile COPC that migrate from soil vapor to indoor air of future on-Site buildings*

VOCs were detected in soil vapor samples, and all detected VOCs were considered COPC in soil vapor. The planned installation of a vapor barrier in the foundation cover system and SSDS will mitigate this impact.

On-Site Guests/Patrons:

*Inhalation of volatile COPC that migrate from soil vapor to indoor air of future on-Site buildings*

VOCs were detected in soil vapor samples, and all detected VOCs were considered COPC in soil vapor. The planned installation of a vapor barrier in the foundation cover system and SSDS will mitigate this impact.

Off-Site Commercial Occupants: After the future remediation and redevelopment of the Site, which will include the Site-wide cap and active vapor mitigation SSDS, the active on-Site vapor mitigation systems will ventilate/remove any contaminated soil vapor from underneath the buildings to prevent the indoor air quality from being affected by the contamination in soil vapor beneath the structure. In addition, off-Site occupants will be better protected from any potential exposures by drawing the vapors back onto the Site through the active, negative pressure SSDS. There can no longer be exposure from dust to the extent any could leave the Site from contaminated surface soils.

Off-Site Residents:

*Inhalation of volatile COPC that migrate from soil vapor to indoor air of off-Site residences*

Off-Site residences are located directly west and across Marbledale Road to the east of the Site. While the RI has concluded it is unlikely that a soil vapor plume has migrated off-Site in those directions, since dust migration can occur and parties are trespassing on

the Site, it is far preferable for all off-Site parties if the remediation occurs in conjunction with the Project since the contaminated surface soils will be covered and managed for the long term by all future owners and operators.

## 8.6 Uncertainty Analysis

Uncertainty is inherent in the process of conducting a HHE. In qualitative evaluations, information and assumptions regarding the likelihood, frequency, and magnitude of exposure, and information on the toxicity of the detected chemicals at a Site are used to infer the potential for exposure and health risk. By design, the evaluations rely on simple and conservative assumptions with the sole intent of identifying and eliminating from concern those scenarios that are unlikely to result in exposure and health risk and highlighting those scenarios that, depending on actual circumstances, could possibly result in exposure and health risk. Uncertainty is associated with each component of this process, including environmental sampling and analysis, chemical fate and transport analysis, exposure assessment, and the toxicological information used to characterize potential human health risks. Uncertainty in any of these components could alter the conclusions regarding the likelihood of exposure and health risk for a given receptor population.

## 8.7 Summary and Discussion

This qualitative HHE provides an indication as to the potential for exposure and adverse human health effects associated with chemicals detected in sampled environmental media at the Site. The evaluation is based on the most relevant potential exposure pathways, the most likely human receptors, and current land use as well as the proposed redevelopment of the Site in the absence of remedial action. **Table 12** provides a summary of the HHE findings.

Based on the comparison of the maximum detected concentration to chemical- and medium-specific screening values, a number of VOCs, SVOCs, cyanide, PCBs and metals were identified in surface and subsurface soil/fill. In addition, all VOCs detected in subsurface vapor samples collected at the Site were identified as COPC. Groundwater was not included as an environmental medium of concern in this HHE, because human exposure to chemicals in Site groundwater is unlikely.

Trespassers and off-Site residents (adults and children) were identified as potential human receptors for the current/future land use scenario, based on the current Site conditions and land uses in the vicinity of the Site. The potential for trespasser exposure to COPC in surface soil/fill on the Site are possible. In addition, the potential for exposure of off-Site residents to volatile COPC in soil vapor that migrates to indoor air of off-Site residential buildings is unlikely however, the potential exposure to off-Site commercial

occupants to the east is possible either from the former landfill activities that may have occurred under these Sites or vapors associated with prior brownfield uses on these sites.

Based on the proposed redevelopment of the Site for commercial use, construction/utility workers, Site workers, and on-Site guests/patrons and off-Site residents (adults and children) were identified as potential human receptors for the future land use scenario. However, the remediation, in conjunction with the planned redevelopment of the Site will mitigate these potential exposures. The majority of the Site will be covered by a concrete slab, concrete sidewalks, or asphalt driveways and parking lots, therefore the dermal exposure pathway will be eliminated. Landscaped areas are planned at this time and will serve as a vegetative cap in accordance with BCP requirements. As such, it is not expected that Site workers or on-Site guests/patrons would directly contact COPC in surface. A Site Management Plan will be required to manage residual contaminated subsurface soil/fill to protect future Site workers and on-Site occupants.

The potential for Site workers and on-Site guests/patrons for exposure to volatile COPC in soil vapor that migrates to indoor air of future buildings on the Site is possible, but shall be mitigated by the planned installation of a vapor barrier and cover system and active SSDS. Installation of these controls should mitigate potential off-Site exposure to off-Site commercial occupants to the east. However, the potential for exposure of off-Site residents to the west to volatile COPC in soil vapor that migrates to indoor air of off-Site residential buildings is unlikely.

# 9. Conclusions and Recommendations

## 9.1 Conclusions

The Remedial Investigation of the Former Marble Quarry Landfill Site provided an environmental characterization of on-Site soil vapor, surface and subsurface soil/fill and groundwater sufficient to evaluate potential impacts to human health and the environment. A summary of the conclusions drawn from the data presented in this report is provided below by medium evaluated.

### 9.1.1 Soil Vapor

As indicated on **Tables 4A** through **4C**, widespread and numerous soil vapor detections were observed at all eighteen (18) soil vapor sampling points. The maximum VOC concentrations detected from the 18 soil vapor samples collected across the Site included dichlorodifluoromethane as high as 173,000 $ug/m^3$ (micrograms per cubic meter) in VP-15, 1,2-dichlorotetrafluoroethene as high as 344,000 $ug/m^3$ in VP-15, and trichlorofluoromethane as high as 198,000 $ug/m^3$ in VP-16. While the NYSDOH does not

currently have specific soil vapor standards to compare the pervasive soil vapor detection to on an open air Site, the RI has confirmed that widespread soil vapor detections of various contaminants are present beneath the Site.

To be precautionary, the human health evaluation (HHE) indicated that in the absence of Site capping, installation of a vapor barrier under each planned structure, and the installation and operation of a SSDS (i.e. a negative air pressure system that ventilates contaminated air from beneath a structure) which may prevent off-site migration of soil vapor, there is potential risk to current adjacent commercial occupants.

The historic widespread waste disposal at the Site, which created a widespread soil vapor issue, will be managed by the planned remediation and development of the Site, and a Site management Plan, which will run with the land and will be required to be implemented by all future owners via an environmental easement. This planned remediation in conjunction with the proposed development will eliminate this risk to adjacent Site occupants and the potential risk to on-Site occupants in future buildings if the development occurred without remediation.

#### 9.1.2 Surface Soil/Fill

Evaluation of analytical results for surface soil/fill samples did not identify many VOCs across the Site. Only acetone exceeded UUSCOs at surface soil sampling location SS-3. Thus, VOCs in the shallow soil (top 0.17 ft) do not appear to be an issue to future Site development. However, the evaluation of analytical results for SVOCs in the surface soil/fill indicate that multiple exceedances of the UUSCOs were detected. Various SVOC exceedances were noted at shallow soil sampling locations SS-2, SS-6, SS-7 and SS-8, with the most common SVOC exceedance being benzo(b)fluoranthene. As noted on **Tables 6A** and **6B**, no exceedances for PCBs were detected in the ten (10) surface soil sampling locations.

In addition, metals were detected in excess of UUSCOs, including copper, iron, lead, mercury and zinc, with the two most toxic metals detected being mercury and lead. Lead in excess of UUSCOs was detected at shallow soil sampling locations SS-2, SS-3, SS-6 and SS-8. Mercury was detected in excess of UUSCOs at sampling locations SS-2 and SS-3.

Trespassers who currently access the Site could be exposed to these contaminated SVOCs and metals in surface soils. Dust migration could also occur. Site capping through the planned remediation in conjunction with the proposed development will eliminate the exposure pathway to these contaminated surface soils through a Site-wide composite concrete, asphalt and clean soil cover system that will prevent direct exposure and through a long term Site Management Plan (SMP) and Environmental Easement

(EE). Future Site occupants and workers will also be protected by this long term cover system and the management of the Site soils through a SMP and EE.

### 9.1.3 Subsurface Soil/Fill

The soil laboratory analytical results for VOCs in the subsurface soil indicate that acetone, toluene, total xylenes and ethylbenzene exceeded the UUSCOs at sampling locations TB-1, TB-3, TB-4, TB-6, TB-9, TB-10 and TB-12. The other VOCs detected above UUSCOs were scattered across the Site at single sampling locations. The results of VOC analysis indicate that, with the exception of acetone, these compounds are not a Site-wide pervasive problem, but rather are isolated in a few areas across the Site from historic petroleum use and contamination on the Site.

The laboratory analytical results for SVOCs in the subsurface soil indicate multiple compounds exceeded their respective UUSCOs at test boring locations TB-3, TB-5, TB-6, TB-9, TB-10, TB-11 and TB-12. The majority of these sampling locations had detections of multiple SVOCs (five to seven) in excess of the UUSCOs. Thus, SVOCs are persistent and pervasive in the fill material across the Site and will be consistently dealt with during the proposed redevelopment of the Site. These compounds are found in the fill material at varying depths from shallow (6-8 ftbg) to deep (>32 ftbg). Thus, excavated soil during the proposed development will need to be dealt with in accordance with all applicable NYSDEC Soil Regulations pertaining to SVOCs.

As summarized on **Table 5**, low levels of PCBs were detected in two samples of surface soil at concentrations that were less than the UUSCO of 100 ug/kg. PCBs were detected at sampling locations subsurface soils at borings TB-4 (24-26 ftbg); TB-7 (10-12 ftbg); and, TB-10 (at 4-6 and 32-34 ftbg) where the UUSCO was exceeded. However, the depth of these PCB exceedances does not pose an exposure risk. In addition, PCBs were not detected in groundwater.

Metals in excess of the UUSCOs, including arsenic, barium, cadmium, chromium, copper, lead and mercury, were detected at numerous subsurface soil sampling locations across the Site. Soil sampling locations TB-1 through TB-4, TB-6, TB-7, and TB-9 through TB-13 all contained various metals above the UUSCOs, including heavy metals such as barium, cadmium, chromium, lead, and mercury. The results of subsurface soil sampling for metals indicate that metals are pervasive and common throughout the fill material at varying depths.

Thus, any excavated soil removed from the Site during the proposed development will need to be properly disposed of as contaminated fill in accordance with all applicable NYSDEC Soil Regulations. Exposure to subsurface soils will be controlled through the

proposed remedial cap and the planned SSDS systems, as well as the long term SMP and EE.

#### 9.1.4 Groundwater

The results of the RI groundwater sampling program from nine (9) permanent on-Site wells indicated the following:

The results of the RI field investigation indicate that the former marble quarry is filled with a variety of material including cinders and ash, construction and demolition debris, various metal parts, refuse including rubber and foam, mattress parts, etc. The dumped material is extremely variable in thickness within the former quarry limits and ranges from 85 ft thick on the south central portion of the Site at test boring TB-6, to approximately 16 ft thick at test boring TB-9. Shallow bedrock ranging in depth from 8 to 21 ftbg was encountered outside of the quarry limits, and groundwater was not encountered in fill areas outside of the quarry proper.

- Groundwater flows regionally to the south/southeast in the overlying fill material and in the fractured marble bedrock. Groundwater monitoring on multiple dates indicates that there appears to be two separate groundwater flow regimes - one in the fill material and one in the fractured bedrock. However, based on Site topography, groundwater flows to the southeast and south, however, collected groundwater levels from the nine (9) wells could not be contoured due to extreme variability across the Site. Depth to groundwater during the monitoring events ranged from 17 to 35 ftbg. Due to the deep groundwater depths, groundwater will not be encountered during the proposed remedial and redevelopment excavation or foundation installation. Dewatering and/or groundwater pumping and disposal are not anticipated. Groundwater is also not used as a potable source of drinking water in this area. Therefore, the HHE concluded that direct exposure to groundwater is not a risk to any on- or off-Site human receptors. Soil vapor emanating from contaminated groundwater will be addressed through the soil vapor controls discussed above.

- VOCs were detected in five of the nine monitor wells at concentrations that, for the most part, slightly exceeded AWQS. Five (5) VOCs (benzene, dichlorodifluoromethane, isopropylbenzene, TCE, and trichlorofluoromethane) were detected in the groundwater samples at concentrations that exceeded the NYSDEC AWQS of 5 µg/L for all VOCs detected except benzene, which has a standard of 0.7 µg/L during the May 21 and 22, 2015 RI sampling event. However, these VOCs in groundwater will not pose a risk to future Site occupants as all of the subsurface structures (including stormwater drainage, footings and

foundations) will be installed above the water table and the Site-wide cap and SSDSs will mitigation any soil vapor emanating from the groundwater. Similarly, SVOCs and pesticides, which were detected in groundwater across the Site intermittently, do not pose a risk of exposure to current or future receptors because there is no possibility of direct exposure and these substances are not volatile.

## 9.2 Recommendations

The recommendations described below are based on the results of the RI, which mandate the implementation of remedial actions when contaminants above the SCOs and other standards are discovered. The RI results confirm that remedial efforts are required at the Former Marble Quarry Landfill Site to be protective of public health and the environment and the proposed commercial development can serve as part of the remedy by serving as the remedial cover system required to prevent certain current exposure pathways from continuing.

Remedial recommendations include:

- Soil Removal - The applicant has not finalized redevelopment plans but the anticipated construction is expected to require the excavation and disposal of a significant volume of surface soils resulting in subsurface stormwater drainage structures, utility trenches, regrading and foundation structures (i.e.: footings and slabs) are proposed. The areas where it is likely that soil removal and disposal will be required are shown on **Figure 9**, a proposed future development map overlain on soil and surface soil sampling locations. The remedial action will remove some of the contaminated fill material causing adverse impacts to surface soil, subsurface soil, groundwater, and soil vapor.

- Placement and long term maintenance of a Site-wide cover system, including but not limited to a vapor barrier under proposed occupied structures, through documented clean soil, asphalt, and concrete materials over the surface of the Site to minimize the potential for exposure to impacted remaining soil/fill, groundwater, and soil vapor.

- Installation of an active SSDS inside on-Site building structures will ventilate/remove the contaminated air underneath the structures to prevent the indoor air quality from being affected by the contaminated soil vapor beneath the buildings.

- Establishment of health and safety protocols for specific excavation and redevelopment activities to minimize exposure to potential contaminants during construction.

- Development of an excavation management plan (EMP) for dealing with excavated fill/soil material (as well as for the unlikely event that groundwater is encountered) during development activities and when excavating as required to develop the Site and to maintain the Site over the long term following completion of Site redevelopment. The EMP should include health and safety requirements and excavated soil and/or groundwater handling/disposal requirements.

As discussed in the qualitative human health evaluation (HHE) in Section 8.0, implementation of these actions will be protective of human health and the environment.

# FIGURES

# FIGURE 1
# SITE LOCATION MAP

## 109-125 MARBLEDALE ROAD
## TUCKAHOE, NEW YORK

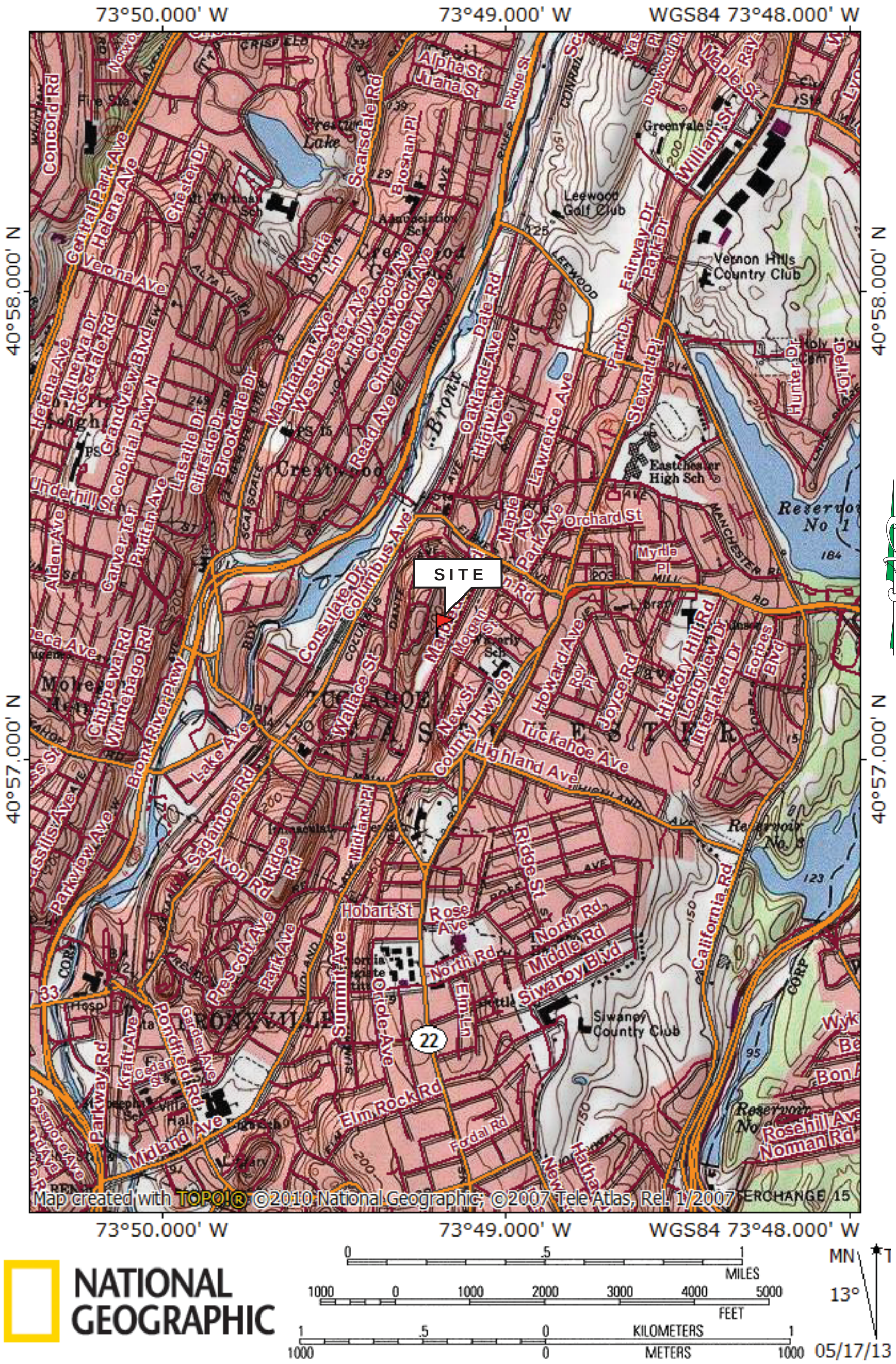


NATIONAL GEOGRAPHIC

FIGURE 2

| | | | | |
|---|---|---|---|---|
| 109-125 MARBLEDALE ROAD<br>TUCKAHOE, NEW YORK | AERIAL PHOTOGRAPH SHOWING THE SITE AND SURROUNDING AREA | NOT TO SCALE | JULY 2015 | HydroEnvironmental SOLUTIONS, INC.<br>One Deans Bridge Road<br>Somers, New York 10589 |
| | | REMEDIAL INVESTIGATION | | |

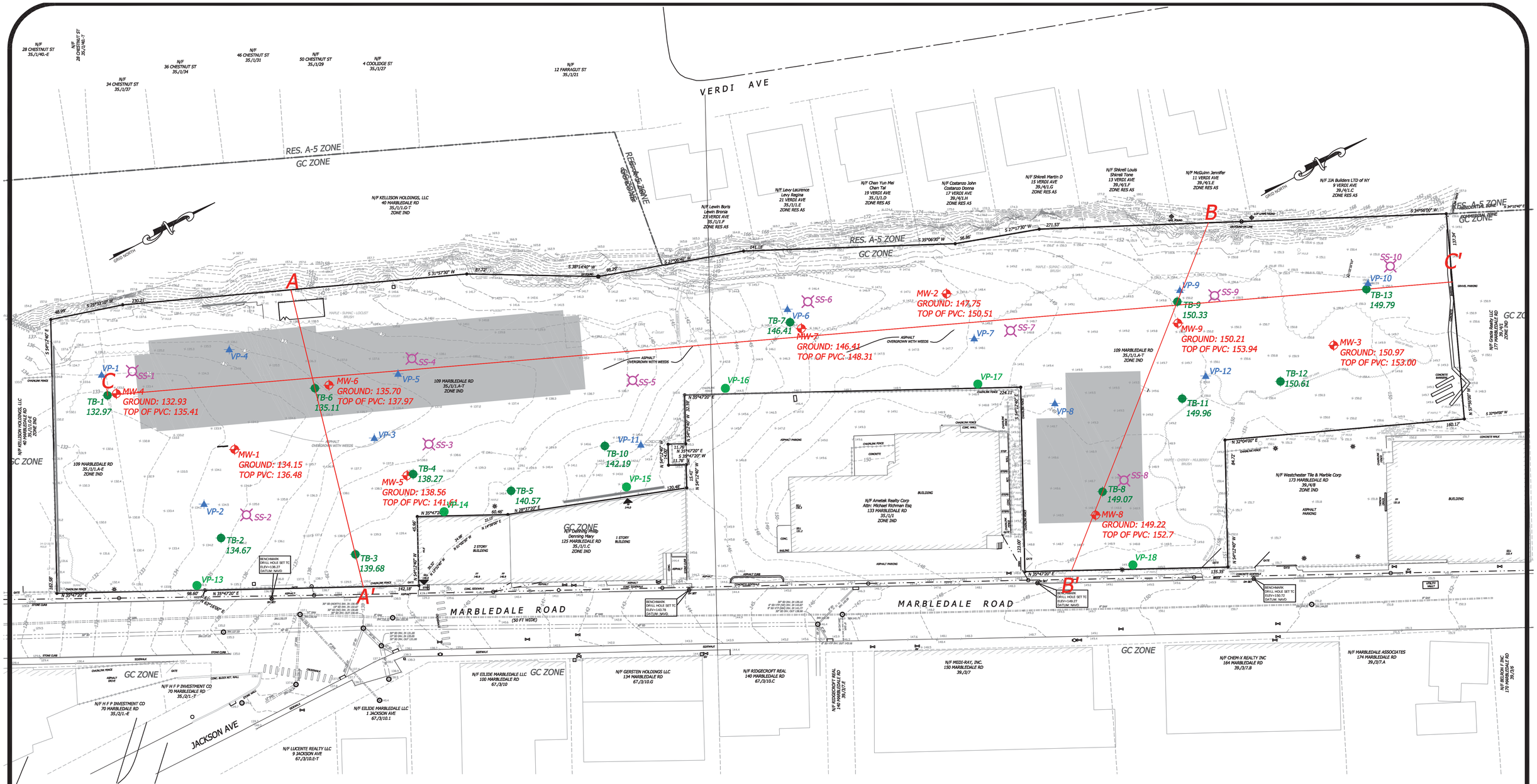


SITE PLAN

SCALE: 1" = 30'

FIGURE ADAPTED FROM SURVEY BY MR. MICHAEL W. FINKBEINER

| | | | |
|---|---|---|---|
| 109-125 MARBLEDALE ROAD<br>TUCKAHOE, NEW YORK | SITE PLAN | FIGURE 3 | HydroEnvironmenta SOLUTIONS, INC<br>One Deans Bridge Road<br>Somers, New York 10589 |

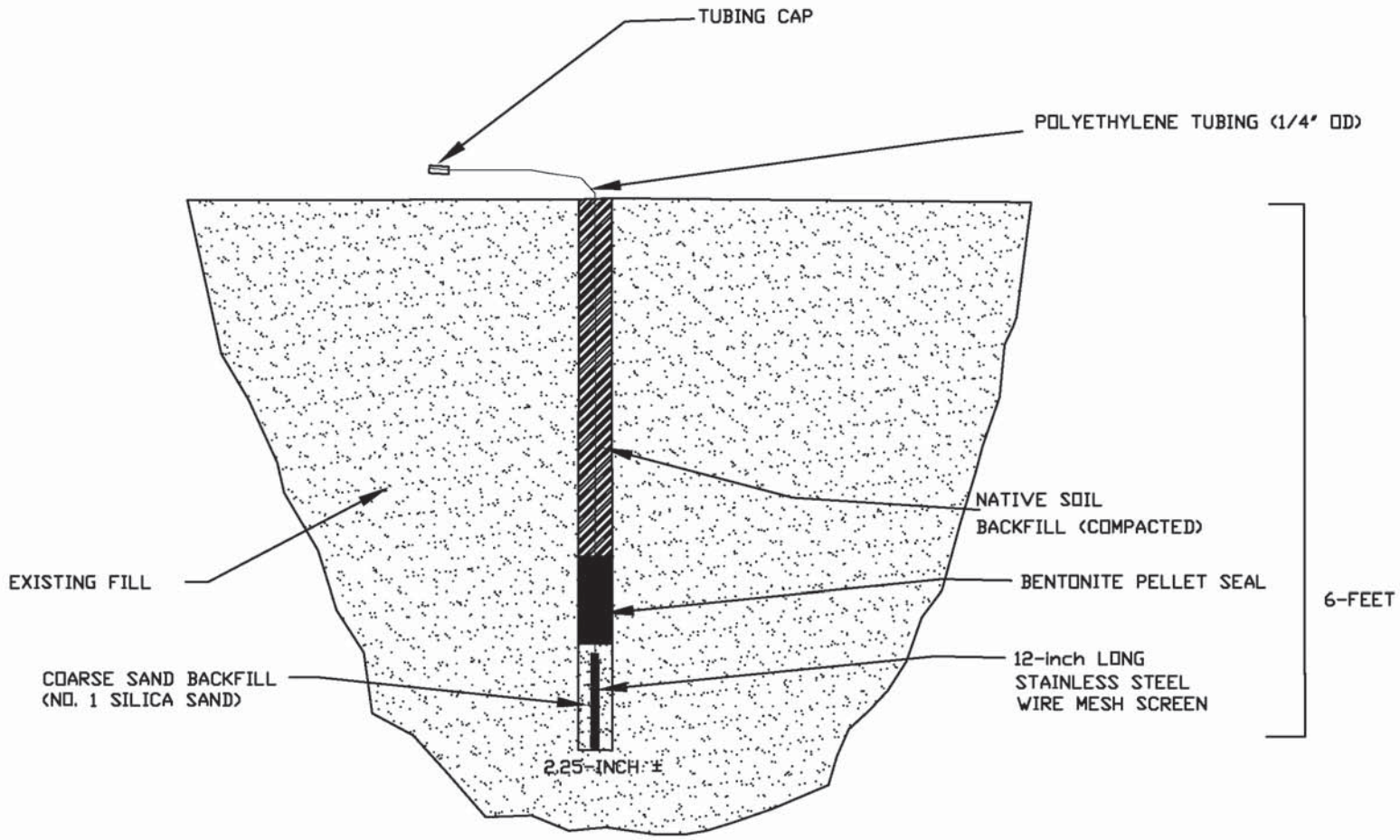


FIGURE NO. 4

HydroEnvironmental
SOLUTIONS, INC.
One Deans Bridge Road Somers, New York 10589
(914) 276 - 2560 Fax: (914) 276 - 2664

SCALE IN FEET

NOT TO SCALE

| | |
|---|---|
| DATE: 6/14/15 | DRAWN BY: NBK |
| JOB NO: 127-09.4 | REVIEWED BY: TFC |

SOIL VAPOR POINT DETAIL
REMEDIAL INVESTIGATION
109 MARBLEDALE ROAD
TUCKAHOE, NEW YORK

CAD FILE No. F:\BROWNFIELDS\109 MARBELEDALE RD\RMEDIAL INVESTIGATION.dwg

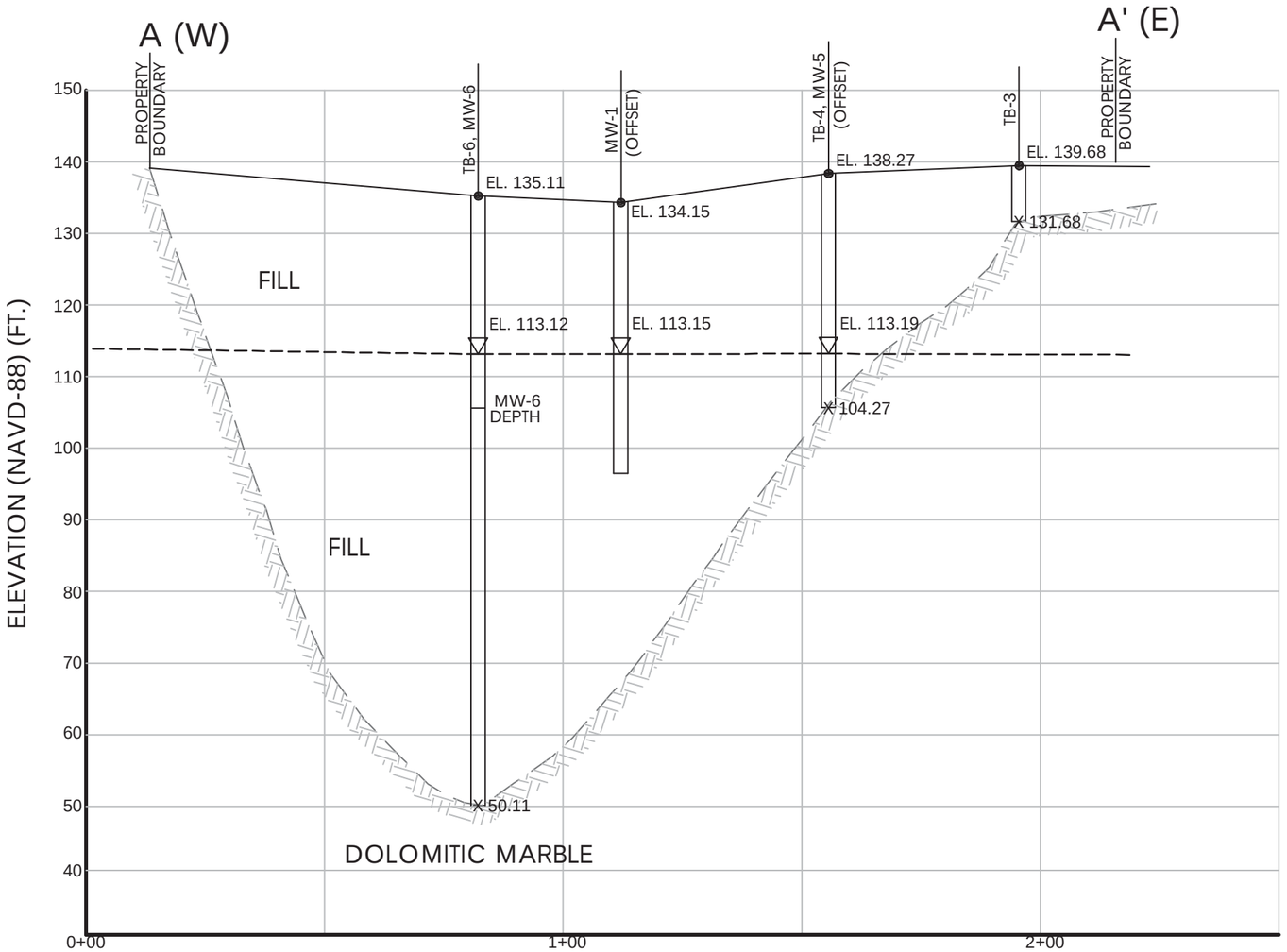


## PROFILE: SECTION A-A'

SCALE: VERT.: 1" = 20'
HORIZ.: 1" = 30'

### LEGEND

- GROUND ELEVATION
- GROUND SURFACE
- BEDROCK ELEVATION
- BEDROCK SURFACE (ESTIMATED)
- GROUNDWATER ELEVATION (5/11/15)
- WATER TABLE (ESTIMATED)

*NOTES:*

*1. DATA CONCERNING SITE STRATIGRAPHY AND GROUNDWATE ELEVATION HAVE BEEN INTERPRETED AT BORING AND WELL LOCATIONS ONLY. THE STRATIGRAPHY BETWEEN BORINGS MAY VARY FROM THAT SHOWN.*

*2. REFER TO PLAN VIEW FOR SUBSURFACE PROFILE LOCATION. SEE ACCOMPANYING GEOLOGIC LOGS FOR STRATA DETAILS AND MONITOR WELL SPECIFICATIONS.*

*3. BORINGS INCLUDED ON TRANSECTS ARE OFFSET WHERE NOTED. SEE FIGURE 3 FOR OFFSET DISTANCE AND DIRECTION.*

*4. FIGURES ADAPTED FROM BASE MAP PROVIDED BY MR. MICHAEL W. FINKBEINER (FIGURE 3). ELEVATIONS ARE RELATIVE TO NORTH AMERICAN VERTICAL DATUM - 1988 (NAVD-88) IN FEET.*

| | | | |
|---|---|---|---|
| **109-125 MARBLEDALE ROAD TUCKAHOE, NEW YORK** | **SECTION A-A'** | **FIGURE 5** | HydroEnvironmental SOLUTIONS, INC. One Deans Bridge Road Somers, New York 10589 |

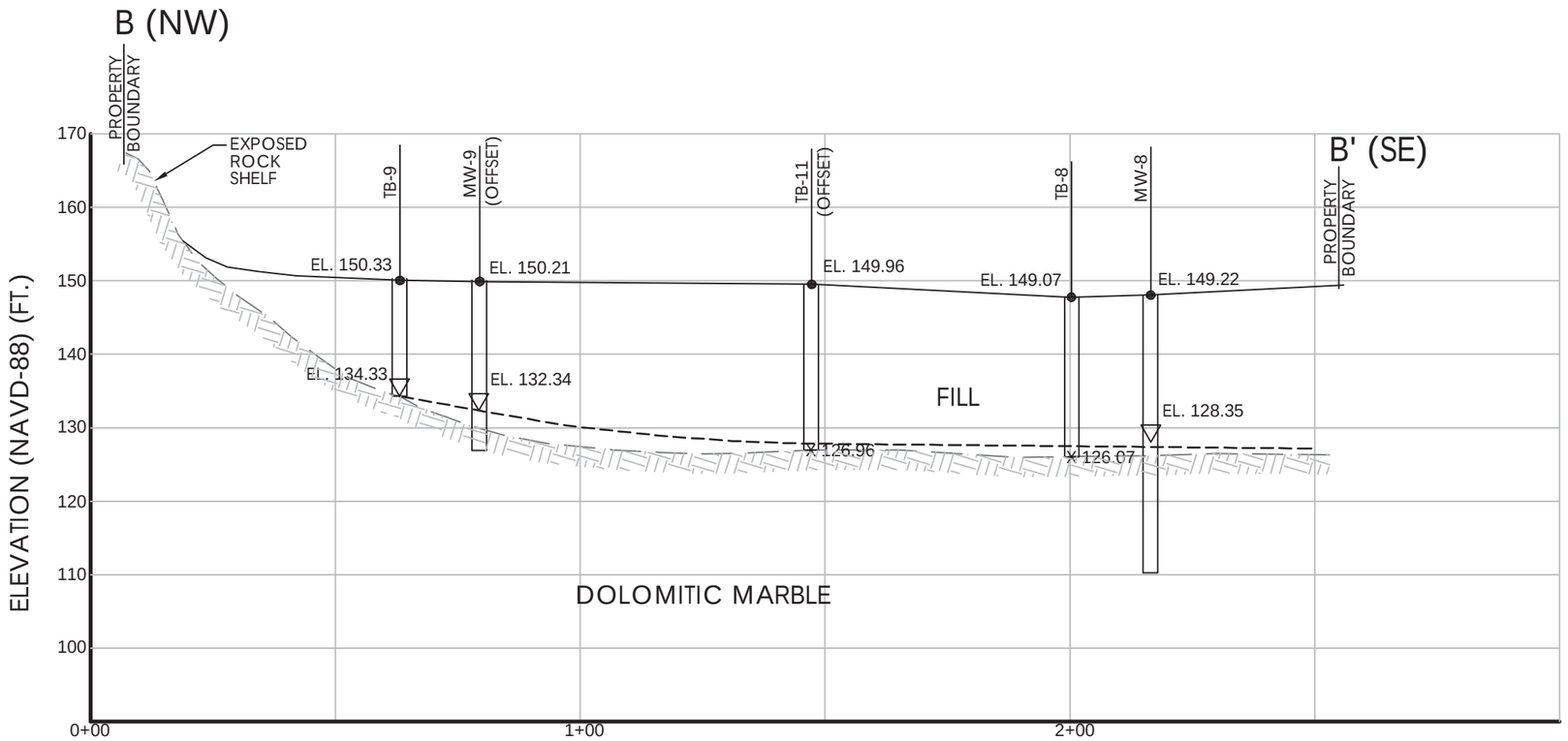


## PROFILE: SECTION B-B'

SCALE: VERT.: 1" = 20'
HORIZ.: 1" = 30'

### LEGEND

- ● GROUND ELEVATION
- GROUND SURFACE
- X BEDROCK ELEVATION
- BEDROCK SURFACE (ESTIMATED)
- ▽ GROUNDWATER ELEVATION (5/11/15)
- WATER TABLE (ESTIMATED)

*NOTES:*

*1. DATA CONCERNING SITE STRATIGRAPHY AND GROUNDWATER ELEVATION HAVE BEEN INTERPRETED AT BORING AND WELL LOCATIONS ONLY. THE STRATIGRAPHY BETWEEN BORINGS MAY VARY FROM THAT SHOWN.*

*2. REFER TO PLAN VIEW FOR SUBSURFACE PROFILE LOCATION. SEE ACCOMPANYING GEOLOGIC LOGS FOR STRATA DETAILS AND MONITOR WELL SPECIFICATIONS.*

*3. BORINGS INCLUDED ON TRANSECTS ARE OFFSET WHERE NOTED. SEE FIGURE 3 FOR OFFSET DISTANCE AND DIRECTION.*

*4. FIGURES ADAPTED FROM BASE MAP PROVIDED BY MR. MICHAEL W. FINKBEINER (FIGURE 3). ELEVATIONS ARE RELATIVE TO NORTH AMERICAN VERTICAL DATUM - 1988 (NAVD-88) IN FEET.*

| | | | |
|---|---|---|---|
| **109-125 MARBLEDALE ROAD TUCKAHOE, NEW YORK** | **SECTION B-B'** | **FIGURE 6** | HydroEnvironmental SOLUTIONS, INC. One Deans Bridge Road Somers, New York 10589 |

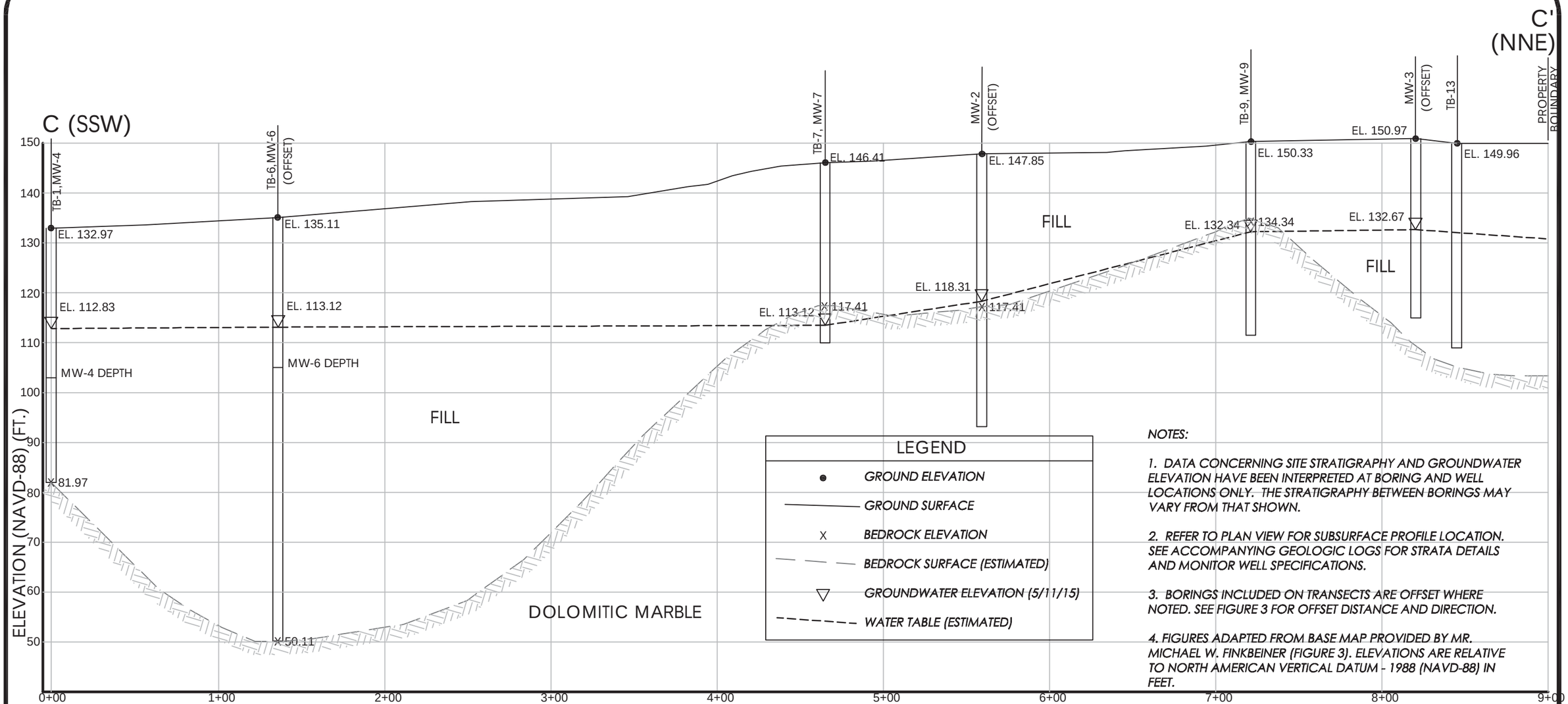


*NOTES:*

*1. DATA CONCERNING SITE STRATIGRAPHY AND GROUNDWATER ELEVATION HAVE BEEN INTERPRETED AT BORING AND WELL LOCATIONS ONLY. THE STRATIGRAPHY BETWEEN BORINGS MAY VARY FROM THAT SHOWN.*

*2. REFER TO PLAN VIEW FOR SUBSURFACE PROFILE LOCATION. SEE ACCOMPANYING GEOLOGIC LOGS FOR STRATA DETAILS AND MONITOR WELL SPECIFICATIONS.*

*3. BORINGS INCLUDED ON TRANSECTS ARE OFFSET WHERE NOTED. SEE FIGURE 3 FOR OFFSET DISTANCE AND DIRECTION.*

*4. FIGURES ADAPTED FROM BASE MAP PROVIDED BY MR. MICHAEL W. FINKBEINER (FIGURE 3). ELEVATIONS ARE RELATIVE TO NORTH AMERICAN VERTICAL DATUM - 1988 (NAVD-88) IN FEET.*

## PROFILE: SECTION C-C'

SCALE: VERT.: 1" = 20'
HORIZ.: 1" = 60'

| | | | |
|---|---|---|---|
| **109-125 MARBLEDALE ROAD TUCKAHOE, NEW YORK** | **SECTION C-C'** | **FIGURE 7** | HydroEnvironmental SOLUTIONS, INC. One Deans Bridge Road Somers, New York 10589 |

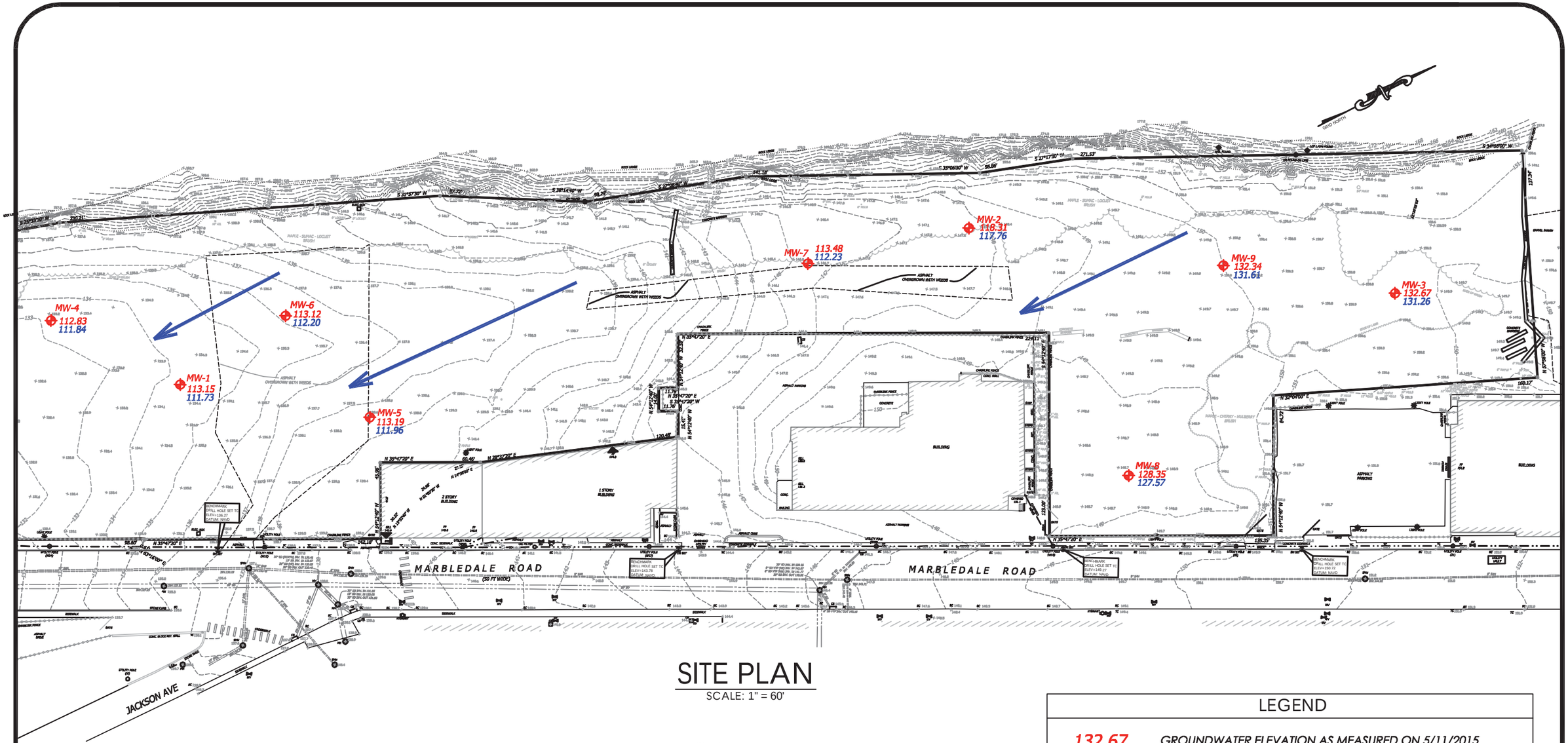


# SITE PLAN

SCALE: 1" = 60'

NOTES:

1. BASE MAP IS ADAPTED FROM FIGURE PROVIDED BY M MICHAEL W. FINKBEINER (FIGURE 3). ELEVATIONS ARE RELATIVE TO NORTH AMERICAN VERTICAL DATUM - 1988 (NAVD-88) IN FEET.

| LEGEND | |
|---|---|
| 132.67 | GROUNDWATER ELEVATION AS MEASURED ON 5/11/2015 |
| 131.26 | GROUNDWATER ELEVATION AS MEASURED ON 5/21/2015 |
| ← | GENERAL PRESUMED GROUNDWATER FLOW DIRECTION (N TO S) |

| | | | |
|---|---|---|---|
| **109-125 MARBLEDALE ROAD TUCKAHOE, NEW YORK** | **GROUNDWATER ELEVATIONS & GENERAL FLOW DIRECTIONS** | **FIGURE 8** | HydroEnvironmental SOLUTIONS, INC. One Deans Bridge Road Somers, New York 10589 |

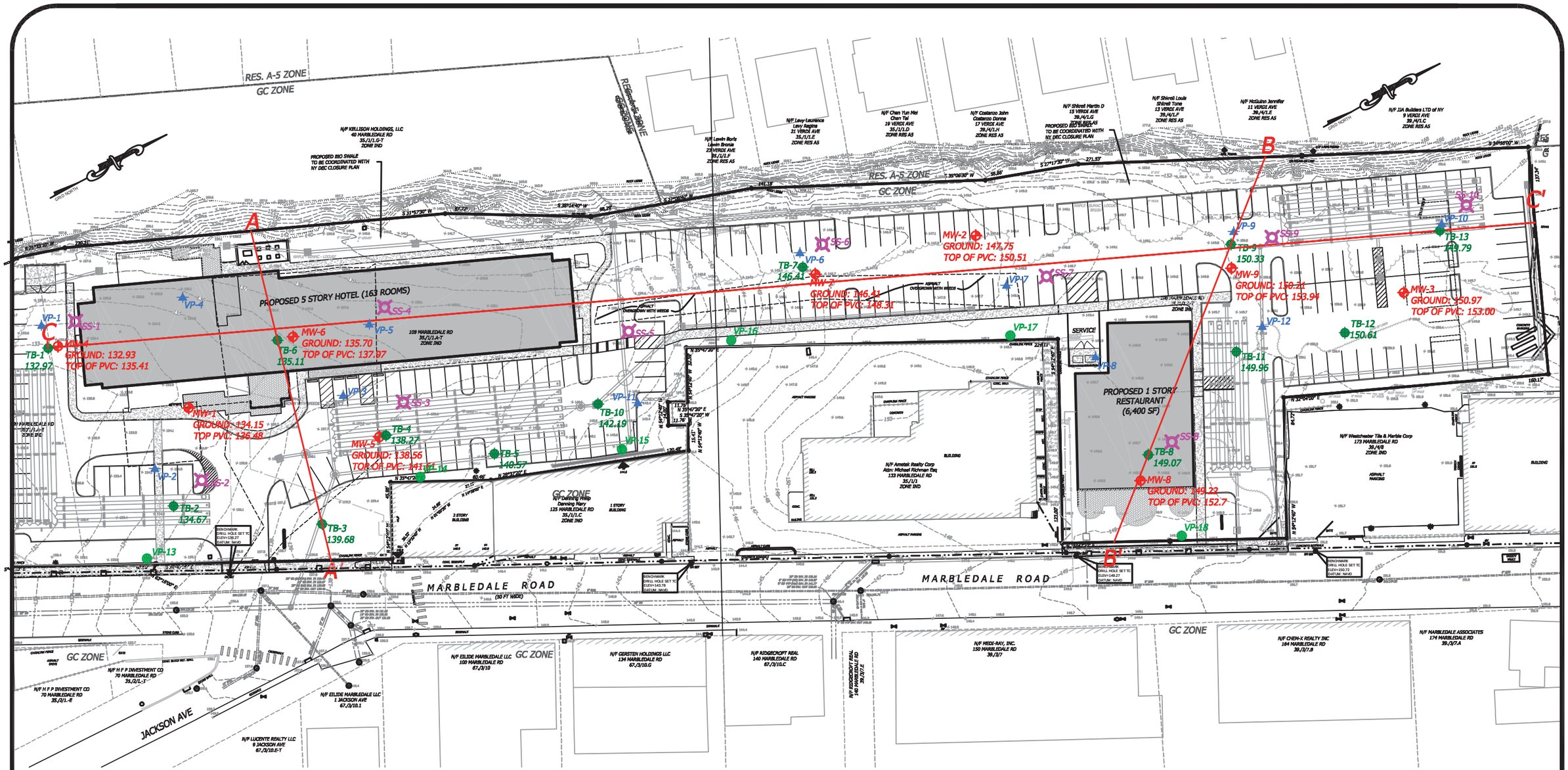


SITE PLAN

SCALE: 1" = 60'

| | | | |
|---|---|---|---|
| **109-125 MARBLEDALE ROAD TUCKAHOE, NEW YORK** | **Proposed Development** | **FIGURE 9** | HydroEnvironmental SOLUTIONS, INC. One Deans Bridge Road Somers, New York 10589 |

**Figure 10**
**Conceptual Site Model**

**Remedial Investigation**
**109-125 Marbledale Road**
**Tuckahoe, New York**
**Brownfield Cleanup Program #C360143**

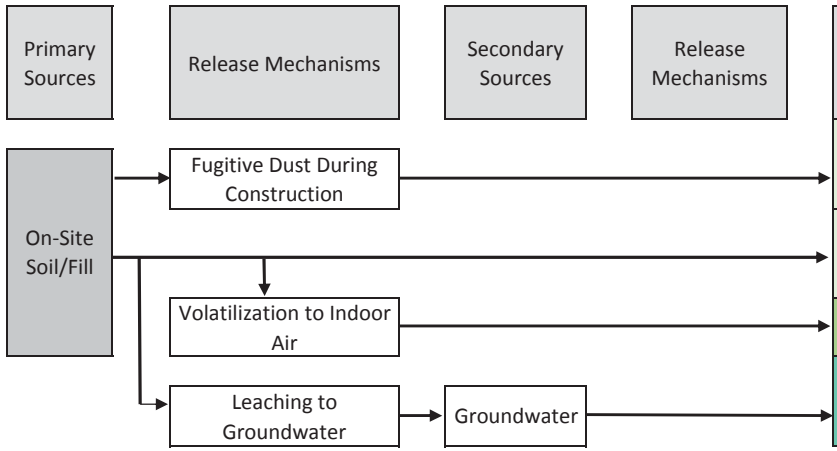


| Exposure Media | Exposure Routes | Current: Trespasser | Current: Off-Site Resident | Future: Construction & Utility Worker | Future: Site Worker | Future: On-Site Guests and off-Site Residents |
|---|---|---|---|---|---|---|
| Surface Soil/Fill | Ingestion | x | | x | | |
| | Dermal Contact | x | | x | | |
| | Inhalation | x | | x | | |
| Subsurface Soil/Fill | Ingestion | | | x | | |
| | Dermal Contact | | | x | | |
| | Inhalation | | | x | | |
| Indoor Air | Inhalation | | | | x | x |
| Groundwater | Ingestion | | | | | |
| | Dermal Contact | | | | | |
| | Inhalation | | | | | |

| LEGEND | |
|---|---|
| → | = Chemical migration pathway |
| x | = Potentially complete exposure pathway |

# TABLES

# TABLE 1

## REMEDIAL INVESTIGATION
## 109-125 MARBLEDALE ROAD
## TUCKAHOE, NEW YORK
## BCP #C360143

## Summary of PID Field Screening Results
## Surface Soil Samples
## April 23, 2015

| Sample No. | Depth | PID Reading | Notes |
|---|---|---|---|
| SS-1 | 0-2" | ND | Topsoil; brown; dry; no hydrocarbon odor |
| SS-2 | 0-2" | 0.1 | Topsoil; brown; dry; no hydrocarbon odor |
| SS-3 | 0-2" | ND | Topsoil; brown; dry; no hydrocarbon odor |
| SS-4 | 0-2" | ND | Topsoil; brown; dry; no hydrocarbon odor |
| SS-5 | 0-2" | ND | Topsoil; brown; dry; no hydrocarbon odor |
| SS-6 | 0-2" | 0.1 | Topsoil; brown; dry; no hydrocarbon odor |
| SS-7 | 0-2" | ND | Topsoil; brown; dry; no hydrocarbon odor |
| SS-8 | 0-2" | 0.2 | Topsoil; brown; dry; no hydrocarbon odor |
| SS-9 | 0-2" | ND | Topsoil; brown; dry; no hydrocarbon odor |
| SS-10 | 0-2" | ND | Topsoil; brown; dry; no hydrocarbon odor |

PID (photoionization detector) readings in parts per million, calibration gas equivalents
Depth in inches below grade

# TABLE 2
## Summary of Monitor Well Construction Detail

## Remedial Investigation
## 109-125 Marbledale Road
## Tuckahoe, New York
## BCP #C360143

| Well | Location Description | Date Installed | Total Depth (ftbg) | Elevation (Ground Surface) | Elevation (Top of PVC) | Screen Interval (ftbg) | Diameter | Bedrock (Y/N) |
|---|---|---|---|---|---|---|---|---|
| **2013 Phase II ESA Well Installation** | | | | | | | | |
| MW-1 | South | 11/14/2013 | 38.06 | 134.15 | 136.48 | 25-40 | 2" | N |
| MW-2 | West | 11/15/2013 | 54.74 | 147.85 | 150.51 | 27.5-52.5 | 2" | Y |
| MW-3 | North | 11/15/2013 | 33.6 | 150.97 | 153.00 | 20-35 | 2" | N |
| **2015 RI Well Installation** | | | | | | | | |
| MW-4 | Southwest | 4/16/2015 | 28.88 | 132.93 | 135.41 | 19.5-29.5 | 4" | N |
| MW-5 | Southeast | 3/10/2015 | 34.2 | 138.56 | 141.61 | 26-36 | 4" | N |
| MW-6 | Southwest | 4/16/2015 | 30.03 | 135.70 | 137.97 | 20-30 | 4" | N |
| MW-7 | West | 4/17/2015 | 35.4 | 146.74 | 148.31 | 25-35 | 4" | N |
| MW-8 | Northeast | 3/6/2015 | 36.55 | 149.22 | 152.70 | 26-36 | 4" | Y |
| MW-9 | North | 4/17/2015 | 23.45 | 150.21 | 153.94 | 15-25 | 4" | Y |

**TABLE 3A**
**GROUNDWATER LABORATORY ANALYTICAL RESULTS SUMMARY**

**REMEDIAL INVESTIGATION**
**109-125 MARBLEDALE ROAD**
**TUCKAHOE, NEW YORK**
**BCP #C360143**

| Analyte | Lab Sample Id / Collection Date / Client Id / Matrix | | | BJ21609 | | | | BJ21610 | | | | BJ21611 | | | | BJ20803 | | | | BJ20804 | | | | BJ20805 | | | |
|---|---|---|---|---|---|---|---|---|---|---|---|---|---|---|---|---|---|---|---|---|---|---|---|---|---|---|---|
| | | | | 5/22/2015 | | | | 5/22/2015 | | | | 5/22/2015 | | | | 5/21/2015 | | | | 5/21/2015 | | | | 5/21/2015 | | | |
| | | | | MW-1 | | | | MW-2 | | | | MW-3 | | | | MW-104 | | | | MW-4 | | | | MW-5 | | | |
| | | | | Ground Water | | | | Ground Water | | | | Ground Water | | | | Ground Water | | | | Ground Water | | | | Ground Water | | | |
| | CAS | TAGM-GW | TOGS-WQ/GA | Result | RL | Qual | MDL | Result | RL | Qual | MDL | Result | RL | Qual | MDL | Result | RL | Qual | MDL | Result | RL | Qual | MDL | Result | RL | Qual | MDL |
| **Volatiles By SW8260C (ug/L)** | | | | | | | | | | | | | | | | | | | | | | | | | | | |
| 1,1,1-Trichloroethane | 71-55-6 | 5 | 5 | < 4.0 | 4.0 | U | 0.50 | < 2.0 | 2.0 | U | 0.25 | < 4.0 | 4.0 | U | 0.50 | < 2.0 | 2.0 | U | 0.25 | < 4.0 | 4.0 | U | 0.50 | < 4.0 | 4.0 | U | 0.50 |
| 1,1,2,2-Tetrachloroethane | 79-34-5 | 5 | 5 | < 2.0 | 2.0 | U | 0.50 | < 1.0 | 1.0 | U | 0.25 | < 2.0 | 2.0 | U | 0.50 | < 1.0 | 1.0 | U | 0.25 | < 2.0 | 2.0 | U | 0.50 | < 2.0 | 2.0 | U | 0.50 |
| 1,1,2-Trichloroethane | 79-00-5 | | 1 | < 4.0 | 4.0 | U | 0.50 | < 2.0 | 2.0 | U | 0.25 | < 4.0 | 4.0 | U | 0.50 | < 1 | 1 | U | 0.25 | < 1 | 1 | U | 0.50 | < 1 | 1 | U | 0.50 |
| 1,1-Dichloroethane | 75-34-3 | 5 | 5 | < 4.0 | 4.0 | U | 0.50 | < 2.0 | 2.0 | U | 0.25 | < 4.0 | 4.0 | U | 0.50 | < 2.0 | 2.0 | U | 0.25 | < 4.0 | 4.0 | U | 0.50 | < 4.0 | 4.0 | U | 0.50 |
| 1,1-Dichloroethene | 75-35-4 | 5 | 5 | < 2.0 | 2.0 | U | 0.50 | < 1.0 | 1.0 | U | 0.25 | < 2.0 | 2.0 | U | 0.50 | < 1.0 | 1.0 | U | 0.25 | < 2.0 | 2.0 | U | 0.50 | < 2.0 | 2.0 | U | 0.50 |
| 1,2,3-Trichlorobenzene | 87-61-6 | | | < 2.0 | 2.0 | U | 0.50 | < 1.0 | 1.0 | U | 0.25 | < 2.0 | 2.0 | U | 0.50 | < 1.0 | 1.0 | U | 0.25 | < 2.0 | 2.0 | U | 0.50 | < 2.0 | 2.0 | U | 0.50 |
| 1,2,4-Trichlorobenzene | 120-82-1 | | | < 2.0 | 2.0 | U | 0.50 | < 1.0 | 1.0 | U | 0.25 | < 2.0 | 2.0 | U | 0.50 | < 1.0 | 1.0 | U | 0.25 | < 2.0 | 2.0 | U | 0.50 | < 2.0 | 2.0 | U | 0.50 |
| 1,2-Dibromo-3-chloropropane | 96-12-8 | | 0.04 | < 2.0 | 2.0 | U | 1.0 | < 1.0 | 1.0 | U | 0.50 | < 2.0 | 2.0 | U | 1.0 | < 1.0 | 1.0 | U | 0.50 | < 1 | 1 | U | 1.0 | < 1 | 1 | U | 1.0 |
| 1,2-Dibromoethane | 106-93-4 | | 0.0006 | < 2.0 | 2.0 | U | 0.50 | < 1.0 | 1.0 | U | 0.25 | < 2.0 | 2.0 | U | 0.50 | < 1.0 | 1.0 | U | 0.25 | < 1 | 1 | U | 0.50 | < 1 | 1 | U | 0.50 |
| 1,2-Dichlorobenzene | 95-50-1 | 4.7 | | < 4.0 | 4.0 | U | 0.50 | < 2.0 | 2.0 | U | 0.25 | < 4.0 | 4.0 | U | 0.50 | < 2.0 | 2.0 | U | 0.25 | < 4.0 | 4.0 | U | 0.50 | < 4.0 | 4.0 | U | 0.50 |
| 1,2-Dichloroethane | 107-06-2 | 5 | 0.6 | < 2.0 | 2.0 | U | 0.50 | < 1.0 | 1.0 | U | 0.25 | < 2.0 | 2.0 | U | 0.50 | < 0.6 | 0.6 | U | 0.25 | < 0.6 | 0.6 | U | 0.50 | < 0.5 | 0.5 | U | 0.50 |
| 1,2-Dichloropropane | 78-87-5 | | 1 | < 2.0 | 2.0 | U | 0.50 | < 1.0 | 1.0 | U | 0.25 | < 2.0 | 2.0 | U | 0.50 | < 1.0 | 1.0 | U | 0.25 | < 1 | 1 | U | 0.50 | < 1 | 1 | U | 0.50 |
| 1,3-Dichlorobenzene | 541-73-1 | 5 | 3 | < 4.0 | 4.0 | U | 0.50 | < 2.0 | 2.0 | U | 0.25 | < 4.0 | 4.0 | U | 0.50 | < 2.0 | 2.0 | U | 0.25 | < 2.0 | 2.0 | U | 0.50 | < 2.0 | 2.0 | U | 0.50 |
| 1,4-Dichlorobenzene | 106-46-7 | 5 | | < 4.0 | 4.0 | U | 0.50 | < 2.0 | 2.0 | U | 0.25 | < 4.0 | 4.0 | U | 0.50 | < 2.0 | 2.0 | U | 0.25 | < 4.0 | 4.0 | U | 0.50 | < 4.0 | 4.0 | U | 0.50 |
| 2-Hexanone | 591-78-6 | | 50 | < 5.0 | 5.0 | U | 5.0 | < 2.5 | 2.5 | U | 2.5 | < 5.0 | 5.0 | U | 5.0 | < 2.5 | 2.5 | U | 2.5 | < 5.0 | 5.0 | U | 5.0 | < 5.0 | 5.0 | U | 5.0 |
| 4-Methyl-2-pentanone | 108-10-1 | 50 | | < 5.0 | 5.0 | U | 5.0 | < 2.5 | 2.5 | U | 2.5 | < 5.0 | 5.0 | U | 5.0 | < 2.5 | 2.5 | U | 2.5 | < 5.0 | 5.0 | U | 5.0 | < 5.0 | 5.0 | U | 5.0 |
| Acetone | 67-64-1 | 50 | 50 | 12 | 10 | S | 5.0 | 2.6 | 5.0 | JS | 2.5 | < 10 | 10 | U | 5.0 | 4.1 | 5.0 | JS | 2.5 | 6.8 | 10 | JS | 5.0 | 10 | 10 | S | 5.0 |
| Benzene | 71-43-2 | 0.7 | 1 | < 1.4 | 1.4 | U | 0.50 | < 0.70 | 0.70 | U | 0.25 | < 1.4 | 1.4 | U | 0.50 | < 0.70 | 0.70 | U | 0.25 | < 0.7 | 0.7 | U | 0.50 | < 0.7 | 0.7 | U | 0.50 |
| Bromochloromethane | 74-97-5 | | 5 | < 2.0 | 2.0 | U | 0.50 | < 1.0 | 1.0 | U | 0.25 | < 2.0 | 2.0 | U | 0.50 | < 1.0 | 1.0 | U | 0.25 | < 2.0 | 2.0 | U | 0.50 | < 2.0 | 2.0 | U | 0.50 |
| Bromodichloromethane | 75-27-4 | | 50 | < 2.0 | 2.0 | U | 0.50 | < 1.0 | 1.0 | U | 0.25 | < 2.0 | 2.0 | U | 0.50 | < 1.0 | 1.0 | U | 0.25 | < 2.0 | 2.0 | U | 0.50 | < 2.0 | 2.0 | U | 0.50 |
| Bromoform | 75-25-2 | | 50 | < 2.0 | 2.0 | U | 0.50 | < 1.0 | 1.0 | U | 0.25 | < 2.0 | 2.0 | U | 0.50 | < 1.0 | 1.0 | U | 0.25 | < 2.0 | 2.0 | U | 0.50 | < 2.0 | 2.0 | U | 0.50 |
| Bromomethane | 74-83-9 | | 5 | < 4.0 | 4.0 | U | 0.50 | < 2.0 | 2.0 | U | 0.25 | < 4.0 | 4.0 | U | 0.50 | < 2.0 | 2.0 | U | 0.25 | < 4.0 | 4.0 | U | 0.50 | < 4.0 | 4.0 | U | 0.50 |
| Carbon Disulfide | 75-15-0 | 50 | | < 2.0 | 2.0 | U | 0.50 | < 1.0 | 1.0 | U | 0.25 | < 2.0 | 2.0 | U | 0.50 | < 1.0 | 1.0 | U | 0.25 | < 2.0 | 2.0 | U | 0.50 | < 2.0 | 2.0 | U | 0.50 |
| Carbon tetrachloride | 56-23-5 | 5 | 5 | < 2.0 | 2.0 | U | 0.50 | < 1.0 | 1.0 | U | 0.25 | < 2.0 | 2.0 | U | 0.50 | < 1.0 | 1.0 | U | 0.25 | < 2.0 | 2.0 | U | 0.50 | < 2.0 | 2.0 | U | 0.50 |
| Chlorobenzene | 108-90-7 | 5 | 5 | < 4.0 | 4.0 | U | 0.50 | < 2.0 | 2.0 | U | 0.25 | < 4.0 | 4.0 | U | 0.50 | < 2.0 | 2.0 | U | 0.25 | < 4.0 | 4.0 | U | 0.50 | < 4.0 | 4.0 | U | 0.50 |
| Chloroethane | 75-00-3 | 50 | 5 | < 4.0 | 4.0 | U | 0.50 | < 2.0 | 2.0 | U | 0.25 | < 4.0 | 4.0 | U | 0.50 | < 2.0 | 2.0 | U | 0.25 | < 4.0 | 4.0 | U | 0.50 | < 4.0 | 4.0 | U | 0.50 |
| Chloroform | 67-66-3 | 7 | 7 | < 4.0 | 4.0 | U | 0.50 | < 2.0 | 2.0 | U | 0.25 | < 4.0 | 4.0 | U | 0.50 | < 2.0 | 2.0 | U | 0.25 | < 4.0 | 4.0 | U | 0.50 | < 4.0 | 4.0 | U | 0.50 |
| Chloromethane | 74-87-3 | | 5 | < 4.0 | 4.0 | U | 0.50 | < 2.0 | 2.0 | U | 0.25 | < 4.0 | 4.0 | U | 0.50 | < 2.0 | 2.0 | U | 0.25 | < 4.0 | 4.0 | U | 0.50 | < 4.0 | 4.0 | U | 0.50 |
| cis-1,2-Dichloroethene | 156-59-2 | | 5 | < 2.0 | 2.0 | U | 0.50 | < 1.0 | 1.0 | U | 0.25 | < 2.0 | 2.0 | U | 0.50 | < 1.0 | 1.0 | U | 0.25 | < 2.0 | 2.0 | U | 0.50 | < 2.0 | 2.0 | U | 0.50 |
| cis-1,3-Dichloropropene | 10061-01-5 | | 0.4 | < 0.80 | 0.80 | U | 0.50 | < 0.40 | 0.40 | U | 0.25 | < 0.80 | 0.80 | U | 0.50 | < 0.40 | 0.40 | U | 0.25 | < 0.5 | 0.5 | U | 0.50 | < 0.5 | 0.5 | U | 0.50 |
| Cyclohexane | 110-82-7 | | | < 10 | 10 | U | 1.0 | < 5.0 | 5.0 | U | 0.50 | < 10 | 10 | U | 1.0 | < 5.0 | 5.0 | U | 0.50 | < 10 | 10 | U | 1.0 | < 10 | 10 | U | 1.0 |
| Dibromochloromethane | 124-48-1 | 50 | 50 | < 2.0 | 2.0 | U | 0.50 | < 1.0 | 1.0 | U | 0.25 | < 2.0 | 2.0 | U | 0.50 | < 1.0 | 1.0 | U | 0.25 | < 2.0 | 2.0 | U | 0.50 | < 2.0 | 2.0 | U | 0.50 |
| Dichlorodifluoromethane | 75-71-8 | | 5 | < 2.0 | 2.0 | U | 0.50 | 8.9 | 1.0 | | 0.25 | < 2.0 | 2.0 | U | 0.50 | < 1.0 | 1.0 | U | 0.25 | < 2.0 | 2.0 | U | 0.50 | < 2.0 | 2.0 | U | 0.50 |
| Ethylbenzene | 100-41-4 | 5 | 5 | < 2.0 | 2.0 | U | 0.50 | < 1.0 | 1.0 | U | 0.25 | < 2.0 | 2.0 | U | 0.50 | < 1.0 | 1.0 | U | 0.25 | < 2.0 | 2.0 | U | 0.50 | < 2.0 | 2.0 | U | 0.50 |
| Isopropylbenzene | 98-82-8 | | 5 | < 2.0 | 2.0 | U | 0.50 | < 1.0 | 1.0 | U | 0.25 | 5.8 | 2.0 | | 0.50 | < 1.0 | 1.0 | U | 0.25 | < 2.0 | 2.0 | U | 0.50 | < 2.0 | 2.0 | U | 0.50 |
| m&p-Xylene | 179601-23-1 | | | < 2.0 | 2.0 | U | 0.50 | < 1.0 | 1.0 | U | 0.25 | < 2.0 | 2.0 | U | 0.50 | < 1.0 | 1.0 | U | 0.25 | < 2.0 | 2.0 | U | 0.50 | < 2.0 | 2.0 | U | 0.50 |
| Methyl ethyl ketone | 78-93-3 | 50 | 50 | < 10 | 10 | U | 5.0 | < 5.0 | 5.0 | U | 2.5 | < 10 | 10 | U | 5.0 | < 5.0 | 5.0 | U | 2.5 | < 10 | 10 | U | 5.0 | < 10 | 10 | U | 5.0 |
| Methyl t-butyl ether (MTBE) | 1634-04-4 | | | 0.82 | 2.0 | J | 0.50 | < 1.0 | 1.0 | U | 0.25 | < 2.0 | 2.0 | U | 0.50 | 1.4 | 1.0 | | 0.25 | 2 | 2.0 | J | 0.50 | 3.2 | 2.0 | | 0.50 |
| Methylacetate | 79-20-9 | | | < 5.0 | 5.0 | U | 5.0 | < 2.5 | 2.5 | U | 2.5 | < 5.0 | 5.0 | U | 5.0 | < 2.5 | 2.5 | U | 2.5 | < 5.0 | 5.0 | U | 5.0 | < 5.0 | 5.0 | U | 5.0 |
| Methylcyclohexane | 108-87-2 | | | < 4.0 | 4.0 | U | 1.0 | < 2.0 | 2.0 | U | 0.50 | 4.8 | 4.0 | | 1.0 | < 2.0 | 2.0 | U | 0.50 | < 4.0 | 4.0 | U | 1.0 | < 4.0 | 4.0 | U | 1.0 |
| Methylene chloride | 75-09-2 | 5 | 5 | < 6.0 | 6.0 | U | 2.0 | < 3.0 | 3.0 | U | 1.0 | < 6.0 | 6.0 | U | 2.0 | < 3.0 | 3.0 | U | 1.0 | < 5 | 5 | U | 2.0 | < 5 | 5 | U | 2.0 |
| o-Xylene | 95-47-6 | 5 | 5 | < 2.0 | 2.0 | U | 0.50 | < 1.0 | 1.0 | U | 0.25 | < 2.0 | 2.0 | U | 0.50 | < 1.0 | 1.0 | U | 0.25 | < 2.0 | 2.0 | U | 0.50 | < 2.0 | 2.0 | U | 0.50 |
| Styrene | 100-42-5 | | 5 | < 2.0 | 2.0 | U | 0.50 | < 1.0 | 1.0 | U | 0.25 | < 2.0 | 2.0 | U | 0.50 | < 1.0 | 1.0 | U | 0.25 | < 2.0 | 2.0 | U | 0.50 | < 2.0 | 2.0 | U | 0.50 |
| Tetrachloroethene | 127-18-4 | 5 | 5 | < 2.0 | 2.0 | U | 0.50 | < 1.0 | 1.0 | U | 0.25 | < 2.0 | 2.0 | U | 0.50 | < 1.0 | 1.0 | U | 0.25 | < 2.0 | 2.0 | U | 0.50 | < 2.0 | 2.0 | U | 0.50 |
| Toluene | 108-88-3 | 5 | 5 | < 4.0 | 4.0 | U | 0.50 | < 2.0 | 2.0 | U | 0.25 | < 4.0 | 4.0 | U | 0.50 | < 2.0 | 2.0 | U | 0.25 | < 4.0 | 4.0 | U | 0.50 | < 4.0 | 4.0 | U | 0.50 |
| Total Xylenes | 1330-20-7 | 5 | 5 | < 1.7 | 1.7 | U | 0.50 | < 0.87 | 0.87 | U | 0.25 | < 1.7 | 1.7 | U | 0.50 | < 0.87 | 0.87 | U | 0.25 | < 1.7 | 1.7 | U | 0.50 | < 1.7 | 1.7 | U | 0.50 |
| trans-1,2-Dichloroethene | 156-60-5 | 5 | 5 | < 4.0 | 4.0 | U | 0.50 | < 2.0 | 2.0 | U | 0.25 | < 4.0 | 4.0 | U | 0.50 | < 2.0 | 2.0 | U | 0.25 | < 4.0 | 4.0 | U | 0.50 | < 4.0 | 4.0 | U | 0.50 |
| trans-1,3-Dichloropropene | 10061-02-6 | | 0.4 | < 0.80 | 0.80 | U | 0.50 | < 0.40 | 0.40 | U | 0.25 | < 0.80 | 0.80 | U | 0.50 | < 0.40 | 0.40 | U | 0.25 | < 0.5 | 0.5 | U | 0.50 | < 0.5 | 0.5 | U | 0.50 |

**TABLE 3A**
**GROUNDWATER LABORATORY ANALYTICAL RESULTS SUMMARY**

**REMEDIAL INVESTIGATION**
**109-125 MARBLEDALE ROAD**
**TUCKAHOE, NEW YORK**
**BCP #C360143**

| Analyte | Lab Sample Id | | | BJ21609 | | | | BJ21610 | | | | BJ21611 | | | | BJ20803 | | | | BJ20804 | | | | BJ20805 | | | |
|---|---|---|---|---|---|---|---|---|---|---|---|---|---|---|---|---|---|---|---|---|---|---|---|---|---|---|---|
| | Collection Date | | | 5/22/2015 | | | | 5/22/2015 | | | | 5/22/2015 | | | | 5/21/2015 | | | | 5/21/2015 | | | | 5/21/2015 | | | |
| | Client Id | | | MW-1 | | | | MW-2 | | | | MW-3 | | | | MW-104 | | | | MW-4 | | | | MW-5 | | | |
| | Matrix | | | Ground Water | | | | Ground Water | | | | Ground Water | | | | Ground Water | | | | Ground Water | | | | Ground Water | | | |
| | CAS | TAGM-GW | TOGS-WQ/GA | Result | RL | Qual | MDL | Result | RL | Qual | MDL | Result | RL | Qual | MDL | Result | RL | Qual | MDL | Result | RL | Qual | MDL | Result | RL | Qual | MDL |
| Trichloroethene | 79-01-6 | 5 | 5 | < 2.0 | 2.0 | U | 0.50 | < 1.0 | 1.0 | U | 0.25 | < 2.0 | 2.0 | U | 0.50 | < 1.0 | 1.0 | U | 0.25 | < 2.0 | 2.0 | U | 0.50 | < 2.0 | 2.0 | U | 0.50 |
| Trichlorofluoromethane | 75-69-4 | | 5 | < 2.0 | 2.0 | U | 0.50 | < 1.0 | 1.0 | U | 0.25 | < 2.0 | 2.0 | U | 0.50 | < 1.0 | 1.0 | U | 0.25 | < 2.0 | 2.0 | U | 0.50 | < 2.0 | 2.0 | U | 0.50 |
| Trichlorotrifluoroethane | 76-13-1 | 5 | 5 | < 2.0 | 2.0 | U | 0.50 | < 1.0 | 1.0 | U | 0.25 | < 2.0 | 2.0 | U | 0.50 | < 1.0 | 1.0 | U | 0.25 | < 2.0 | 2.0 | U | 0.50 | < 2.0 | 2.0 | U | 0.50 |
| Vinyl chloride | 75-01-4 | 2 | 2 | < 2.0 | 2.0 | U | 0.50 | < 1.0 | 1.0 | U | 0.25 | < 2.0 | 2.0 | U | 0.50 | < 1.0 | 1.0 | U | 0.25 | < 2.0 | 2.0 | U | 0.50 | < 2.0 | 2.0 | U | 0.50 |
| **1,4-dioxane By SW8260C (ug/L)** | | | | | | | | | | | | | | | | | | | | | | | | | | | |
| 1,4-dioxane | 123-91-1 | | | < 200 | 200 | U | 100 | < 100 | 100 | U | 50 | < 200 | 200 | U | 100 | < 100 | 100 | U | 50 | < 200 | 200 | U | 100 | < 200 | 200 | U | 100 |
| **Semivolatiles By SW8270D (SIM) (ug/L)** | | | | | | | | | | | | | | | | | | | | | | | | | | | |
| 1,1-Biphenyl | 92-52-4 | | 5 | < 0.51 | 0.51 | U | 0.51 | < 0.50 | 0.50 | U | 0.50 | < 0.67 | 0.67 | U | 0.67 | < 0.50 | 0.50 | U | 0.50 | < 0.50 | 0.50 | U | 0.50 | < 0.50 | 0.50 | U | 0.50 |
| 1,2,4,5-Tetrachlorobenzene | 95-94-3 | | | < 0.51 | 0.51 | U | 0.51 | < 0.50 | 0.50 | U | 0.50 | < 0.67 | 0.67 | U | 0.67 | < 0.50 | 0.50 | U | 0.50 | < 0.50 | 0.50 | U | 0.50 | < 0.50 | 0.50 | U | 0.50 |
| 2,3,4,6-tetrachlorophenol | 58-90-2 | | 1 | < 0.21 | 0.21 | U | 0.21 | < 0.20 | 0.20 | U | 0.20 | < 0.27 | 0.27 | U | 0.27 | < 0.20 | 0.20 | U | 0.20 | < 0.20 | 0.20 | U | 0.20 | < 0.20 | 0.20 | U | 0.20 |
| 2,4,5-Trichlorophenol | 95-95-4 | 1 | 1 | < 0.21 | 0.21 | U | 0.21 | < 0.20 | 0.20 | U | 0.20 | < 0.27 | 0.27 | U | 0.27 | < 0.20 | 0.20 | U | 0.20 | < 0.20 | 0.20 | U | 0.20 | < 0.20 | 0.20 | U | 0.20 |
| 2,4,6-Trichlorophenol | 88-06-2 | | 1 | < 0.21 | 0.21 | U | 0.21 | < 0.20 | 0.20 | U | 0.20 | < 0.27 | 0.27 | U | 0.27 | < 0.20 | 0.20 | U | 0.20 | < 0.20 | 0.20 | U | 0.20 | < 0.20 | 0.20 | U | 0.20 |
| 2,4-Dichlorophenol | 120-83-2 | 1 | 5 | < 0.21 | 0.21 | U | 0.21 | < 0.20 | 0.20 | U | 0.20 | < 0.27 | 0.27 | U | 0.27 | < 0.20 | 0.20 | U | 0.20 | < 0.20 | 0.20 | U | 0.20 | < 0.20 | 0.20 | U | 0.20 |
| 2,4-Dimethylphenol | 105-67-9 | | 1 | < 0.21 | 0.21 | U | 0.21 | < 0.20 | 0.20 | U | 0.20 | < 0.27 | 0.27 | U | 0.27 | < 0.20 | 0.20 | U | 0.20 | < 0.20 | 0.20 | U | 0.20 | < 0.20 | 0.20 | U | 0.20 |
| 2-Chlorophenol | 95-57-8 | 50 | 1 | < 0.21 | 0.21 | U | 0.21 | < 0.20 | 0.20 | U | 0.20 | < 0.27 | 0.27 | U | 0.27 | < 0.20 | 0.20 | U | 0.20 | < 0.20 | 0.20 | U | 0.20 | < 0.20 | 0.20 | U | 0.20 |
| 2-Methylphenol (o-cresol) | 95-48-7 | 5 | 1 | < 0.21 | 0.21 | U | 0.21 | < 0.20 | 0.20 | U | 0.20 | < 0.27 | 0.27 | U | 0.27 | < 0.20 | 0.20 | U | 0.20 | < 0.20 | 0.20 | U | 0.20 | < 0.20 | 0.20 | U | 0.20 |
| 2-Nitrophenol | 88-75-5 | 5 | 1 | < 0.21 | 0.21 | U | 0.21 | < 0.20 | 0.20 | U | 0.20 | < 0.27 | 0.27 | U | 0.27 | < 0.20 | 0.20 | U | 0.20 | < 0.20 | 0.20 | U | 0.20 | < 0.20 | 0.20 | U | 0.20 |
| 4-Chloro-3-methylphenol | 59-50-7 | 5 | 1 | < 0.21 | 0.21 | U | 0.21 | < 0.20 | 0.20 | U | 0.20 | < 0.27 | 0.27 | U | 0.27 | < 0.20 | 0.20 | U | 0.20 | < 0.20 | 0.20 | U | 0.20 | < 0.20 | 0.20 | U | 0.20 |
| 4-Nitrophenol | 100-02-7 | 5 | 1 | < 0.21 | 0.21 | U | 0.21 | < 0.20 | 0.20 | U | 0.20 | < 0.27 | 0.27 | U | 0.27 | < 0.20 | 0.20 | U | 0.20 | < 0.20 | 0.20 | U | 0.20 | < 0.20 | 0.20 | U | 0.20 |
| Acenaphthylene | 208-96-8 | 20 | | < 0.31 | 0.31 | U | 0.31 | < 0.30 | 0.30 | U | 0.30 | < 0.40 | 0.40 | U | 0.40 | < 0.30 | 0.30 | U | 0.30 | < 0.30 | 0.30 | U | 0.30 | < 0.30 | 0.30 | U | 0.30 |
| Anthracene | 120-12-7 | 50 | 50 | 0.22 | 0.21 | | 0.21 | < 0.20 | 0.20 | U | 0.20 | 0.34 | 0.27 | | 0.27 | < 0.20 | 0.20 | U | 0.20 | < 0.20 | 0.20 | U | 0.20 | < 0.20 | 0.20 | U | 0.20 |
| Atrazine | 1912-24-9 | | 7.5 | < 0.51 | 0.51 | U | 0.51 | < 0.50 | 0.50 | U | 0.50 | < 0.67 | 0.67 | U | 0.67 | < 0.50 | 0.50 | U | 0.50 | < 0.50 | 0.50 | U | 0.50 | < 0.50 | 0.50 | U | 0.50 |
| Benz(a)anthracene | 56-55-3 | 0.002 | 0.002 | 0.23 | 0.02 | | 0.02 | 0.02 | 0.02 | | 0.02 | 0.13 | 0.03 | | 0.03 | 0.06 | 0.02 | | 0.02 | 0.08 | 0.02 | | 0.02 | 0.05 | 0.02 | | 0.02 |
| Benzo(a)pyrene | 50-32-8 | 0.002 | | 0.26 | 0.02 | | 0.02 | < 0.02 | 0.02 | U | 0.02 | 0.11 | 0.03 | | 0.03 | 0.05 | 0.02 | | 0.02 | 0.07 | 0.02 | | 0.02 | 0.03 | 0.02 | | 0.02 |
| Benzo(b)fluoranthene | 205-99-2 | 0.002 | 0.002 | 0.37 | 0.02 | | 0.02 | < 0.02 | 0.02 | U | 0.02 | 0.14 | 0.03 | | 0.03 | 0.07 | 0.02 | | 0.02 | 0.11 | 0.02 | | 0.02 | 0.06 | 0.02 | | 0.02 |
| Benzo(ghi)perylene | 191-24-2 | 5 | | < 0.21 | 0.21 | U | 0.21 | < 0.20 | 0.20 | U | 0.20 | < 0.27 | 0.27 | U | 0.27 | < 0.20 | 0.20 | U | 0.20 | < 0.20 | 0.20 | U | 0.20 | < 0.20 | 0.20 | U | 0.20 |
| Benzo(k)fluoranthene | 207-08-9 | 0.002 | 0.002 | 0.14 | 0.02 | | 0.02 | < 0.02 | 0.02 | U | 0.02 | 0.05 | 0.03 | | 0.03 | 0.03 | 0.02 | | 0.02 | 0.04 | 0.02 | | 0.02 | 0.03 | 0.02 | | 0.02 |
| Bis(2-chloroethyl)ether | 111-44-4 | | 1 | < 0.21 | 0.21 | U | 0.21 | < 0.20 | 0.20 | U | 0.20 | < 0.27 | 0.27 | U | 0.27 | < 0.20 | 0.20 | U | 0.20 | < 0.20 | 0.20 | U | 0.20 | < 0.20 | 0.20 | U | 0.20 |
| Bis(2-ethylhexyl)phthalate | 117-81-7 | 50 | 5 | 0.78 | 0.31 | | 0.31 | 2 | 0.30 | | 0.30 | 2.6 | 0.40 | | 0.40 | 1 | 0.30 | | 0.30 | 0.89 | 0.30 | | 0.30 | 0.4 | 0.30 | | 0.30 |
| Chrysene | 218-01-9 | 0.002 | 0.002 | 0.23 | 0.02 | | 0.02 | < 0.02 | 0.02 | U | 0.02 | 0.11 | 0.03 | | 0.03 | 0.05 | 0.02 | | 0.02 | 0.08 | 0.02 | | 0.02 | 0.07 | 0.02 | | 0.02 |
| Dibenz(a,h)anthracene | 53-70-3 | 50 | | < 0.02 | 0.02 | U | 0.02 | < 0.02 | 0.02 | U | 0.02 | < 0.03 | 0.03 | U | 0.03 | < 0.02 | 0.02 | U | 0.02 | < 0.02 | 0.02 | U | 0.02 | < 0.02 | 0.02 | U | 0.02 |
| Fluoranthene | 206-44-0 | 50 | 50 | 0.53 | 0.21 | | 0.21 | < 0.20 | 0.20 | U | 0.20 | 0.45 | 0.27 | | 0.27 | < 0.20 | 0.20 | U | 0.20 | < 0.20 | 0.20 | U | 0.20 | 0.22 | 0.20 | | 0.20 |
| Fluorene | 86-73-7 | 50 | 50 | < 0.21 | 0.21 | U | 0.21 | < 0.20 | 0.20 | U | 0.20 | 1.4 | 0.27 | | 0.27 | < 0.20 | 0.20 | U | 0.20 | < 0.20 | 0.20 | U | 0.20 | 0.53 | 0.20 | | 0.20 |
| Hexachlorobenzene | 118-74-1 | 0.35 | 0.04 | < 0.02 | 0.02 | U | 0.02 | < 0.02 | 0.02 | U | 0.02 | < 0.03 | 0.03 | U | 0.03 | < 0.02 | 0.02 | U | 0.02 | < 0.02 | 0.02 | U | 0.02 | < 0.02 | 0.02 | U | 0.02 |
| Hexachlorobutadiene | 87-68-3 | | 0.5 | < 0.21 | 0.21 | U | 0.21 | < 0.20 | 0.20 | U | 0.20 | < 0.27 | 0.27 | U | 0.27 | < 0.20 | 0.20 | U | 0.20 | < 0.20 | 0.20 | U | 0.20 | < 0.20 | 0.20 | U | 0.20 |
| Hexachloroethane | 67-72-1 | | 5 | < 0.21 | 0.21 | U | 0.21 | < 0.20 | 0.20 | U | 0.20 | < 0.27 | 0.27 | U | 0.27 | < 0.20 | 0.20 | U | 0.20 | < 0.20 | 0.20 | U | 0.20 | < 0.20 | 0.20 | U | 0.20 |
| Indeno(1,2,3-cd)pyrene | 193-39-5 | 0.002 | 0.002 | 0.12 | 0.02 | | 0.02 | < 0.02 | 0.02 | U | 0.02 | 0.05 | 0.03 | | 0.03 | 0.03 | 0.02 | | 0.02 | 0.04 | 0.02 | | 0.02 | < 0.02 | 0.02 | U | 0.02 |
| Nitrobenzene | 98-95-3 | 5 | 0.4 | < 0.21 | 0.21 | U | 0.21 | < 0.20 | 0.20 | U | 0.20 | < 0.27 | 0.27 | U | 0.27 | < 0.20 | 0.20 | U | 0.20 | < 0.20 | 0.20 | U | 0.20 | < 0.20 | 0.20 | U | 0.20 |
| N-Nitrosodimethylamine | 62-75-9 | | | < 0.21 | 0.21 | U | 0.21 | < 0.20 | 0.20 | U | 0.20 | < 0.27 | 0.27 | U | 0.27 | < 0.20 | 0.20 | U | 0.20 | < 0.20 | 0.20 | U | 0.20 | < 0.20 | 0.20 | U | 0.20 |
| Pentachlorophenol | 87-86-5 | 1 | 1 | < 0.21 | 0.21 | U | 0.21 | < 0.20 | 0.20 | U | 0.20 | < 0.27 | 0.27 | U | 0.27 | < 0.20 | 0.20 | U | 0.20 | < 0.20 | 0.20 | U | 0.20 | < 0.20 | 0.20 | U | 0.20 |
| Phenanthrene | 85-01-8 | 50 | 50 | 0.32 | 0.05 | | 0.05 | < 0.05 | 0.05 | U | 0.05 | 0.35 | 0.07 | | 0.07 | 0.1 | 0.05 | | 0.05 | 0.16 | 0.05 | | 0.05 | 0.52 | 0.05 | | 0.05 |
| Phenol | 108-95-2 | 1 | 1 | < 0.21 | 0.21 | U | 0.21 | < 0.20 | 0.20 | U | 0.20 | < 0.27 | 0.27 | U | 0.27 | < 0.20 | 0.20 | U | 0.20 | < 0.20 | 0.20 | U | 0.20 | 2.4 | 0.20 | | 0.20 |
| Pyrene | 129-00-0 | 50 | 50 | 0.49 | 0.21 | | 0.21 | < 0.20 | 0.20 | U | 0.20 | 0.37 | 0.27 | | 0.27 | < 0.20 | 0.20 | U | 0.20 | < 0.20 | 0.20 | U | 0.20 | < 0.20 | 0.20 | U | 0.20 |
| **Semivolatiles By SW8270D (ug/L)** | | | | | | | | | | | | | | | | | | | | | | | | | | | |
| 2,4-Dinitrophenol | 51-28-5 | 5 | 5 | < 1.0 | 1.0 | U | 0.92 | < 1 | 1 | U | 0.90 | < 1.0 | 1.0 | U | 1.0 | < 1.0 | 1.0 | U | 0.90 | < 1.0 | 1.0 | U | 0.90 | < 1.0 | 1.0 | U | 0.90 |
| 2,4-Dinitrotoluene | 121-14-2 | | 5 | < 5.0 | 5.0 | U | 2.0 | < 5.0 | 5.0 | U | 2.0 | < 5.0 | 5.0 | U | 2.6 | < 5.0 | 5.0 | U | 2.0 | < 5.0 | 5.0 | U | 2.0 | < 5.0 | 5.0 | U | 2.0 |

**TABLE 3A**
**GROUNDWATER LABORATORY ANALYTICAL RESULTS SUMMARY**

**REMEDIAL INVESTIGATION**
**109-125 MARBLEDALE ROAD**
**TUCKAHOE, NEW YORK**
**BCP #C360143**

| Analyte | Lab Sample Id / Collection Date / Client Id / Matrix | | | BJ21609 / 5/22/2015 / MW-1 / Ground Water | | | | BJ21610 / 5/22/2015 / MW-2 / Ground Water | | | | BJ21611 / 5/22/2015 / MW-3 / Ground Water | | | | BJ20803 / 5/21/2015 / MW-104 / Ground Water | | | | BJ20804 / 5/21/2015 / MW-4 / Ground Water | | | | BJ20805 / 5/21/2015 / MW-5 / Ground Water | | | |
|---|---|---|---|---|---|---|---|---|---|---|---|---|---|---|---|---|---|---|---|---|---|---|---|---|---|---|---|
| | CAS | TAGM-GW | TOGS-WQ/GA | Result | RL | Qual | MDL | Result | RL | Qual | MDL | Result | RL | Qual | MDL | Result | RL | Qual | MDL | Result | RL | Qual | MDL | Result | RL | Qual | MDL |
| 2,6-Dinitrotoluene | 606-20-2 | 5 | 5 | < 5.0 | 5.0 | U | 1.6 | < 5.0 | 5.0 | U | 1.6 | < 5.0 | 5.0 | U | 2.1 | < 5.0 | 5.0 | U | 1.6 | < 5.0 | 5.0 | U | 1.6 | < 5.0 | 5.0 | U | 1.6 |
| 2-Chloronaphthalene | 91-58-7 | | 10 | < 5.1 | 5.1 | U | 1.5 | < 5.0 | 5.0 | U | 1.4 | < 6.7 | 6.7 | U | 1.9 | < 5.0 | 5.0 | U | 1.4 | < 5.0 | 5.0 | U | 1.4 | < 5.0 | 5.0 | U | 1.4 |
| 2-Methylnaphthalene | 91-57-6 | 50 | | < 5.1 | 5.1 | U | 1.5 | < 5.0 | 5.0 | U | 1.5 | < 6.7 | 6.7 | U | 2.0 | < 5.0 | 5.0 | U | 1.5 | < 5.0 | 5.0 | U | 1.5 | 2.1 | 5.0 | J | 1.5 |
| 2-Nitroaniline | 88-74-4 | 5 | 5 | < 5.0 | 5.0 | U | 5.1 | < 5.0 | 5.0 | U | 5.0 | < 5.0 | 5.0 | U | 6.7 | < 5.0 | 5.0 | U | 5.0 | < 5.0 | 5.0 | U | 5.0 | < 5.0 | 5.0 | U | 5.0 |
| 3&4-Methylphenol (m&p-cresol) | PHNX - M&P CRESOL | | | < 1.0 | 1.0 | U | 0.92 | < 1 | 1 | U | 0.90 | < 1.0 | 1.0 | U | 1.0 | < 1.0 | 1.0 | U | 0.90 | < 1.0 | 1.0 | U | 0.90 | 100 | 25 | | 4.5 |
| 3,3'-Dichlorobenzidine | 91-94-1 | | 5 | < 5.0 | 5.0 | U | 2.4 | < 5.0 | 5.0 | U | 2.4 | < 5.0 | 5.0 | U | 3.1 | < 5.0 | 5.0 | U | 2.4 | < 5.0 | 5.0 | U | 2.4 | < 5.0 | 5.0 | U | 2.4 |
| 3-Nitroaniline | 99-09-2 | 5 | 5 | < 5.0 | 5.0 | U | 11 | < 5.0 | 5.0 | U | 11 | < 5.0 | 5.0 | U | 15 | < 5.0 | 5.0 | U | 11 | < 5.0 | 5.0 | U | 11 | < 5.0 | 5.0 | U | 11 |
| 4,6-Dinitro-2-methylphenol | 534-52-1 | | 1 | < 1.0 | 1.0 | U | 1 | < 1 | 1 | U | 1 | < 1.0 | 1.0 | U | 1 | < 1.0 | 1.0 | U | 1.0 | < 1.0 | 1.0 | U | 5.4 | < 1.0 | 1.0 | U | 1.0 |
| 4-Bromophenyl phenyl ether | 101-55-3 | | | < 5.1 | 5.1 | U | 1.5 | < 5.0 | 5.0 | U | 1.5 | < 6.7 | 6.7 | U | 2.0 | < 5.0 | 5.0 | U | 1.5 | < 5.0 | 5.0 | U | 1.5 | < 5.0 | 5.0 | U | 1.5 |
| 4-Chloroaniline | 106-47-8 | 5 | 5 | < 5.0 | 5.0 | U | 2.4 | < 5.0 | 5.0 | U | 2.3 | < 5.0 | 5.0 | U | 3.1 | < 5.0 | 5.0 | U | 2.3 | < 5.0 | 5.0 | U | 2.3 | < 5.0 | 5.0 | U | 2.3 |
| 4-Chlorophenyl phenyl ether | 7005-72-3 | | | < 5.1 | 5.1 | U | 1.7 | < 5.0 | 5.0 | U | 1.7 | < 6.7 | 6.7 | U | 2.2 | < 5.0 | 5.0 | U | 1.7 | < 5.0 | 5.0 | U | 1.7 | < 5.0 | 5.0 | U | 1.7 |
| 4-Nitroaniline | 100-01-6 | | 5 | < 5.0 | 5.0 | U | 1.7 | < 5.0 | 5.0 | U | 1.7 | < 5.0 | 5.0 | U | 2.2 | < 5.0 | 5.0 | U | 1.7 | < 5.0 | 5.0 | U | 1.7 | < 5.0 | 5.0 | U | 1.7 |
| Acenaphthene | 83-32-9 | 20 | 20 | < 5.0 | 5.0 | U | 1.6 | < 5.0 | 5.0 | U | 1.5 | 2 | 6.7 | J | 2.0 | < 5.0 | 5.0 | U | 1.5 | < 5.0 | 5.0 | U | 1.5 | < 5.0 | 5.0 | U | 1.5 |
| Acetophenone | 98-86-2 | | | < 5.1 | 5.1 | U | 1.6 | < 5.0 | 5.0 | U | 1.6 | < 6.7 | 6.7 | U | 2.1 | < 5.0 | 5.0 | U | 1.6 | < 5.0 | 5.0 | U | 1.6 | < 5.0 | 5.0 | U | 1.6 |
| Benzaldehyde | 100-52-7 | | | < 5.1 | 5.1 | U | 1.5 | < 5.0 | 5.0 | U | 1.5 | < 6.7 | 6.7 | U | 2.0 | < 5.0 | 5.0 | U | 1.5 | < 5.0 | 5.0 | U | 1.5 | < 5.0 | 5.0 | U | 1.5 |
| Benzyl butyl phthalate | 85-68-7 | 50 | 50 | < 5.1 | 5.1 | U | 1.3 | < 5.0 | 5.0 | U | 1.3 | < 6.7 | 6.7 | U | 1.7 | < 5.0 | 5.0 | U | 1.3 | < 5.0 | 5.0 | U | 1.3 | < 5.0 | 5.0 | U | 1.3 |
| Bis(2-chloroethoxy)methane | 111-91-1 | | 5 | < 5.0 | 5.0 | U | 1.4 | < 5.0 | 5.0 | U | 1.4 | < 5.0 | 5.0 | U | 1.8 | < 5.0 | 5.0 | U | 1.4 | < 5.0 | 5.0 | U | 1.4 | < 5.0 | 5.0 | U | 1.4 |
| Bis(2-chloroisopropyl)ether | 39638-32-9 | | | < 5.1 | 5.1 | U | 1.4 | < 5.0 | 5.0 | U | 1.4 | < 6.7 | 6.7 | U | 1.9 | < 5.0 | 5.0 | U | 1.4 | < 5.0 | 5.0 | U | 1.4 | < 5.0 | 5.0 | U | 1.4 |
| Caprolactam | 105-60-2 | | | 110 | 26 | | 46 | 12 | 5.0 | | 8.9 | 46 | 6.7 | | 12 | < 5.0 | 5.0 | U | 8.9 | < 5.0 | 5.0 | U | 8.9 | < 5.0 | 5.0 | U | 8.9 |
| Carbazole | 86-74-8 | | | < 5.1 | 5.1 | U | 3.9 | < 5.0 | 5.0 | U | 3.8 | < 6.7 | 6.7 | U | 5.1 | < 5.0 | 5.0 | U | 3.8 | < 5.0 | 5.0 | U | 3.8 | < 5.0 | 5.0 | U | 3.8 |
| Dibenzofuran | 132-64-9 | 5 | | < 5.0 | 5.0 | U | 1.5 | < 5.0 | 5.0 | U | 1.5 | < 5.0 | 5.0 | U | 1.9 | < 5.0 | 5.0 | U | 1.5 | < 5.0 | 5.0 | U | 1.5 | < 5.0 | 5.0 | U | 1.5 |
| Diethyl phthalate | 84-66-2 | 50 | 50 | < 5.1 | 5.1 | U | 1.6 | < 5.0 | 5.0 | U | 1.6 | < 6.7 | 6.7 | U | 2.1 | < 5.0 | 5.0 | U | 1.6 | < 5.0 | 5.0 | U | 1.6 | < 5.0 | 5.0 | U | 1.6 |
| Dimethylphthalate | 131-11-3 | 50 | 50 | < 5.1 | 5.1 | U | 1.6 | < 5.0 | 5.0 | U | 1.6 | < 6.7 | 6.7 | U | 2.1 | < 5.0 | 5.0 | U | 1.6 | < 5.0 | 5.0 | U | 1.6 | < 5.0 | 5.0 | U | 1.6 |
| Di-n-butylphthalate | 84-74-2 | 50 | 50 | < 5.1 | 5.1 | U | 1.4 | < 5.0 | 5.0 | U | 1.3 | < 6.7 | 6.7 | U | 1.8 | < 5.0 | 5.0 | U | 1.3 | < 5.0 | 5.0 | U | 1.3 | < 5.0 | 5.0 | U | 1.3 |
| Di-n-octylphthalate | 117-84-0 | 50 | 50 | < 5.1 | 5.1 | U | 1.3 | < 5.0 | 5.0 | U | 1.3 | < 6.7 | 6.7 | U | 1.7 | < 5.0 | 5.0 | U | 1.3 | < 5.0 | 5.0 | U | 1.3 | < 5.0 | 5.0 | U | 1.3 |
| Hexachlorocyclopentadiene | 77-47-4 | | 5 | < 5.0 | 5.0 | U | 1.6 | < 5.0 | 5.0 | U | 1.5 | < 5.0 | 5.0 | U | 2.0 | < 5.0 | 5.0 | U | 1.5 | < 5.0 | 5.0 | U | 1.5 | < 5.0 | 5.0 | U | 1.5 |
| Isophorone | 78-59-1 | 50 | 50 | < 5.1 | 5.1 | U | 1.4 | < 5.0 | 5.0 | U | 1.4 | < 6.7 | 6.7 | U | 1.9 | < 5.0 | 5.0 | U | 1.4 | < 5.0 | 5.0 | U | 1.4 | < 5.0 | 5.0 | U | 1.4 |
| Naphthalene | 91-20-3 | 10 | 10 | < 5.0 | 5.0 | U | 1.5 | < 5.0 | 5.0 | U | 1.4 | < 5.0 | 5.0 | U | 1.9 | < 5.0 | 5.0 | U | 1.4 | < 5.0 | 5.0 | U | 1.4 | < 5.0 | 5.0 | U | 1.4 |
| N-Nitrosodi-n-propylamine | 621-64-7 | | | < 5.1 | 5.1 | U | 1.7 | < 5.0 | 5.0 | U | 1.6 | < 6.7 | 6.7 | U | 2.2 | < 5.0 | 5.0 | U | 1.6 | < 5.0 | 5.0 | U | 1.6 | < 5.0 | 5.0 | U | 1.6 |
| N-Nitrosodiphenylamine | 86-30-6 | | 50 | < 5.1 | 5.1 | U | 2.0 | < 5.0 | 5.0 | U | 1.9 | 15 | 6.7 | | 2.6 | < 5.0 | 5.0 | U | 1.9 | < 5.0 | 5.0 | U | 1.9 | < 5.0 | 5.0 | U | 1.9 |
| **Pesticides By SW8081B (ug/l)** | | | | | | | | | | | | | | | | | | | | | | | | | | | |
| 4,4' -DDD | 72-54-8 | 0.01 | 0.3 | < 0.065 | 0.065 | U | 0.065 | < 0.010 | 0.010 | U | 0.010 | < 0.010 | 0.010 | U | 0.010 | < 0.005 | 0.005 | U | 0.005 | < 0.010 | 0.010 | U | 0.010 | 0.038 | 0.010 | | 0.010 |
| 4,4' -DDE | 72-55-9 | 0.01 | 0.2 | < 0.035 | 0.035 | U | 0.035 | < 0.010 | 0.010 | U | 0.010 | < 0.010 | 0.010 | U | 0.010 | 0.019 | 0.010 | | 0.010 | 0.021 | 0.005 | | 0.005 | 0.051 | 0.010 | | 0.010 |
| 4,4' -DDT | 50-29-3 | 0.01 | 0.2 | < 0.035 | 0.035 | U | 0.035 | < 0.010 | 0.010 | U | 0.010 | < 0.010 | 0.010 | U | 0.010 | < 0.010 | 0.010 | U | 0.010 | < 0.010 | 0.010 | U | 0.010 | < 0.010 | 0.010 | U | 0.010 |
| a-BHC | 319-84-6 | 0.05 | 0.01 | < 0.005 | 0.005 | U | 0.005 | < 0.005 | 0.005 | U | 0.005 | < 0.005 | 0.005 | U | 0.005 | < 0.005 | 0.005 | U | 0.005 | < 0.005 | 0.005 | U | 0.005 | < 0.005 | 0.005 | U | 0.005 |
| a-chlordane | 5103-71-9 | | | < 0.020 | 0.020 | U | 0.020 | < 0.010 | 0.010 | U | 0.010 | < 0.010 | 0.010 | U | 0.010 | < 0.010 | 0.010 | U | 0.010 | < 0.010 | 0.010 | U | 0.010 | < 0.050 | 0.050 | U | 0.050 |
| Alachlor | 15972-60-8 | | 0.5 | < 0.075 | 0.075 | U | 0.075 | < 0.075 | 0.075 | U | 0.075 | < 0.075 | 0.075 | U | 0.075 | < 0.077 | 0.077 | U | 0.077 | < 0.075 | 0.075 | U | 0.075 | < 0.075 | 0.075 | U | 0.075 |
| Aldrin | 309-00-2 | 0.01 | | < 0.002 | 0.002 | U | 0.002 | < 0.005 | 0.005 | U | 0.005 | < 0.002 | 0.002 | U | 0.002 | < 0.002 | 0.002 | U | 0.002 | < 0.002 | 0.002 | U | 0.002 | < 0.010 | 0.010 | U | 0.010 |
| b-BHC | 319-85-7 | 0.05 | 0.04 | < 0.090 | 0.090 | U | 0.090 | < 0.005 | 0.005 | U | 0.005 | < 0.005 | 0.005 | U | 0.005 | < 0.005 | 0.005 | U | 0.005 | < 0.005 | 0.005 | U | 0.005 | < 0.005 | 0.005 | U | 0.005 |
| Chlordane | 57-74-9 | 0.1 | 0.05 | < 0.10 | 0.10 | U | 0.10 | < 0.10 | 0.10 | U | 0.10 | < 0.10 | 0.10 | U | 0.10 | < 0.05 | 0.05 | U | 0.05 | < 0.05 | 0.05 | U | 0.05 | < 0.05 | 0.05 | U | 0.05 |
| d-BHC | 319-86-8 | 0.05 | 0.04 | < 0.015 | 0.015 | U | 0.015 | < 0.005 | 0.005 | U | 0.005 | < 0.005 | 0.005 | U | 0.005 | < 0.005 | 0.005 | U | 0.005 | < 0.005 | 0.005 | U | 0.005 | < 0.005 | 0.005 | U | 0.005 |
| Dieldrin | 60-57-1 | 0.01 | 0.004 | < 0.040 | 0.040 | U | 0.040 | < 0.002 | 0.002 | U | 0.002 | < 0.002 | 0.002 | U | 0.002 | < 0.002 | 0.002 | U | 0.002 | < 0.002 | 0.002 | U | 0.002 | 0.012 | 0.002 | | 0.002 |
| Endosulfan I | 959-98-8 | 0.1 | | < 0.010 | 0.010 | U | 0.010 | < 0.010 | 0.010 | U | 0.010 | < 0.010 | 0.010 | U | 0.010 | < 0.010 | 0.010 | U | 0.010 | < 0.010 | 0.010 | U | 0.010 | < 0.010 | 0.010 | U | 0.010 |
| Endosulfan II | 33213-65-9 | 0.1 | | < 0.010 | 0.010 | U | 0.010 | < 0.010 | 0.010 | U | 0.010 | < 0.010 | 0.010 | U | 0.010 | < 0.010 | 0.010 | U | 0.010 | < 0.010 | 0.010 | U | 0.010 | < 0.010 | 0.010 | U | 0.010 |
| Endosulfan Sulfate | 1031-07-8 | 0.1 | | < 0.010 | 0.010 | U | 0.010 | < 0.010 | 0.010 | U | 0.010 | < 0.010 | 0.010 | U | 0.010 | < 0.010 | 0.010 | U | 0.010 | < 0.010 | 0.010 | U | 0.010 | < 0.010 | 0.010 | U | 0.010 |
| Endrin | 72-20-8 | 0.01 | | < 0.010 | 0.010 | U | 0.010 | < 0.010 | 0.010 | U | 0.010 | < 0.010 | 0.010 | U | 0.010 | < 0.005 | 0.005 | U | 0.005 | < 0.010 | 0.010 | U | 0.010 | < 0.010 | 0.010 | U | 0.010 |
| Endrin Aldehyde | 7421-93-4 | | 5 | < 0.015 | 0.015 | U | 0.015 | < 0.010 | 0.010 | U | 0.010 | < 0.010 | 0.010 | U | 0.010 | < 0.010 | 0.010 | U | 0.010 | < 0.010 | 0.010 | U | 0.010 | < 0.010 | 0.010 | U | 0.010 |
| Endrin ketone | 53494-70-5 | | 5 | < 0.010 | 0.010 | U | 0.010 | < 0.010 | 0.010 | U | 0.010 | < 0.010 | 0.010 | U | 0.010 | < 0.010 | 0.010 | U | 0.010 | < 0.010 | 0.010 | U | 0.010 | < 0.010 | 0.010 | U | 0.010 |

**TABLE 3A**
**GROUNDWATER LABORATORY ANALYTICAL RESULTS SUMMARY**

**REMEDIAL INVESTIGATION**
**109-125 MARBLEDALE ROAD**
**TUCKAHOE, NEW YORK**
**BCP #C360143**

| Analyte | Lab Sample Id / Collection Date / Client Id / Matrix | | | BJ21609 / 5/22/2015 / MW-1 / Ground Water | | | | BJ21610 / 5/22/2015 / MW-2 / Ground Water | | | | BJ21611 / 5/22/2015 / MW-3 / Ground Water | | | | BJ20803 / 5/21/2015 / MW-104 / Ground Water | | | | BJ20804 / 5/21/2015 / MW-4 / Ground Water | | | | BJ20805 / 5/21/2015 / MW-5 / Ground Water | | | |
|---|---|---|---|---|---|---|---|---|---|---|---|---|---|---|---|---|---|---|---|---|---|---|---|---|---|---|---|
| | CAS | TAGM-GW | TOGS-WQ/GA | Result | RL | Qual | MDL | Result | RL | Qual | MDL | Result | RL | Qual | MDL | Result | RL | Qual | MDL | Result | RL | Qual | MDL | Result | RL | Qual | MDL |
| g-BHC (Lindane) | 58-89-9 | 0.05 | 0.05 | < 0.006 | 0.006 | U | 0.006 | < 0.005 | 0.005 | U | 0.005 | < 0.005 | 0.005 | U | 0.005 | < 0.005 | 0.005 | U | 0.005 | < 0.005 | 0.005 | U | 0.005 | < 0.005 | 0.005 | U | 0.005 |
| g-chlordane | 5103-74-2 | 0.1 | | < 0.10 | 0.10 | U | 0.10 | < 0.010 | 0.010 | U | 0.010 | < 0.010 | 0.010 | U | 0.010 | < 0.020 | 0.020 | U | 0.020 | < 0.030 | 0.030 | U | 0.030 | < 0.050 | 0.050 | U | 0.050 |
| Heptachlor | 76-44-8 | 0.01 | 0.04 | < 0.010 | 0.010 | U | 0.010 | < 0.010 | 0.010 | U | 0.010 | < 0.010 | 0.010 | U | 0.010 | < 0.005 | 0.005 | U | 0.005 | < 0.010 | 0.010 | U | 0.010 | < 0.010 | 0.010 | U | 0.010 |
| Heptachlor epoxide | 1024-57-3 | 0.01 | 0.03 | < 0.010 | 0.010 | U | 0.010 | < 0.010 | 0.010 | U | 0.010 | < 0.010 | 0.010 | U | 0.010 | < 0.005 | 0.005 | U | 0.005 | < 0.010 | 0.010 | U | 0.010 | < 0.010 | 0.010 | U | 0.010 |
| Methoxychlor | 72-43-5 | 35 | 35 | < 0.10 | 0.10 | U | 0.10 | < 0.10 | 0.10 | U | 0.10 | < 0.10 | 0.10 | U | 0.10 | < 0.10 | 0.10 | U | 0.10 | < 0.10 | 0.10 | U | 0.10 | < 0.10 | 0.10 | U | 0.10 |
| Toxaphene | 8001-35-2 | | 0.06 | < 0.25 | 0.25 | U | 0.25 | < 0.25 | 0.25 | U | 0.25 | < 0.25 | 0.25 | U | 0.25 | < 0.26 | 0.26 | U | 0.26 | < 0.25 | 0.25 | U | 0.25 | < 0.25 | 0.25 | U | 0.25 |
| **PCBs By E608/SW8082A (ug/L)** | | | | | | | | | | | | | | | | | | | | | | | | | | | |
| PCB-1016 | 12674-11-2 | 0.09 | 0.09 | < 0.050 | 0.050 | U | 0.050 | < 0.050 | 0.050 | U | 0.050 | < 0.050 | 0.050 | U | 0.050 | < 0.051 | 0.051 | U | 0.051 | < 0.050 | 0.050 | U | 0.050 | < 0.050 | 0.050 | U | 0.050 |
| PCB-1221 | 11104-28-2 | 0.09 | 0.09 | < 0.050 | 0.050 | U | 0.050 | < 0.050 | 0.050 | U | 0.050 | < 0.050 | 0.050 | U | 0.050 | < 0.051 | 0.051 | U | 0.051 | < 0.050 | 0.050 | U | 0.050 | < 0.050 | 0.050 | U | 0.050 |
| PCB-1232 | 11141-16-5 | 0.09 | 0.09 | < 0.050 | 0.050 | U | 0.050 | < 0.050 | 0.050 | U | 0.050 | < 0.050 | 0.050 | U | 0.050 | < 0.051 | 0.051 | U | 0.051 | < 0.050 | 0.050 | U | 0.050 | < 0.050 | 0.050 | U | 0.050 |
| PCB-1242 | 53469-21-9 | 0.09 | 0.09 | < 0.050 | 0.050 | U | 0.050 | < 0.050 | 0.050 | U | 0.050 | < 0.050 | 0.050 | U | 0.050 | < 0.051 | 0.051 | U | 0.051 | < 0.050 | 0.050 | U | 0.050 | < 0.050 | 0.050 | U | 0.050 |
| PCB-1248 | 12672-29-6 | 0.09 | 0.09 | < 0.050 | 0.050 | U | 0.050 | < 0.050 | 0.050 | U | 0.050 | < 0.050 | 0.050 | U | 0.050 | < 0.051 | 0.051 | U | 0.051 | < 0.050 | 0.050 | U | 0.050 | < 0.050 | 0.050 | U | 0.050 |
| PCB-1254 | 11097-69-1 | 0.09 | 0.09 | < 0.050 | 0.050 | U | 0.050 | < 0.050 | 0.050 | U | 0.050 | < 0.050 | 0.050 | U | 0.050 | < 0.051 | 0.051 | U | 0.051 | < 0.050 | 0.050 | U | 0.050 | < 0.050 | 0.050 | U | 0.050 |
| PCB-1260 | 11096-82-5 | 0.09 | 0.09 | 0.31 | 0.050 | | 0.050 | < 0.050 | 0.050 | U | 0.050 | < 0.050 | 0.050 | U | 0.050 | < 0.051 | 0.051 | U | 0.051 | < 0.050 | 0.050 | U | 0.050 | < 0.050 | 0.050 | U | 0.050 |
| PCB-1262 | 37324-23-5 | | | < 0.050 | 0.050 | U | 0.050 | < 0.050 | 0.050 | U | 0.050 | < 0.050 | 0.050 | U | 0.050 | < 0.051 | 0.051 | U | 0.051 | < 0.050 | 0.050 | U | 0.050 | < 0.050 | 0.050 | U | 0.050 |
| PCB-1268 | 11100-14-4 | | | < 0.050 | 0.050 | U | 0.050 | < 0.050 | 0.050 | U | 0.050 | < 0.050 | 0.050 | U | 0.050 | < 0.051 | 0.051 | U | 0.051 | < 0.050 | 0.050 | U | 0.050 | < 0.050 | 0.050 | U | 0.050 |

Qualifiers

| | |
|---|---|
| U | The compound was anlayzed for but not detected at or above the MDL. The number immediately preceding the "U" represents the PQL reporting level corrected for percent solids, weight and/or volume calculations, and dilution factors. |
| J | The value is estimated. This flag is used a) on form 1 when the compound is reported above the MDL, but below the PQL, and b) on the Tentatively Identified Compounds (TIC) form for all compounds identified. |
| N | The concentration is based on the response fo the nearest internal. This flag is used on the TIC form for all compounds identified. |
| S | This compound is a solvent that is used in the laboratory. Laboratory contamination is suspected if concentration is less than five times the reporting level. |
| D | The reported concentration is the result of a diluted analysis. |
| (*) | See report for comment. |

Result Detected

RL Exceeds Criteria

Result Exceeds Criteria

1. Samples were obtained by HydroEnvironmental Solutions, Inc. of Somers, NY on May 21 and 22, 2015 and analyzed by Phoenix Environmental Laboratories, Inc. of Manchester, CT.
2. Phoenix Environmental reveiwed the analytical data and compared the analytical Reporting Limits to the NYSDEC ????????
3. Any Regulatory Excdeedances were color coded.
4. Sample MW-104 is a blind duplicate of sample MW-4 for QA/QC purposes.
5. Where analytical standards are blank, no standard has yet been established.

**TABLE 3B**
**GROUNDWATER LABORATORY ANALYTICAL RESULTS SUMMARY**

**REMEDIAL INVESTIGATION**
**109-125 MARBLEDALE ROAD**
**TUCKAHOE, NEW YORK**
**BCP #C360143**

| Analyte | Lab Sample Id<br>Collection Date<br>Client Id<br>Matrix | | | BJ20806<br>5/21/2015<br>MW-6<br>Ground Water | | | | BJ21612<br>5/22/2015<br>MW-7<br>Ground Water | | | | BJ20807<br>5/21/2015<br>MW-8<br>Ground Water | | | | BJ20808<br>5/21/2015<br>MW-9<br>Ground Water | | | | BJ20809<br>5/21/2015<br>FIELD BLANK<br>Ground Water | | | | BJ20810<br>5/21/2015<br>TRIP BLANK<br>Ground Water | | | |
|---|---|---|---|---|---|---|---|---|---|---|---|---|---|---|---|---|---|---|---|---|---|---|---|---|---|---|---|
| | CAS | TAGM-GW | TOGS-WQ/GA | Result | RL | Qual | MDL | Result | RL | Qual | MDL | Result | RL | Qual | MDL | Result | RL | Qual | MDL | Result | RL | Qual | MDL | Result | RL | Qual | MDL |
| Volatiles By SW8260C (ug/L) | | | | | | | | | | | | | | | | | | | | | | | | | | | |
| 1,1,1-Trichloroethane | 71-55-6 | 5 | 5 | < 4.0 | 4.0 | U | 0.50 | < 10 | 10 | U | 1.3 | < 2.0 | 2.0 | U | 0.25 | < 2.0 | 2.0 | U | 0.25 | < 2.0 | 2.0 | U | 0.25 | < 2.0 | 2.0 | U | 0.25 |
| 1,1,2,2-Tetrachloroethane | 79-34-5 | 5 | 5 | < 2.0 | 2.0 | U | 0.50 | < 5.0 | 5.0 | U | 1.3 | < 1.0 | 1.0 | U | 0.25 | < 1.0 | 1.0 | U | 0.25 | < 1.0 | 1.0 | U | 0.25 | < 1.0 | 1.0 | U | 0.25 |
| 1,1,2-Trichloroethane | 79-00-5 | | 1 | < 1 | 1 | U | 0.50 | < 10 | 10 | U | 1.3 | < 1 | 1 | U | 0.25 | < 1 | 1 | U | 0.25 | < 1 | 1 | U | 0.25 | < 1 | 1 | U | 0.25 |
| 1,1-Dichloroethane | 75-34-3 | 5 | 5 | < 4.0 | 4.0 | U | 0.50 | < 10 | 10 | U | 1.3 | < 2.0 | 2.0 | U | 0.25 | < 2.0 | 2.0 | U | 0.25 | < 2.0 | 2.0 | U | 0.25 | < 2.0 | 2.0 | U | 0.25 |
| 1,1-Dichloroethene | 75-35-4 | 5 | 5 | < 2.0 | 2.0 | U | 0.50 | < 5.0 | 5.0 | U | 1.3 | 0.37 | 1.0 | J | 0.25 | < 1.0 | 1.0 | U | 0.25 | < 1.0 | 1.0 | U | 0.25 | < 1.0 | 1.0 | U | 0.25 |
| 1,2,3-Trichlorobenzene | 87-61-6 | | | < 2.0 | 2.0 | U | 0.50 | < 5.0 | 5.0 | U | 1.3 | < 1.0 | 1.0 | U | 0.25 | < 1.0 | 1.0 | U | 0.25 | < 1.0 | 1.0 | U | 0.25 | < 1.0 | 1.0 | U | 0.25 |
| 1,2,4-Trichlorobenzene | 120-82-1 | | | < 2.0 | 2.0 | U | 0.50 | < 5.0 | 5.0 | U | 1.3 | < 1.0 | 1.0 | U | 0.25 | < 1.0 | 1.0 | U | 0.25 | < 1.0 | 1.0 | U | 0.25 | < 1.0 | 1.0 | U | 0.25 |
| 1,2-Dibromo-3-chloropropane | 96-12-8 | | 0.04 | < 1 | 1 | U | 1.0 | < 5.0 | 5.0 | U | 2.5 | < 1.0 | 1.0 | U | 0.50 | < 1.0 | 1.0 | U | 0.50 | < 1.0 | 1.0 | U | 0.50 | < 1.0 | 1.0 | U | 0.50 |
| 1,2-Dibromoethane | 106-93-4 | | 0.0006 | < 1 | 1 | U | 0.50 | < 5.0 | 5.0 | U | 1.3 | < 1.0 | 1.0 | U | 0.25 | < 1.0 | 1.0 | U | 0.25 | < 1.0 | 1.0 | U | 0.25 | < 1.0 | 1.0 | U | 0.25 |
| 1,2-Dichlorobenzene | 95-50-1 | 4.7 | | < 4.0 | 4.0 | U | 0.50 | < 10 | 10 | U | 1.3 | < 2.0 | 2.0 | U | 0.25 | < 2.0 | 2.0 | U | 0.25 | < 2.0 | 2.0 | U | 0.25 | < 2.0 | 2.0 | U | 0.25 |
| 1,2-Dichloroethane | 107-06-2 | 5 | 0.6 | < 0.6 | 0.6 | U | 0.50 | < 5.0 | 5.0 | U | 1.3 | < 0.6 | 0.6 | U | 0.25 | < 0.6 | 0.6 | U | 0.25 | < 0.6 | 0.6 | U | 0.25 | < 0.6 | 0.6 | U | 0.25 |
| 1,2-Dichloropropane | 78-87-5 | | 1 | < 1 | 1 | U | 0.50 | < 5.0 | 5.0 | U | 1.3 | < 1.0 | 1.0 | U | 0.25 | < 1.0 | 1.0 | U | 0.25 | < 1.0 | 1.0 | U | 0.25 | < 1.0 | 1.0 | U | 0.25 |
| 1,3-Dichlorobenzene | 541-73-1 | 5 | 3 | < 2.0 | 2.0 | U | 0.50 | < 10 | 10 | U | 1.3 | < 2.0 | 2.0 | U | 0.25 | < 2.0 | 2.0 | U | 0.25 | < 2.0 | 2.0 | U | 0.25 | < 2.0 | 2.0 | U | 0.25 |
| 1,4-Dichlorobenzene | 106-46-7 | 5 | | < 4.0 | 4.0 | U | 0.50 | < 10 | 10 | U | 1.3 | < 2.0 | 2.0 | U | 0.25 | < 2.0 | 2.0 | U | 0.25 | < 2.0 | 2.0 | U | 0.25 | < 2.0 | 2.0 | U | 0.25 |
| 2-Hexanone | 591-78-6 | | 50 | < 5.0 | 5.0 | U | 5.0 | < 13 | 13 | U | 13 | < 2.5 | 2.5 | U | 2.5 | < 2.5 | 2.5 | U | 2.5 | < 2.5 | 2.5 | U | 2.5 | < 2.5 | 2.5 | U | 2.5 |
| 4-Methyl-2-pentanone | 108-10-1 | 50 | | < 5.0 | 5.0 | U | 5.0 | < 13 | 13 | U | 13 | < 2.5 | 2.5 | U | 2.5 | < 2.5 | 2.5 | U | 2.5 | < 2.5 | 2.5 | U | 2.5 | < 2.5 | 2.5 | U | 2.5 |
| Acetone | 67-64-1 | 50 | 50 | 8.4 | 10 | JS | 5.0 | 27 | 25 | S | 13 | < 5.0 | 5.0 | U | 2.5 | 15 | 5.0 | S | 2.5 | < 5.0 | 5.0 | U | 2.5 | < 5.0 | 5.0 | U | 2.5 |
| Benzene | 71-43-2 | 0.7 | 1 | < 0.7 | 0.7 | U | 0.50 | < 3.5 | 3.5 | U | 1.3 | < 0.70 | 0.70 | U | 0.25 | 1.1 | 0.70 | | 0.25 | < 0.70 | 0.70 | U | 0.25 | < 0.70 | 0.70 | U | 0.25 |
| Bromochloromethane | 74-97-5 | | 5 | < 2.0 | 2.0 | U | 0.50 | < 5.0 | 5.0 | U | 1.3 | < 1.0 | 1.0 | U | 0.25 | < 1.0 | 1.0 | U | 0.25 | < 1.0 | 1.0 | U | 0.25 | < 1.0 | 1.0 | U | 0.25 |
| Bromodichloromethane | 75-27-4 | | 50 | < 2.0 | 2.0 | U | 0.50 | < 5.0 | 5.0 | U | 1.3 | < 1.0 | 1.0 | U | 0.25 | < 1.0 | 1.0 | U | 0.25 | < 1.0 | 1.0 | U | 0.25 | < 1.0 | 1.0 | U | 0.25 |
| Bromoform | 75-25-2 | | 50 | < 2.0 | 2.0 | U | 0.50 | < 5.0 | 5.0 | U | 1.3 | < 1.0 | 1.0 | U | 0.25 | < 1.0 | 1.0 | U | 0.25 | < 1.0 | 1.0 | U | 0.25 | < 1.0 | 1.0 | U | 0.25 |
| Bromomethane | 74-83-9 | | 5 | < 4.0 | 4.0 | U | 0.50 | < 10 | 10 | U | 1.3 | < 2.0 | 2.0 | U | 0.25 | < 2.0 | 2.0 | U | 0.25 | < 2.0 | 2.0 | U | 0.25 | < 2.0 | 2.0 | U | 0.25 |
| Carbon Disulfide | 75-15-0 | 50 | | < 2.0 | 2.0 | U | 0.50 | < 5.0 | 5.0 | U | 1.3 | < 1.0 | 1.0 | U | 0.25 | < 1.0 | 1.0 | U | 0.25 | < 1.0 | 1.0 | U | 0.25 | < 1.0 | 1.0 | U | 0.25 |
| Carbon tetrachloride | 56-23-5 | 5 | 5 | < 2.0 | 2.0 | U | 0.50 | < 5.0 | 5.0 | U | 1.3 | < 1.0 | 1.0 | U | 0.25 | < 1.0 | 1.0 | U | 0.25 | < 1.0 | 1.0 | U | 0.25 | < 1.0 | 1.0 | U | 0.25 |
| Chlorobenzene | 108-90-7 | 5 | 5 | < 4.0 | 4.0 | U | 0.50 | < 10 | 10 | U | 1.3 | < 2.0 | 2.0 | U | 0.25 | < 2.0 | 2.0 | U | 0.25 | < 2.0 | 2.0 | U | 0.25 | < 2.0 | 2.0 | U | 0.25 |
| Chloroethane | 75-00-3 | 50 | 5 | < 4.0 | 4.0 | U | 0.50 | < 10 | 10 | U | 1.3 | < 2.0 | 2.0 | U | 0.25 | < 2.0 | 2.0 | U | 0.25 | < 2.0 | 2.0 | U | 0.25 | < 2.0 | 2.0 | U | 0.25 |
| Chloroform | 67-66-3 | 7 | 7 | < 4.0 | 4.0 | U | 0.50 | < 10 | 10 | U | 1.3 | 5.5 | 2.0 | | 0.25 | < 2.0 | 2.0 | U | 0.25 | < 2.0 | 2.0 | U | 0.25 | < 2.0 | 2.0 | U | 0.25 |
| Chloromethane | 74-87-3 | | 5 | < 4.0 | 4.0 | U | 0.50 | < 10 | 10 | U | 1.3 | < 2.0 | 2.0 | U | 0.25 | < 2.0 | 2.0 | U | 0.25 | < 2.0 | 2.0 | U | 0.25 | < 2.0 | 2.0 | U | 0.25 |
| cis-1,2-Dichloroethene | 156-59-2 | | 5 | < 2.0 | 2.0 | U | 0.50 | < 5.0 | 5.0 | U | 1.3 | 2.8 | 1.0 | | 0.25 | < 1.0 | 1.0 | U | 0.25 | < 1.0 | 1.0 | U | 0.25 | < 1.0 | 1.0 | U | 0.25 |
| cis-1,3-Dichloropropene | 10061-01-5 | | 0.4 | < 0.5 | 0.5 | U | 0.50 | < 2.0 | 2.0 | U | 1.3 | < 0.40 | 0.40 | U | 0.25 | < 0.40 | 0.40 | U | 0.25 | < 0.40 | 0.40 | U | 0.25 | < 0.40 | 0.40 | U | 0.25 |
| Cyclohexane | 110-82-7 | | | < 10 | 10 | U | 1.0 | < 25 | 25 | U | 2.5 | < 5.0 | 5.0 | U | 0.50 | < 5.0 | 5.0 | U | 0.50 | < 5.0 | 5.0 | U | 0.50 | < 5.0 | 5.0 | U | 0.50 |
| Dibromochloromethane | 124-48-1 | 50 | 50 | < 2.0 | 2.0 | U | 0.50 | < 5.0 | 5.0 | U | 1.3 | < 1.0 | 1.0 | U | 0.25 | < 1.0 | 1.0 | U | 0.25 | < 1.0 | 1.0 | U | 0.25 | < 1.0 | 1.0 | U | 0.25 |
| Dichlorodifluoromethane | 75-71-8 | | 5 | < 2.0 | 2.0 | U | 0.50 | 14 | 5.0 | | 1.3 | < 1.0 | 1.0 | U | 0.25 | 0.92 | 1.0 | J | 0.25 | < 1.0 | 1.0 | U | 0.25 | < 1.0 | 1.0 | U | 0.25 |
| Ethylbenzene | 100-41-4 | 5 | 5 | < 2.0 | 2.0 | U | 0.50 | < 5.0 | 5.0 | U | 1.3 | < 1.0 | 1.0 | U | 0.25 | < 1.0 | 1.0 | U | 0.25 | < 1.0 | 1.0 | U | 0.25 | < 1.0 | 1.0 | U | 0.25 |
| Isopropylbenzene | 98-82-8 | | 5 | < 2.0 | 2.0 | U | 0.50 | < 5.0 | 5.0 | U | 1.3 | < 1.0 | 1.0 | U | 0.25 | < 1.0 | 1.0 | U | 0.25 | < 1.0 | 1.0 | U | 0.25 | < 1.0 | 1.0 | U | 0.25 |
| m&p-Xylene | 179601-23-1 | | | < 2.0 | 2.0 | U | 0.50 | < 5.0 | 5.0 | U | 1.3 | < 1.0 | 1.0 | U | 0.25 | 0.42 | 1.0 | J | 0.25 | < 1.0 | 1.0 | U | 0.25 | < 1.0 | 1.0 | U | 0.25 |
| Methyl ethyl ketone | 78-93-3 | 50 | 50 | < 10 | 10 | U | 5.0 | < 25 | 25 | U | 13 | < 5.0 | 5.0 | U | 2.5 | 3.2 | 5.0 | J | 2.5 | < 5.0 | 5.0 | U | 2.5 | < 5.0 | 5.0 | U | 2.5 |
| Methyl t-butyl ether (MTBE) | 1634-04-4 | | | 6.1 | 2.0 | | 0.50 | < 5.0 | 5.0 | U | 1.3 | < 1.0 | 1.0 | U | 0.25 | < 1.0 | 1.0 | U | 0.25 | < 1.0 | 1.0 | U | 0.25 | < 1.0 | 1.0 | U | 0.25 |
| Methylacetate | 79-20-9 | | | < 5.0 | 5.0 | U | 5.0 | < 13 | 13 | U | 13 | < 2.5 | 2.5 | U | 2.5 | < 2.5 | 2.5 | U | 2.5 | < 2.5 | 2.5 | U | 2.5 | < 2.5 | 2.5 | U | 2.5 |
| Methylcyclohexane | 108-87-2 | | | < 4.0 | 4.0 | U | 1.0 | < 10 | 10 | U | 2.5 | < 2.0 | 2.0 | U | 0.50 | < 2.0 | 2.0 | U | 0.50 | < 2.0 | 2.0 | U | 0.50 | < 2.0 | 2.0 | U | 0.50 |
| Methylene chloride | 75-09-2 | 5 | 5 | < 5 | 5 | U | 2.0 | < 15 | 15 | U | 5.0 | < 3.0 | 3.0 | U | 1.0 | < 3.0 | 3.0 | U | 1.0 | < 3.0 | 3.0 | U | 1.0 | < 3.0 | 3.0 | U | 1.0 |
| o-Xylene | 95-47-6 | 5 | 5 | < 2.0 | 2.0 | U | 0.50 | < 5.0 | 5.0 | U | 1.3 | < 1.0 | 1.0 | U | 0.25 | 0.33 | 1.0 | J | 0.25 | < 1.0 | 1.0 | U | 0.25 | < 1.0 | 1.0 | U | 0.25 |
| Styrene | 100-42-5 | | 5 | < 2.0 | 2.0 | U | 0.50 | < 5.0 | 5.0 | U | 1.3 | < 1.0 | 1.0 | U | 0.25 | < 1.0 | 1.0 | U | 0.25 | < 1.0 | 1.0 | U | 0.25 | < 1.0 | 1.0 | U | 0.25 |
| Tetrachloroethene | 127-18-4 | 5 | 5 | < 2.0 | 2.0 | U | 0.50 | < 5.0 | 5.0 | U | 1.3 | 480 | 20 | | 5.0 | 8.1 | 1.0 | | 0.25 | < 1.0 | 1.0 | U | 0.25 | < 1.0 | 1.0 | U | 0.25 |
| Toluene | 108-88-3 | 5 | 5 | < 4.0 | 4.0 | U | 0.50 | < 10 | 10 | U | 1.3 | < 2.0 | 2.0 | U | 0.25 | 0.84 | 2.0 | J | 0.25 | < 2.0 | 2.0 | U | 0.25 | < 2.0 | 2.0 | U | 0.25 |
| Total Xylenes | 1330-20-7 | 5 | 5 | < 1.7 | 1.7 | U | 0.50 | < 4.4 | 4.4 | U | 1.3 | < 0.87 | 0.87 | U | 0.25 | < 0.87 | 0.87 | U | 0.25 | < 0.87 | 0.87 | U | 0.25 | < 0.87 | 0.87 | U | 0.25 |
| trans-1,2-Dichloroethene | 156-60-5 | 5 | 5 | < 4.0 | 4.0 | U | 0.50 | < 10 | 10 | U | 1.3 | < 2.0 | 2.0 | U | 0.25 | < 2.0 | 2.0 | U | 0.25 | < 2.0 | 2.0 | U | 0.25 | < 2.0 | 2.0 | U | 0.25 |
| trans-1,3-Dichloropropene | 10061-02-6 | | 0.4 | < 0.5 | 0.5 | U | 0.50 | < 2.0 | 2.0 | U | 1.3 | < 0.40 | 0.40 | U | 0.25 | < 0.40 | 0.40 | U | 0.25 | < 0.40 | 0.40 | U | 0.25 | < 0.40 | 0.40 | U | 0.25 |
| Trichloroethene | 79-01-6 | 5 | 5 | < 2.0 | 2.0 | U | 0.50 | < 5.0 | 5.0 | U | 1.3 | 47 | 20 | | 5.0 | < 1.0 | 1.0 | U | 0.50 | < 1.0 | 1.0 | U | 0.25 | < 1.0 | 1.0 | U | 0.25 |
| Trichlorofluoromethane | 75-69-4 | | 5 | < 2.0 | 2.0 | U | 0.50 | < 5.0 | 5.0 | U | 1.3 | < 1.0 | 1.0 | U | 0.25 | < 1.0 | 1.0 | U | 0.25 | < 1.0 | 1.0 | U | 0.25 | < 1.0 | 1.0 | U | 0.25 |
| Trichlorotrifluoroethane | 76-13-1 | 5 | 5 | < 2.0 | 2.0 | U | 0.50 | < 5.0 | 5.0 | U | 1.3 | < 1.0 | 1.0 | U | 0.25 | < 1.0 | 1.0 | U | 0.25 | < 1.0 | 1.0 | U | 0.25 | < 1.0 | 1.0 | U | 0.25 |

**TABLE 3B**
**GROUNDWATER LABORATORY ANALYTICAL RESULTS SUMMARY**

**REMEDIAL INVESTIGATION**
**109-125 MARBLEDALE ROAD**
**TUCKAHOE, NEW YORK**
**BCP #C360143**

| Analyte | Lab Sample Id<br>Collection Date<br>Client Id<br>Matrix | | | BJ20806<br>5/21/2015<br>MW-6<br>Ground Water | | | | BJ21612<br>5/22/2015<br>MW-7<br>Ground Water | | | | BJ20807<br>5/21/2015<br>MW-8<br>Ground Water | | | | BJ20808<br>5/21/2015<br>MW-9<br>Ground Water | | | | BJ20809<br>5/21/2015<br>FIELD BLANK<br>Ground Water | | | | BJ20810<br>5/21/2015<br>TRIP BLANK<br>Ground Water | | | |
|---|---|---|---|---|---|---|---|---|---|---|---|---|---|---|---|---|---|---|---|---|---|---|---|---|---|---|---|
| | CAS | TAGM-GW | TOGS-WQ/GA | Result | RL | Qual | MDL | Result | RL | Qual | MDL | Result | RL | Qual | MDL | Result | RL | Qual | MDL | Result | RL | Qual | MDL | Result | RL | Qual | MDL |
| Vinyl chloride | 75-01-4 | 2 | 2 | < 2.0 | 2.0 | U | 0.50 | < 5.0 | 5.0 | U | 1.3 | < 1.0 | 1.0 | U | 0.25 | < 1.0 | 1.0 | U | 0.25 | < 1.0 | 1.0 | U | 0.25 | < 1.0 | 1.0 | U | 0.25 |
| **1,4-dioxane By SW8260C (ug/L)** | | | | | | | | | | | | | | | | | | | | | | | | | | | |
| 1,4-dioxane | 123-91-1 | | | < 200 | 200 | U | 100 | < 500 | 500 | U | 250 | < 100 | 100 | U | 50 | < 100 | 100 | U | 50 | < 100 | 100 | U | 50 | < 100 | 100 | U | 50 |
| **Semivolatiles By SW8270D (SIM) (ug/L)** | | | | | | | | | | | | | | | | | | | | | | | | | | | |
| 1,1-Biphenyl | 92-52-4 | | 5 | < 0.50 | 0.50 | U | 0.50 | < 0.51 | 0.51 | U | 0.51 | < 0.50 | 0.50 | U | 0.50 | < 0.50 | 0.50 | U | 0.50 | < 0.50 | 0.50 | U | 0.50 | | | | |
| 1,2,4,5-Tetrachlorobenzene | 95-94-3 | | | < 0.50 | 0.50 | U | 0.50 | < 0.51 | 0.51 | U | 0.51 | < 0.50 | 0.50 | U | 0.50 | < 0.50 | 0.50 | U | 0.50 | < 0.50 | 0.50 | U | 0.50 | | | | |
| 2,3,4,6-tetrachlorophenol | 58-90-2 | | 1 | < 0.20 | 0.20 | U | 0.20 | < 0.21 | 0.21 | U | 0.21 | < 0.20 | 0.20 | U | 0.20 | < 0.20 | 0.20 | U | 0.20 | < 0.20 | 0.20 | U | 0.20 | | | | |
| 2,4,5-Trichlorophenol | 95-95-4 | 1 | 1 | < 0.20 | 0.20 | U | 0.20 | 0.26 | 0.21 | | 0.21 | < 0.20 | 0.20 | U | 0.20 | < 0.20 | 0.20 | U | 0.20 | < 0.20 | 0.20 | U | 0.20 | | | | |
| 2,4,6-Trichlorophenol | 88-06-2 | | 1 | < 0.20 | 0.20 | U | 0.20 | < 0.21 | 0.21 | U | 0.21 | < 0.20 | 0.20 | U | 0.20 | < 0.20 | 0.20 | U | 0.20 | < 0.20 | 0.20 | U | 0.20 | | | | |
| 2,4-Dichlorophenol | 120-83-2 | 1 | 5 | < 0.20 | 0.20 | U | 0.20 | < 0.21 | 0.21 | U | 0.21 | < 0.20 | 0.20 | U | 0.20 | < 0.20 | 0.20 | U | 0.20 | < 0.20 | 0.20 | U | 0.20 | | | | |
| 2,4-Dimethylphenol | 105-67-9 | | 1 | < 0.20 | 0.20 | U | 0.20 | < 0.21 | 0.21 | U | 0.21 | < 0.20 | 0.20 | U | 0.20 | 1.4 | 0.20 | | 0.20 | < 0.20 | 0.20 | U | 0.20 | | | | |
| 2-Chlorophenol | 95-57-8 | 50 | 1 | < 0.20 | 0.20 | U | 0.20 | < 0.21 | 0.21 | U | 0.21 | < 0.20 | 0.20 | U | 0.20 | < 0.20 | 0.20 | U | 0.20 | < 0.20 | 0.20 | U | 0.20 | | | | |
| 2-Methylphenol (o-cresol) | 95-48-7 | 5 | 1 | < 0.20 | 0.20 | U | 0.20 | < 0.21 | 0.21 | U | 0.21 | < 0.20 | 0.20 | U | 0.20 | 0.57 | 0.20 | | 0.20 | < 0.20 | 0.20 | U | 0.20 | | | | |
| 2-Nitrophenol | 88-75-5 | 5 | 1 | < 0.20 | 0.20 | U | 0.20 | < 0.21 | 0.21 | U | 0.21 | < 0.20 | 0.20 | U | 0.20 | < 0.20 | 0.20 | U | 0.20 | < 0.20 | 0.20 | U | 0.20 | | | | |
| 4-Chloro-3-methylphenol | 59-50-7 | 5 | 1 | < 0.20 | 0.20 | U | 0.20 | < 0.21 | 0.21 | U | 0.21 | < 0.20 | 0.20 | U | 0.20 | < 0.20 | 0.20 | U | 0.20 | < 0.20 | 0.20 | U | 0.20 | | | | |
| 4-Nitrophenol | 100-02-7 | 5 | 1 | < 0.20 | 0.20 | U | 0.20 | < 0.21 | 0.21 | U | 0.21 | < 0.20 | 0.20 | U | 0.20 | < 0.20 | 0.20 | U | 0.20 | < 0.20 | 0.20 | U | 0.20 | | | | |
| Acenaphthylene | 208-96-8 | 20 | | < 0.30 | 0.30 | U | 0.30 | < 0.31 | 0.31 | U | 0.31 | < 0.30 | 0.30 | U | 0.30 | < 0.30 | 0.30 | U | 0.30 | < 0.30 | 0.30 | U | 0.30 | | | | |
| Anthracene | 120-12-7 | 50 | 50 | < 0.20 | 0.20 | U | 0.20 | < 0.21 | 0.21 | U | 0.21 | < 0.20 | 0.20 | U | 0.20 | 0.8 | 0.20 | | 0.20 | < 0.20 | 0.20 | U | 0.20 | | | | |
| Atrazine | 1912-24-9 | | 7.5 | < 0.50 | 0.50 | U | 0.50 | < 0.51 | 0.51 | U | 0.51 | < 0.50 | 0.50 | U | 0.50 | < 0.50 | 0.50 | U | 0.50 | < 0.50 | 0.50 | U | 0.50 | | | | |
| Benz(a)anthracene | 56-55-3 | 0.002 | 0.002 | 0.16 | 0.02 | | 0.02 | 0.05 | 0.02 | | 0.02 | 0.02 | 0.02 | | 0.02 | 0.68 | 0.02 | | 0.02 | < 0.02 | 0.02 | U | 0.02 | | | | |
| Benzo(a)pyrene | 50-32-8 | 0.002 | | 0.11 | 0.02 | | 0.02 | 0.05 | 0.02 | | 0.02 | < 0.02 | 0.02 | U | 0.02 | 0.63 | 0.02 | | 0.02 | < 0.02 | 0.02 | U | 0.02 | | | | |
| Benzo(b)fluoranthene | 205-99-2 | 0.002 | 0.002 | 0.17 | 0.02 | | 0.02 | 0.06 | 0.02 | | 0.02 | < 0.02 | 0.02 | U | 0.02 | 0.88 | 0.02 | | 0.02 | < 0.02 | 0.02 | U | 0.02 | | | | |
| Benzo(ghi)perylene | 191-24-2 | 5 | | < 0.20 | 0.20 | U | 0.20 | < 0.21 | 0.21 | U | 0.21 | < 0.20 | 0.20 | U | 0.20 | < 0.20 | 0.20 | U | 0.20 | < 0.20 | 0.20 | U | 0.20 | | | | |
| Benzo(k)fluoranthene | 207-08-9 | 0.002 | 0.002 | 0.06 | 0.02 | | 0.02 | 0.03 | 0.02 | | 0.02 | < 0.02 | 0.02 | U | 0.02 | 0.37 | 0.02 | | 0.02 | < 0.02 | 0.02 | U | 0.02 | | | | |
| Bis(2-chloroethyl)ether | 111-44-4 | | 1 | < 0.20 | 0.20 | U | 0.20 | < 0.21 | 0.21 | U | 0.21 | < 0.20 | 0.20 | U | 0.20 | < 0.20 | 0.20 | U | 0.20 | < 0.20 | 0.20 | U | 0.20 | | | | |
| Bis(2-ethylhexyl)phthalate | 117-81-7 | 50 | 5 | 0.57 | 0.30 | | 0.30 | 0.64 | 0.31 | | 0.31 | 0.71 | 0.30 | | 0.30 | 0.8 | 0.30 | | 0.30 | < 0.30 | 0.30 | U | 0.30 | | | | |
| Chrysene | 218-01-9 | 0.002 | 0.002 | 0.17 | 0.02 | | 0.02 | 0.05 | 0.02 | | 0.02 | < 0.02 | 0.02 | U | 0.02 | 0.64 | 0.02 | | 0.02 | < 0.02 | 0.02 | U | 0.02 | | | | |
| Dibenz(a,h)anthracene | 53-70-3 | 50 | | < 0.02 | 0.02 | U | 0.02 | < 0.02 | 0.02 | U | 0.02 | < 0.02 | 0.02 | U | 0.02 | < 0.02 | 0.02 | U | 0.02 | < 0.02 | 0.02 | U | 0.02 | | | | |
| Fluoranthene | 206-44-0 | 50 | 50 | 0.66 | 0.20 | | 0.20 | < 0.21 | 0.21 | U | 0.21 | < 0.20 | 0.20 | U | 0.20 | 2.1 | 0.20 | | 0.20 | < 0.20 | 0.20 | U | 0.20 | | | | |
| Fluorene | 86-73-7 | 50 | 50 | 0.87 | 0.20 | | 0.20 | < 0.21 | 0.21 | U | 0.21 | < 0.20 | 0.20 | U | 0.20 | 1.8 | 0.20 | | 0.20 | < 0.20 | 0.20 | U | 0.20 | | | | |
| Hexachlorobenzene | 118-74-1 | 0.35 | 0.04 | < 0.02 | 0.02 | U | 0.02 | < 0.02 | 0.02 | U | 0.02 | < 0.02 | 0.02 | U | 0.02 | < 0.02 | 0.02 | U | 0.02 | < 0.02 | 0.02 | U | 0.02 | | | | |
| Hexachlorobutadiene | 87-68-3 | | 0.5 | < 0.20 | 0.20 | U | 0.20 | < 0.21 | 0.21 | U | 0.21 | < 0.20 | 0.20 | U | 0.20 | < 0.20 | 0.20 | U | 0.20 | < 0.20 | 0.20 | U | 0.20 | | | | |
| Hexachloroethane | 67-72-1 | | 5 | < 0.20 | 0.20 | U | 0.20 | < 0.21 | 0.21 | U | 0.21 | < 0.20 | 0.20 | U | 0.20 | < 0.20 | 0.20 | U | 0.20 | < 0.20 | 0.20 | U | 0.20 | | | | |
| Indeno(1,2,3-cd)pyrene | 193-39-5 | 0.002 | 0.002 | 0.07 | 0.02 | | 0.02 | < 0.02 | 0.02 | U | 0.02 | < 0.02 | 0.02 | U | 0.02 | 0.36 | 0.02 | | 0.02 | < 0.02 | 0.02 | U | 0.02 | | | | |
| Nitrobenzene | 98-95-3 | 5 | 0.4 | < 0.20 | 0.20 | U | 0.20 | < 0.21 | 0.21 | U | 0.21 | < 0.20 | 0.20 | U | 0.20 | < 0.20 | 0.20 | U | 0.20 | < 0.20 | 0.20 | U | 0.20 | | | | |
| N-Nitrosodimethylamine | 62-75-9 | | | < 0.20 | 0.20 | U | 0.20 | < 0.21 | 0.21 | U | 0.21 | < 0.20 | 0.20 | U | 0.20 | < 0.20 | 0.20 | U | 0.20 | < 0.20 | 0.20 | U | 0.20 | | | | |
| Pentachlorophenol | 87-86-5 | 1 | 1 | < 0.20 | 0.20 | U | 0.20 | 0.91 | 0.21 | | 0.21 | < 0.20 | 0.20 | U | 0.20 | < 0.20 | 0.20 | U | 0.20 | < 0.20 | 0.20 | U | 0.20 | | | | |
| Phenanthrene | 85-01-8 | 50 | 50 | 1.5 | 0.05 | | 0.05 | 0.12 | 0.05 | | 0.05 | < 0.05 | 0.05 | U | 0.05 | 3.5 | 0.05 | | 0.05 | < 0.05 | 0.05 | U | 0.05 | | | | |
| Phenol | 108-95-2 | 1 | 1 | < 0.20 | 0.20 | U | 0.20 | 3 | 0.21 | | 0.21 | < 0.20 | 0.20 | U | 0.20 | 100 | 25 | | 4.5 | < 0.20 | 0.20 | U | 0.20 | | | | |
| Pyrene | 129-00-0 | 50 | 50 | 0.51 | 0.20 | | 0.20 | < 0.21 | 0.21 | U | 0.21 | < 0.20 | 0.20 | U | 0.20 | 1.7 | 0.20 | | 0.20 | < 0.20 | 0.20 | U | 0.20 | | | | |
| **Semivolatiles By SW8270D (ug/L)** | | | | | | | | | | | | | | | | | | | | | | | | | | | |
| 2,4-Dinitrophenol | 51-28-5 | 5 | 5 | < 1.0 | 1.0 | U | 0.90 | < 1.0 | 1.0 | U | 0.92 | < 1.0 | 1.0 | U | 0.90 | < 1.0 | 1.0 | U | 0.90 | < 1.0 | 1.0 | U | 0.90 | | | | |
| 2,4-Dinitrotoluene | 121-14-2 | | 5 | < 5.0 | 5.0 | U | 2.0 | < 5.0 | 5.0 | U | 2.0 | < 5.0 | 5.0 | U | 2.0 | < 5.0 | 5.0 | U | 2.0 | < 5.0 | 5.0 | U | 2.0 | | | | |
| 2,6-Dinitrotoluene | 606-20-2 | 5 | 5 | < 5.0 | 5.0 | U | 1.6 | < 5.0 | 5.0 | U | 1.6 | < 5.0 | 5.0 | U | 1.6 | < 5.0 | 5.0 | U | 1.6 | < 5.0 | 5.0 | U | 1.6 | | | | |
| 2-Chloronaphthalene | 91-58-7 | | 10 | < 5.0 | 5.0 | U | 1.4 | < 5.1 | 5.1 | U | 1.5 | < 5.0 | 5.0 | U | 1.4 | < 5.0 | 5.0 | U | 1.4 | < 5.0 | 5.0 | U | 1.4 | | | | |
| 2-Methylnaphthalene | 91-57-6 | 50 | | 1.5 | 5.0 | J | 1.5 | < 5.1 | 5.1 | U | 1.5 | < 5.0 | 5.0 | U | 1.5 | 1.7 | 5.0 | J | 1.5 | < 5.0 | 5.0 | U | 1.5 | | | | |
| 2-Nitroaniline | 88-74-4 | 5 | 5 | < 5.0 | 5.0 | U | 5.0 | < 5.0 | 5.0 | U | 5.1 | < 5.0 | 5.0 | U | 5.0 | < 5.0 | 5.0 | U | 5.0 | < 5.0 | 5.0 | U | 5.0 | | | | |
| 3&4-Methylphenol (m&p-cresol) | PHNX - M&P CRESOL | | | 3.6 | 5.0 | J | 0.90 | 33 | 1.0 | | 0.92 | < 5.0 | 5.0 | U | 0.90 | 5.1 | 5.0 | | 0.90 | < 1.0 | 1.0 | U | 0.90 | | | | |
| 3,3'-Dichlorobenzidine | 91-94-1 | | 5 | < 5.0 | 5.0 | U | 2.4 | < 5.0 | 5.0 | U | 2.4 | < 5.0 | 5.0 | U | 2.4 | < 5.0 | 5.0 | U | 2.4 | < 5.0 | 5.0 | U | 2.4 | | | | |
| 3-Nitroaniline | 99-09-2 | 5 | 5 | < 5.0 | 5.0 | U | 11 | < 5.0 | 5.0 | U | 11 | < 5.0 | 5.0 | U | 11 | < 5.0 | 5.0 | U | 11 | < 5.0 | 5.0 | U | 11 | | | | |

**TABLE 3B**
**GROUNDWATER LABORATORY ANALYTICAL RESULTS SUMMARY**

**REMEDIAL INVESTIGATION**
**109-125 MARBLEDALE ROAD**
**TUCKAHOE, NEW YORK**
**BCP #C360143**

| Analyte | Lab Sample Id / Collection Date / Client Id / Matrix | | | BJ20806 / 5/21/2015 / MW-6 / Ground Water | | | | BJ21612 / 5/22/2015 / MW-7 / Ground Water | | | | BJ20807 / 5/21/2015 / MW-8 / Ground Water | | | | BJ20808 / 5/21/2015 / MW-9 / Ground Water | | | | BJ20809 / 5/21/2015 / FIELD BLANK / Ground Water | | | | BJ20810 / 5/21/2015 / TRIP BLANK / Ground Water | | | |
|---|---|---|---|---|---|---|---|---|---|---|---|---|---|---|---|---|---|---|---|---|---|---|---|---|---|---|---|
| | CAS | TAGM-GW | TOGS-WQ/GA | Result | RL | Qual | MDL | Result | RL | Qual | MDL | Result | RL | Qual | MDL | Result | RL | Qual | MDL | Result | RL | Qual | MDL | Result | RL | Qual | MDL |
| 4,6-Dinitro-2-methylphenol | 534-52-1 | | 1 | < 1.0 | 1.0 | U | 1.0 | < 1.0 | 1.0 | U | 1 | < 1.0 | 1.0 | U | 1.0 | < 1.0 | 1.0 | U | 1.0 | < 1.0 | 1.0 | U | 1.0 | | | | |
| 4-Bromophenyl phenyl ether | 101-55-3 | | | < 5.0 | 5.0 | U | 1.5 | < 5.1 | 5.1 | U | 1.5 | < 5.0 | 5.0 | U | 1.5 | < 5.0 | 5.0 | U | 1.5 | < 5.0 | 5.0 | U | 1.5 | | | | |
| 4-Chloroaniline | 106-47-8 | 5 | 5 | < 5.0 | 5.0 | U | 2.3 | < 5.0 | 5.0 | U | 2.4 | < 5.0 | 5.0 | U | 2.3 | < 5.0 | 5.0 | U | 2.3 | < 5.0 | 5.0 | U | 2.3 | | | | |
| 4-Chlorophenyl phenyl ether | 7005-72-3 | | | < 5.0 | 5.0 | U | 1.7 | < 5.1 | 5.1 | U | 1.7 | < 5.0 | 5.0 | U | 1.7 | < 5.0 | 5.0 | U | 1.7 | < 5.0 | 5.0 | U | 1.7 | | | | |
| 4-Nitroaniline | 100-01-6 | | 5 | < 5.0 | 5.0 | U | 1.7 | < 5.0 | 5.0 | U | 1.7 | < 5.0 | 5.0 | U | 1.7 | < 5.0 | 5.0 | U | 1.7 | < 5.0 | 5.0 | U | 1.7 | | | | |
| Acenaphthene | 83-32-9 | 20 | 20 | < 5.0 | 5.0 | U | 1.5 | < 5.1 | 5.1 | U | 1.6 | < 5.0 | 5.0 | U | 1.5 | < 5.0 | 5.0 | U | 1.5 | < 5.0 | 5.0 | U | 1.5 | | | | |
| Acetophenone | 98-86-2 | | | < 5.0 | 5.0 | U | 1.6 | < 5.1 | 5.1 | U | 1.6 | < 5.0 | 5.0 | U | 1.6 | < 5.0 | 5.0 | U | 1.6 | < 5.0 | 5.0 | U | 1.6 | | | | |
| Benzaldehyde | 100-52-7 | | | < 5.0 | 5.0 | U | 1.5 | 1.8 | 5.1 | J | 1.5 | < 5.0 | 5.0 | U | 1.5 | < 5.0 | 5.0 | U | 1.5 | < 5.0 | 5.0 | U | 1.5 | | | | |
| Benzyl butyl phthalate | 85-68-7 | 50 | 50 | < 5.0 | 5.0 | U | 1.3 | < 5.1 | 5.1 | U | 1.3 | < 5.0 | 5.0 | U | 1.3 | < 5.0 | 5.0 | U | 1.3 | < 5.0 | 5.0 | U | 1.3 | | | | |
| Bis(2-chloroethoxy)methane | 111-91-1 | | 5 | < 5.0 | 5.0 | U | 1.4 | < 5.0 | 5.0 | U | 1.4 | < 5.0 | 5.0 | U | 1.4 | < 5.0 | 5.0 | U | 1.4 | < 5.0 | 5.0 | U | 1.4 | | | | |
| Bis(2-chloroisopropyl)ether | 39638-32-9 | | | < 5.0 | 5.0 | U | 1.4 | < 5.1 | 5.1 | U | 1.4 | < 5.0 | 5.0 | U | 1.4 | < 5.0 | 5.0 | U | 1.4 | < 5.0 | 5.0 | U | 1.4 | | | | |
| Caprolactam | 105-60-2 | | | < 5.0 | 5.0 | U | 8.9 | < 5.1 | 5.1 | U | 9.2 | < 5.0 | 5.0 | U | 8.9 | < 5.0 | 5.0 | U | 8.9 | < 5.0 | 5.0 | U | 8.9 | | | | |
| Carbazole | 86-74-8 | | | < 5.0 | 5.0 | U | 3.8 | < 5.1 | 5.1 | U | 3.9 | < 5.0 | 5.0 | U | 3.8 | < 5.0 | 5.0 | U | 3.8 | < 5.0 | 5.0 | U | 3.8 | | | | |
| Dibenzofuran | 132-64-9 | 5 | | < 5.0 | 5.0 | U | 1.5 | < 5.0 | 5.0 | U | 1.5 | < 5.0 | 5.0 | U | 1.5 | < 5.0 | 5.0 | U | 1.5 | < 5.0 | 5.0 | U | 1.5 | | | | |
| Diethyl phthalate | 84-66-2 | 50 | 50 | < 5.0 | 5.0 | U | 1.6 | 13 | 5.1 | | 1.6 | < 5.0 | 5.0 | U | 1.6 | < 5.0 | 5.0 | U | 1.6 | < 5.0 | 5.0 | U | 1.6 | | | | |
| Dimethylphthalate | 131-11-3 | 50 | 50 | < 5.0 | 5.0 | U | 1.6 | < 5.1 | 5.1 | U | 1.6 | < 5.0 | 5.0 | U | 1.6 | < 5.0 | 5.0 | U | 1.6 | < 5.0 | 5.0 | U | 1.6 | | | | |
| Di-n-butylphthalate | 84-74-2 | 50 | 50 | < 5.0 | 5.0 | U | 1.3 | < 5.1 | 5.1 | U | 1.4 | < 5.0 | 5.0 | U | 1.3 | < 5.0 | 5.0 | U | 1.3 | < 5.0 | 5.0 | U | 1.3 | | | | |
| Di-n-octylphthalate | 117-84-0 | 50 | 50 | < 5.0 | 5.0 | U | 1.3 | < 5.1 | 5.1 | U | 1.3 | < 5.0 | 5.0 | U | 1.3 | < 5.0 | 5.0 | U | 1.3 | < 5.0 | 5.0 | U | 1.3 | | | | |
| Hexachlorocyclopentadiene | 77-47-4 | | 5 | < 5.0 | 5.0 | U | 1.5 | < 5.0 | 5.0 | U | 1.6 | < 5.0 | 5.0 | U | 1.5 | < 5.0 | 5.0 | U | 1.5 | < 5.0 | 5.0 | U | 1.5 | | | | |
| Isophorone | 78-59-1 | 50 | 50 | < 5.0 | 5.0 | U | 1.4 | < 5.1 | 5.1 | U | 1.4 | 2.3 | 5.0 | J | 1.4 | < 5.0 | 5.0 | U | 1.4 | < 5.0 | 5.0 | U | 1.4 | | | | |
| Naphthalene | 91-20-3 | 10 | 10 | < 5.0 | 5.0 | U | 1.4 | < 5.0 | 5.0 | U | 1.5 | < 5.0 | 5.0 | U | 1.4 | 3.6 | 5.0 | J | 1.4 | < 5.0 | 5.0 | U | 1.4 | | | | |
| N-Nitrosodi-n-propylamine | 621-64-7 | | | < 5.0 | 5.0 | U | 1.6 | < 5.1 | 5.1 | U | 1.7 | < 5.0 | 5.0 | U | 1.6 | < 5.0 | 5.0 | U | 1.6 | < 5.0 | 5.0 | U | 1.6 | | | | |
| N-Nitrosodiphenylamine | 86-30-6 | | 50 | < 5.0 | 5.0 | U | 1.9 | < 5.1 | 5.1 | U | 2.0 | < 5.0 | 5.0 | U | 1.9 | < 5.0 | 5.0 | U | 1.9 | < 5.0 | 5.0 | U | 1.9 | | | | |
| **Pesticides By SW8081B (ug/L)** | | | | | | | | | | | | | | | | | | | | | | | | | | | |
| 4,4' -DDD | 72-54-8 | 0.01 | 0.3 | < 0.010 | 0.010 | U | 0.010 | < 0.050 | 0.050 | U | 0.050 | < 0.010 | 0.010 | U | 0.010 | < 0.010 | 0.010 | U | 0.010 | < 0.010 | 0.010 | U | 0.010 | | | | |
| 4,4' -DDE | 72-55-9 | 0.01 | 0.2 | 0.025 | 0.010 | | 0.010 | 0.097 | 0.050 | | 0.050 | < 0.010 | 0.010 | U | 0.010 | < 0.010 | 0.010 | U | 0.010 | < 0.010 | 0.010 | U | 0.010 | | | | |
| 4,4' -DDT | 50-29-3 | 0.01 | 0.2 | < 0.010 | 0.010 | U | 0.010 | < 0.050 | 0.050 | U | 0.050 | < 0.010 | 0.010 | U | 0.010 | < 0.010 | 0.010 | U | 0.010 | < 0.010 | 0.010 | U | 0.010 | | | | |
| a-BHC | 319-84-6 | 0.05 | 0.01 | < 0.005 | 0.005 | U | 0.005 | < 0.050 | 0.050 | U | 0.050 | < 0.005 | 0.005 | U | 0.005 | < 0.005 | 0.005 | U | 0.005 | < 0.005 | 0.005 | U | 0.005 | | | | |
| a-chlordane | 5103-71-9 | | | < 0.010 | 0.010 | U | 0.010 | < 0.10 | 0.10 | U | 0.10 | < 0.010 | 0.010 | U | 0.010 | < 0.010 | 0.010 | U | 0.010 | < 0.010 | 0.010 | U | 0.010 | | | | |
| Alachlor | 15972-60-8 | | 0.5 | < 0.075 | 0.075 | U | 0.075 | < 0.050 | 0.050 | U | 0.050 | < 0.075 | 0.075 | U | 0.075 | < 0.075 | 0.075 | U | 0.075 | < 0.075 | 0.075 | U | 0.075 | | | | |
| Aldrin | 309-00-2 | 0.01 | | < 0.002 | 0.002 | U | 0.002 | < 0.015 | 0.015 | U | 0.015 | < 0.002 | 0.002 | U | 0.002 | < 0.002 | 0.002 | U | 0.002 | < 0.002 | 0.002 | U | 0.002 | | | | |
| b-BHC | 319-85-7 | 0.05 | 0.04 | < 0.005 | 0.005 | U | 0.005 | < 0.050 | 0.050 | U | 0.050 | < 0.005 | 0.005 | U | 0.005 | < 0.005 | 0.005 | U | 0.005 | < 0.005 | 0.005 | U | 0.005 | | | | |
| Chlordane | 57-74-9 | 0.1 | 0.05 | < 0.05 | 0.05 | U | 0.05 | < 0.50 | 0.50 | U | 0.50 | < 0.05 | 0.05 | U | 0.05 | < 0.05 | 0.05 | U | 0.05 | < 0.05 | 0.05 | U | 0.05 | | | | |
| d-BHC | 319-86-8 | 0.05 | 0.04 | < 0.005 | 0.005 | U | 0.005 | < 0.050 | 0.050 | U | 0.050 | < 0.005 | 0.005 | U | 0.005 | < 0.005 | 0.005 | U | 0.005 | < 0.005 | 0.005 | U | 0.005 | | | | |
| Dieldrin | 60-57-1 | 0.01 | 0.004 | < 0.002 | 0.002 | U | 0.002 | < 0.015 | 0.015 | U | 0.015 | < 0.004 | 0.004 | U | 0.004 | < 0.002 | 0.002 | U | 0.002 | < 0.003 | 0.003 | U | 0.003 | | | | |
| Endosulfan I | 959-98-8 | 0.1 | | < 0.010 | 0.010 | U | 0.010 | < 0.10 | 0.10 | U | 0.10 | < 0.010 | 0.010 | U | 0.010 | < 0.010 | 0.010 | U | 0.010 | < 0.010 | 0.010 | U | 0.010 | | | | |
| Endosulfan II | 33213-65-9 | 0.1 | | < 0.010 | 0.010 | U | 0.010 | < 0.10 | 0.10 | U | 0.10 | < 0.010 | 0.010 | U | 0.010 | < 0.010 | 0.010 | U | 0.010 | < 0.010 | 0.010 | U | 0.010 | | | | |
| Endosulfan Sulfate | 1031-07-8 | 0.1 | | < 0.010 | 0.010 | U | 0.010 | < 0.10 | 0.10 | U | 0.10 | < 0.010 | 0.010 | U | 0.010 | < 0.010 | 0.010 | U | 0.010 | < 0.010 | 0.010 | U | 0.010 | | | | |
| Endrin | 72-20-8 | 0.01 | | < 0.010 | 0.010 | U | 0.010 | < 0.050 | 0.050 | U | 0.050 | < 0.010 | 0.010 | U | 0.010 | < 0.010 | 0.010 | U | 0.010 | < 0.010 | 0.010 | U | 0.010 | | | | |
| Endrin Aldehyde | 7421-93-4 | | 5 | < 0.010 | 0.010 | U | 0.010 | < 0.10 | 0.10 | U | 0.10 | < 0.010 | 0.010 | U | 0.010 | < 0.010 | 0.010 | U | 0.010 | < 0.010 | 0.010 | U | 0.010 | | | | |
| Endrin ketone | 53494-70-5 | | 5 | < 0.010 | 0.010 | U | 0.010 | < 0.10 | 0.10 | U | 0.10 | < 0.010 | 0.010 | U | 0.010 | < 0.010 | 0.010 | U | 0.010 | < 0.010 | 0.010 | U | 0.010 | | | | |
| g-BHC (Lindane) | 58-89-9 | 0.05 | 0.05 | < 0.005 | 0.005 | U | 0.005 | < 0.050 | 0.050 | U | 0.050 | < 0.005 | 0.005 | U | 0.005 | < 0.005 | 0.005 | U | 0.005 | < 0.005 | 0.005 | U | 0.005 | | | | |
| g-chlordane | 5103-74-2 | 0.1 | | < 0.020 | 0.020 | U | 0.020 | < 0.10 | 0.10 | U | 0.10 | < 0.010 | 0.010 | U | 0.010 | < 0.010 | 0.010 | U | 0.010 | < 0.010 | 0.010 | U | 0.010 | | | | |
| Heptachlor | 76-44-8 | 0.01 | 0.04 | < 0.010 | 0.010 | U | 0.010 | < 0.050 | 0.050 | U | 0.050 | < 0.010 | 0.010 | U | 0.010 | < 0.010 | 0.010 | U | 0.010 | < 0.010 | 0.010 | U | 0.010 | | | | |
| Heptachlor epoxide | 1024-57-3 | 0.01 | 0.03 | < 0.010 | 0.010 | U | 0.010 | < 0.050 | 0.050 | U | 0.050 | < 0.010 | 0.010 | U | 0.010 | < 0.010 | 0.010 | U | 0.010 | < 0.010 | 0.010 | U | 0.010 | | | | |
| Methoxychlor | 72-43-5 | 35 | 35 | < 0.10 | 0.10 | U | 0.10 | < 0.10 | 0.10 | U | 0.10 | < 0.10 | 0.10 | U | 0.10 | < 0.10 | 0.10 | U | 0.10 | < 0.10 | 0.10 | U | 0.10 | | | | |
| Toxaphene | 8001-35-2 | | 0.06 | < 0.25 | 0.25 | U | 0.25 | < 2.0 | 2.0 | U | 2.0 | < 0.25 | 0.25 | U | 0.25 | < 0.25 | 0.25 | U | 0.25 | < 0.25 | 0.25 | U | 0.25 | | | | |
| **PCBs By E608/SW8082A (ug/L)** | | | | | | | | | | | | | | | | | | | | | | | | | | | |
| PCB-1016 | 12674-11-2 | 0.09 | 0.09 | < 0.050 | 0.050 | U | 0.050 | < 0.050 | 0.050 | U | 0.050 | < 0.050 | 0.050 | U | 0.050 | < 0.050 | 0.050 | U | 0.050 | < 0.050 | 0.050 | U | 0.050 | | | | |
| PCB-1221 | 11104-28-2 | 0.09 | 0.09 | < 0.050 | 0.050 | U | 0.050 | < 0.050 | 0.050 | U | 0.050 | < 0.050 | 0.050 | U | 0.050 | < 0.050 | 0.050 | U | 0.050 | < 0.050 | 0.050 | U | 0.050 | | | | |
| PCB-1232 | 11141-16-5 | 0.09 | 0.09 | < 0.050 | 0.050 | U | 0.050 | < 0.050 | 0.050 | U | 0.050 | < 0.050 | 0.050 | U | 0.050 | < 0.050 | 0.050 | U | 0.050 | < 0.050 | 0.050 | U | 0.050 | | | | |

**TABLE 3B**
**GROUNDWATER LABORATORY ANALYTICAL RESULTS SUMMARY**

**REMEDIAL INVESTIGATION**
**109-125 MARBLEDALE ROAD**
**TUCKAHOE, NEW YORK**
**BCP #C360143**

| Analyte | Lab Sample Id<br>Collection Date<br>Client Id<br>Matrix | | | BJ20806<br>5/21/2015<br>MW-6<br>Ground Water | | | | BJ21612<br>5/22/2015<br>MW-7<br>Ground Water | | | | BJ20807<br>5/21/2015<br>MW-8<br>Ground Water | | | | BJ20808<br>5/21/2015<br>MW-9<br>Ground Water | | | | BJ20809<br>5/21/2015<br>FIELD BLANK<br>Ground Water | | | | BJ20810<br>5/21/2015<br>TRIP BLANK<br>Ground Water | | | |
|---|---|---|---|---|---|---|---|---|---|---|---|---|---|---|---|---|---|---|---|---|---|---|---|---|---|---|---|
| | CAS | TAGM-GW | TOGS-WQ/GA | Result | RL | Qual | MDL | Result | RL | Qual | MDL | Result | RL | Qual | MDL | Result | RL | Qual | MDL | Result | RL | Qual | MDL | Result | RL | Qual | MDL |
| PCB-1242 | 53469-21-9 | 0.09 | 0.09 | < 0.050 | 0.050 | U | 0.050 | < 0.050 | 0.050 | U | 0.050 | < 0.050 | 0.050 | U | 0.050 | < 0.050 | 0.050 | U | 0.050 | < 0.050 | 0.050 | U | 0.050 | | | | |
| PCB-1248 | 12672-29-6 | 0.09 | 0.09 | < 0.050 | 0.050 | U | 0.050 | < 0.050 | 0.050 | U | 0.050 | < 0.050 | 0.050 | U | 0.050 | < 0.050 | 0.050 | U | 0.050 | < 0.050 | 0.050 | U | 0.050 | | | | |
| PCB-1254 | 11097-69-1 | 0.09 | 0.09 | < 0.050 | 0.050 | U | 0.050 | < 0.050 | 0.050 | U | 0.050 | < 0.050 | 0.050 | U | 0.050 | < 0.050 | 0.050 | U | 0.050 | < 0.050 | 0.050 | U | 0.050 | | | | |
| PCB-1260 | 11096-82-5 | 0.09 | 0.09 | < 0.050 | 0.050 | U | 0.050 | 0.34 | 0.050 | | 0.050 | < 0.050 | 0.050 | U | 0.050 | < 0.050 | 0.050 | U | 0.050 | < 0.050 | 0.050 | U | 0.050 | | | | |
| PCB-1262 | 37324-23-5 | | | < 0.050 | 0.050 | U | 0.050 | < 0.050 | 0.050 | U | 0.050 | < 0.050 | 0.050 | U | 0.050 | < 0.050 | 0.050 | U | 0.050 | < 0.050 | 0.050 | U | 0.050 | | | | |
| PCB-1268 | 11100-14-4 | | | < 0.050 | 0.050 | U | 0.050 | < 0.050 | 0.050 | U | 0.050 | < 0.050 | 0.050 | U | 0.050 | < 0.050 | 0.050 | U | 0.050 | < 0.050 | 0.050 | U | 0.050 | | | | |

Qualifiers

| | |
|---|---|
| U | The compound was anlayzed for but not detected at or above the MDL.<br>The number immediately preceding the "U" represents the PQL reporting level<br>corrected for percent solids, weight and/or volume calculations, and dilution factors. |
| J | The value is estimated. This flag is used<br>a) on form 1 when the compound is reported above the MDL, but below the PQL, and<br>b) on the Tentatively Identified Compounds (TIC) form for all compounds identified. |
| N | The concentration is based on the response fo the nearest internal. This flag<br>is used on the TIC form for all compounds identified. |
| S | This compound is a solvent that is used in the laboratory. Laboratory contamination is<br>suspected if concentration is less than five times the reporting level. |
| D | The reported concentration is the result of a diluted analysis. |
| (*) | See report for comment. |

Result Detected

RL Exceeds Criteria

Result Exceeds Criteria

1. Samples were obtained by HydroEnvironmental Solutions, Inc. of Someres< NY on May 21 and 22, 2015 and analyzed by Phoenix Environmental Laboratories, Inc. of Manchester, CT.
2. Phoenix Environmental reveiwed the analytical data and compared the analytical Reporting Limits to the NYSDEC ????????
3. Any Regulatory Excdeedances were color coded.
4. Sample MW-104 is a blind duplicate of sample MW-4 for QA/QC purposes.
5. Where analytical standards are blank, no standard has yet been established.

**TABLE 4A**
**SOIL VAPOR SAMPLE LABORATORY ANALYTICAL RESULTS SUMMARY**

**REMEDIAL INVESTIGATION**
**109-125 MARBLEDALE ROAD**
**TUCKAHOE, NEW YORK**
**BCP #C360143**

| Volatile Organic Compounds | Sample Designation and Result (in ppbv) | | | | | | | | | | | | | | | | | | | | | | | | | | | |
|---|---|---|---|---|---|---|---|---|---|---|---|---|---|---|---|---|---|---|---|---|---|---|---|---|---|---|---|---|
| | VP-1 | | | | VP-2 | | | | VP-3 | | | | VP-4 | | | | VP-5 | | | | Blind Dup of VP-5 (QA/QC) VP-105 | | | | VP-6 | | | |
| | 5/18/2015 | | | | 5/18/2015 | | | | 5/18/2015 | | | | 5/27/2015 | | | | 5/18/2015 | | | | 5/18/2015 | | | | 5/18/2015 | | | |
| | Result | RL | Qual | MDL | Result | RL | Qual | MDL | Result | RL | Qual | MDL | Result | RL | Qual | MDL | Result | RL | Qual | MDL | Result | RL | Qual | MDL | Result | RL | Qual | MDL |
| 1,1,1,2-Tetrachloroethane | < 0.146 | 0.146 | U | 0.146 | < 0.146 | 0.146 | U | 0.146 | < 0.146 | 0.146 | U | 0.146 | < 0.146 | 0.146 | U | 0.146 | < 0.146 | 0.146 | U | 0.146 | < 0.146 | 0.146 | U | 0.146 | < 0.146 | 0.146 | U | 0.146 |
| 1,1,1-Trichloroethane | < 0.183 | 0.183 | U | 0.183 | < 0.183 | 0.183 | U | 0.183 | < 0.183 | 0.183 | U | 0.183 | < 0.183 | 0.183 | U | 0.183 | < 0.183 | 0.183 | U | 0.183 | < 0.183 | 0.183 | U | 0.183 | < 0.183 | 0.183 | U | 0.183 |
| 1,1,2,2-Tetrachloroethane | < 0.146 | 0.146 | U | 0.146 | < 0.146 | 0.146 | U | 0.146 | < 0.146 | 0.146 | U | 0.146 | < 0.146 | 0.146 | U | 0.146 | < 0.146 | 0.146 | U | 0.146 | < 0.146 | 0.146 | U | 0.146 | < 0.146 | 0.146 | U | 0.146 |
| 1,1,2-Trichloroethane | < 0.183 | 0.183 | U | 0.183 | < 0.183 | 0.183 | U | 0.183 | < 0.183 | 0.183 | U | 0.183 | < 0.183 | 0.183 | U | 0.183 | < 0.183 | 0.183 | U | 0.183 | < 0.183 | 0.183 | U | 0.183 | < 0.183 | 0.183 | U | 0.183 |
| 1,1-Dichloroethane | < 0.247 | 0.247 | U | 0.247 | < 0.247 | 0.247 | U | 0.247 | < 0.247 | 0.247 | U | 0.247 | < 0.247 | 0.247 | U | 0.247 | < 0.247 | 0.247 | U | 0.247 | < 0.247 | 0.247 | U | 0.247 | < 0.247 | 0.247 | U | 0.247 |
| 1,1-Dichloroethene | < 0.252 | 0.252 | U | 0.252 | < 0.252 | 0.252 | U | 0.252 | < 0.252 | 0.252 | U | 0.252 | < 0.252 | 0.252 | U | 0.252 | < 0.252 | 0.252 | U | 0.252 | < 0.252 | 0.252 | U | 0.252 | < 0.252 | 0.252 | U | 0.252 |
| 1,2,4-Trichlorobenzene | < 0.135 | 0.135 | U | 0.135 | < 0.135 | 0.135 | U | 0.135 | < 0.135 | 0.135 | U | 0.135 | < 0.135 | 0.135 | U | 0.135 | < 0.135 | 0.135 | U | 0.135 | < 0.135 | 0.135 | U | 0.135 | < 0.135 | 0.135 | U | 0.135 |
| 1,2,4-Trimethylbenzene | 0.966 | 0.204 | | 0.204 | 0.87 | 0.204 | | 0.204 | 0.941 | 0.204 | | 0.204 | 1.36 | 0.204 | | 0.204 | 1.06 | 0.204 | | 0.204 | 1.02 | 0.204 | | 0.204 | 0.901 | 0.204 | | 0.204 |
| 1,2-Dibromoethane(EDB) | < 0.130 | 0.130 | U | 0.130 | < 0.130 | 0.130 | U | 0.130 | < 0.130 | 0.130 | U | 0.130 | < 0.130 | 0.130 | U | 0.130 | < 0.130 | 0.130 | U | 0.130 | < 0.130 | 0.130 | U | 0.130 | < 0.130 | 0.130 | U | 0.130 |
| 1,2-Dichlorobenzene | < 0.166 | 0.166 | U | 0.166 | < 0.166 | 0.166 | U | 0.166 | < 0.166 | 0.166 | U | 0.166 | < 0.166 | 0.166 | U | 0.166 | < 0.166 | 0.166 | U | 0.166 | < 0.166 | 0.166 | U | 0.166 | < 0.166 | 0.166 | U | 0.166 |
| 1,2-Dichloroethane | < 0.247 | 0.247 | U | 0.247 | < 0.247 | 0.247 | U | 0.247 | < 0.247 | 0.247 | U | 0.247 | < 0.247 | 0.247 | U | 0.247 | < 0.247 | 0.247 | U | 0.247 | < 0.247 | 0.247 | U | 0.247 | < 0.247 | 0.247 | U | 0.247 |
| 1,2-dichloropropane | < 0.217 | 0.217 | U | 0.217 | < 0.217 | 0.217 | U | 0.217 | < 0.217 | 0.217 | U | 0.217 | < 0.217 | 0.217 | U | 0.217 | < 0.217 | 0.217 | U | 0.217 | < 0.217 | 0.217 | U | 0.217 | < 0.217 | 0.217 | U | 0.217 |
| 1,2-Dichlorotetrafluoroethane | 4.89 | 0.143 | | 0.143 | 15.5 | 0.143 | | 0.143 | 2,160 | 57.3 | | 57.3 | 19.2 | 4.29 | | 4.29 | 1,250 | 28.6 | | 28.6 | 171 | 1.43 | | 1.43 | 20,300 | 137 | | 137 |
| 1,3,5-Trimethylbenzene | < 0.204 | 0.204 | U | 0.204 | < 0.204 | 0.204 | U | 0.204 | < 0.204 | 0.204 | U | 0.204 | 0.423 | 0.204 | | 0.204 | < 0.204 | 0.204 | U | 0.204 | < 0.204 | 0.204 | U | 0.204 | < 0.204 | 0.204 | U | 0.204 |
| 1,3-Butadiene | < 0.452 | 0.452 | U | 0.452 | < 0.452 | 0.452 | U | 0.452 | < 0.452 | 0.452 | U | 0.452 | < 0.452 | 0.452 | U | 0.452 | < 0.452 | 0.452 | U | 0.452 | < 0.452 | 0.452 | U | 0.452 | < 0.452 | 0.452 | U | 0.452 |
| 1,3-Dichlorobenzene | 0.704 | 0.166 | | 0.166 | 0.724 | 0.166 | | 0.166 | < 0.166 | 0.166 | U | 0.166 | < 0.166 | 0.166 | U | 0.166 | 0.772 | 0.166 | | 0.166 | 0.783 | 0.166 | | 0.166 | 0.612 | 0.166 | | 0.166 |
| 1,4-Dichlorobenzene | < 0.166 | 0.166 | U | 0.166 | < 0.166 | 0.166 | U | 0.166 | < 0.166 | 0.166 | U | 0.166 | < 0.166 | 0.166 | U | 0.166 | < 0.166 | 0.166 | U | 0.166 | < 0.166 | 0.166 | U | 0.166 | < 0.166 | 0.166 | U | 0.166 |
| 1,4-Dioxane | < 0.278 | 0.278 | U | 0.278 | < 0.278 | 0.278 | U | 0.278 | < 0.278 | 0.278 | U | 0.278 | < 0.278 | 0.278 | U | 0.278 | < 0.278 | 0.278 | U | 0.278 | < 0.278 | 0.278 | U | 0.278 | < 0.278 | 0.278 | U | 0.278 |
| 2-Hexanone(MBK) | < 0.244 | 0.244 | U | 0.244 | < 0.244 | 0.244 | U | 0.244 | < 0.244 | 0.244 | U | 0.244 | < 0.244 | 0.244 | U | 0.244 | < 0.244 | 0.244 | U | 0.244 | < 0.244 | 0.244 | U | 0.244 | < 0.244 | 0.244 | U | 0.244 |
| 4-Ethyltoluene | < 0.204 | 0.204 | U | 0.204 | 0.305 | 0.204 | | 0.204 | < 0.204 | 0.204 | U | 0.204 | 0.327 | 0.204 | | 0.204 | < 0.204 | 0.204 | U | 0.204 | < 0.204 | 0.204 | U | 0.204 | 0.421 | 0.204 | | 0.204 |
| 4-Isopropyltoluene | < 0.182 | 0.182 | U | 0.182 | < 0.182 | 0.182 | U | 0.182 | < 0.182 | 0.182 | U | 0.182 | 0.218 | 0.182 | | 0.182 | < 0.182 | 0.182 | U | 0.182 | < 0.182 | 0.182 | U | 0.182 | < 0.182 | 0.182 | U | 0.182 |
| 4-Methyl-2-pentanone(MIBK) | < 0.244 | 0.244 | U | 0.244 | < 0.244 | 0.244 | U | 0.244 | < 0.244 | 0.244 | U | 0.244 | < 0.244 | 0.244 | U | 0.244 | 0.477 | 0.244 | | 0.244 | 0.403 | 0.244 | | 0.244 | < 0.244 | 0.244 | U | 0.244 |
| Acetone | < 0.421 | 0.421 | U | 0.421 | < 0.421 | 0.421 | U | 0.421 | < 0.421 | 0.421 | U | 0.421 | < 0.421 | 0.421 | U | 0.421 | < 0.421 | 0.421 | U | 0.421 | < 0.421 | 0.421 | U | 0.421 | 108 | 4.21 | | 4.21 |
| Acrylonitrile | < 0.461 | 0.461 | U | 0.461 | < 0.461 | 0.461 | U | 0.461 | < 0.461 | 0.461 | U | 0.461 | < 0.461 | 0.461 | U | 0.461 | < 0.461 | 0.461 | U | 0.461 | < 0.461 | 0.461 | U | 0.461 | < 0.461 | 0.461 | U | 0.461 |
| Benzene | 0.898 | 0.313 | | 0.313 | 3.14 | 0.313 | | 0.313 | 73.8 | 12.5 | | 12.5 | 1.17 | 0.313 | | 0.313 | 1.18 | 0.313 | | 0.313 | 0.564 | 0.313 | | 0.313 | 15.7 | 0.313 | | 0.313 |
| Benzyl chloride | < 0.193 | 0.193 | U | 0.193 | < 0.193 | 0.193 | U | 0.193 | < 0.193 | 0.193 | U | 0.193 | < 0.193 | 0.193 | U | 0.193 | < 0.193 | 0.193 | U | 0.193 | < 0.193 | 0.193 | U | 0.193 | < 0.193 | 0.193 | U | 0.193 |
| Bromodichloromethane | < 0.149 | 0.149 | U | 0.149 | < 0.149 | 0.149 | U | 0.149 | < 0.149 | 0.149 | U | 0.149 | < 0.149 | 0.149 | U | 0.149 | < 0.149 | 0.149 | U | 0.149 | < 0.149 | 0.149 | U | 0.149 | < 0.149 | 0.149 | U | 0.149 |
| Bromoform | < 0.097 | 0.097 | U | 0.097 | < 0.097 | 0.097 | U | 0.097 | < 0.097 | 0.097 | U | 0.097 | < 0.097 | 0.097 | U | 0.097 | < 0.097 | 0.097 | U | 0.097 | < 0.097 | 0.097 | U | 0.097 | < 0.097 | 0.097 | U | 0.097 |
| Bromomethane | < 0.258 | 0.258 | U | 0.258 | < 0.258 | 0.258 | U | 0.258 | < 0.258 | 0.258 | U | 0.258 | < 0.258 | 0.258 | U | 0.258 | < 0.258 | 0.258 | U | 0.258 | < 0.258 | 0.258 | U | 0.258 | < 0.258 | 0.258 | U | 0.258 |
| Carbon Disulfide | 0.566 | 0.321 | | 0.321 | 0.739 | 0.321 | | 0.321 | 0.582 | 0.321 | | 0.321 | 2.4 | 0.321 | | 0.321 | < 0.321 | 0.321 | U | 0.321 | < 0.321 | 0.321 | U | 0.321 | 3.38 | 0.321 | | 0.321 |
| Carbon Tetrachloride | < 0.040 | 0.040 | U | 0.040 | < 0.040 | 0.040 | U | 0.040 | < 0.040 | 0.040 | U | 0.040 | 0.068 | 0.040 | | 0.040 | 0.072 | 0.040 | | 0.040 | 0.085 | 0.040 | | 0.040 | < 0.040 | 0.040 | U | 0.040 |
| Chlorobenzene | < 0.217 | 0.217 | U | 0.217 | < 0.217 | 0.217 | U | 0.217 | < 0.217 | 0.217 | U | 0.217 | < 0.217 | 0.217 | U | 0.217 | < 0.217 | 0.217 | U | 0.217 | < 0.217 | 0.217 | U | 0.217 | < 0.217 | 0.217 | U | 0.217 |
| Chloroethane | < 0.379 | 0.379 | U | 0.379 | < 0.379 | 0.379 | U | 0.379 | < 0.379 | 0.379 | U | 0.379 | < 0.379 | 0.379 | U | 0.379 | < 0.379 | 0.379 | U | 0.379 | < 0.379 | 0.379 | U | 0.379 | < 0.379 | 0.379 | U | 0.379 |
| Chloroform | < 0.205 | 0.205 | U | 0.205 | < 0.205 | 0.205 | U | 0.205 | < 0.205 | 0.205 | U | 0.205 | 0.435 | 0.205 | | 0.205 | < 0.205 | 0.205 | U | 0.205 | < 0.205 | 0.205 | U | 0.205 | 30.9 | 0.205 | | 0.205 |
| Chloromethane | < 0.485 | 0.485 | U | 0.485 | < 0.485 | 0.485 | U | 0.485 | < 0.485 | 0.485 | U | 0.485 | < 0.485 | 0.485 | U | 0.485 | < 0.485 | 0.485 | U | 0.485 | < 0.485 | 0.485 | U | 0.485 | < 0.485 | 0.485 | U | 0.485 |
| Cis-1,2-Dichloroethene | < 0.252 | 0.252 | U | 0.252 | < 0.252 | 0.252 | U | 0.252 | 2.51 | 0.252 | | 0.252 | < 0.252 | 0.252 | U | 0.252 | < 0.252 | 0.252 | U | 0.252 | < 0.252 | 0.252 | U | 0.252 | 2.26 | 0.252 | | 0.252 |
| cis-1,3-Dichloropropene | < 0.221 | 0.221 | U | 0.221 | < 0.221 | 0.221 | U | 0.221 | < 0.221 | 0.221 | U | 0.221 | < 0.221 | 0.221 | U | 0.221 | < 0.221 | 0.221 | U | 0.221 | < 0.221 | 0.221 | U | 0.221 | < 0.221 | 0.221 | U | 0.221 |
| Cyclohexane | 112 | 2.91 | | 2.91 | 16.8 | 0.291 | | 0.291 | 385 | 11.6 | | 11.6 | 18.4 | 0.291 | | 0.291 | 7.1 | 0.291 | | 0.291 | 2.85 | 0.291 | | 0.291 | 18 | 0.291 | | 0.291 |
| Dibromochloromethane | < 0.118 | 0.118 | U | 0.118 | < 0.118 | 0.118 | U | 0.118 | < 0.118 | 0.118 | U | 0.118 | < 0.118 | 0.118 | U | 0.118 | < 0.118 | 0.118 | U | 0.118 | < 0.118 | 0.118 | U | 0.118 | < 0.118 | 0.118 | U | 0.118 |
| Dichlorodifluoromethane | 9.01 | 0.202 | | 0.202 | 57.6 | 1.01 | | 1.01 | 2,650 | 80.9 | | 80.9 | 36.1 | 6.07 | | 6.07 | 1,320 | 40.5 | | 40.5 | 171 | 2.02 | | 2.02 | 21,600 | 194 | | 194 |
| Ethanol | 4.05 | 0.531 | | 0.531 | 9.54 | 0.531 | S | 0.531 | 12.8 | 0.531 | S | 0.531 | 42.3 | 15.9 | | 15.9 | 5.26 | 0.531 | S | 0.531 | 4.92 | 0.531 | | 0.531 | 1,140 | 127 | | 127 |
| Ethyl acetate | < 0.278 | 0.278 | U | 0.278 | < 0.278 | 0.278 | U | 0.278 | < 0.278 | 0.278 | U | 0.278 | < 0.278 | 0.278 | U | 0.278 | < 0.278 | 0.278 | U | 0.278 | < 0.278 | 0.278 | U | 0.278 | < 0.278 | 0.278 | U | 0.278 |
| Ethylbenzene | < 0.230 | 0.230 | U | 0.230 | 0.344 | 0.230 | | 0.230 | 0.37 | 0.230 | | 0.230 | 17.6 | 0.230 | | 0.230 | 0.245 | 0.230 | | 0.230 | < 0.230 | 0.230 | U | 0.230 | 2.57 | 0.230 | | 0.230 |
| Heptane | 3 | 0.244 | | 0.244 | 2.92 | 0.244 | | 0.244 | 268 | 9.77 | | 9.77 | 2.38 | 0.244 | | 0.244 | < 0.244 | 0.244 | U | 0.244 | < 0.244 | 0.244 | U | 0.244 | 39.9 | 0.244 | | 0.244 |
| Hexachlorobutadiene | < 0.094 | 0.094 | U | 0.094 | < 0.094 | 0.094 | U | 0.094 | < 0.094 | 0.094 | U | 0.094 | < 0.094 | 0.094 | U | 0.094 | < 0.094 | 0.094 | U | 0.094 | < 0.094 | 0.094 | U | 0.094 | < 0.094 | 0.094 | U | 0.094 |
| Hexane | 145 | 2.84 | | 2.84 | 16.8 | 0.284 | S | 0.284 | 1,480 | 11.4 | S | 11.4 | 8.34 | 0.284 | | 0.284 | 46 | 2.84 | S | 2.84 | 18.7 | 0.284 | | 0.284 | 83.1 | 2.84 | | 2.84 |
| Isopropylalcohol | 556 | 4.07 | E | 4.07 | 225 | 6.11 | S | 6.11 | 415 | 16.3 | S | 16.3 | 27.7 | 0.407 | | 0.407 | 444 | 4.07 | SE | 4.07 | 433 | 0.407 | E | 0.407 | 319 | 4.07 | | 4.07 |
| Isopropylbenzene | < 0.204 | 0.204 | U | 0.204 | < 0.204 | 0.204 | U | 0.204 | < 0.204 | 0.204 | U | 0.204 | 1.18 | 0.204 | | 0.204 | < 0.204 | 0.204 | U | 0.204 | < 0.204 | 0.204 | U | 0.204 | < 0.204 | 0.204 | U | 0.204 |
| m,p-Xylene | 0.808 | 0.230 | | 0.230 | 1.07 | 0.230 | | 0.230 | 1.03 | 0.230 | | 0.230 | 89.9 | 6.91 | | 6.91 | 0.846 | 0.230 | | 0.230 | 0.811 | 0.230 | | 0.230 | 1.71 | 0.230 | | 0.230 |

**TABLE 4A**
**SOIL VAPOR SAMPLE LABORATORY ANALYTICAL RESULTS SUMMARY**

**REMEDIAL INVESTIGATION**
**109-125 MARBLEDALE ROAD**
**TUCKAHOE, NEW YORK**
**BCP #C360143**

| Volatile Organic Compounds | Sample Designation and Result (in ppbv) | | | | | | | | | | | | | | | | | | | | | | | | | | | |
|---|---|---|---|---|---|---|---|---|---|---|---|---|---|---|---|---|---|---|---|---|---|---|---|---|---|---|---|---|
| | VP-1 | | | | VP-2 | | | | VP-3 | | | | VP-4 | | | | VP-5 | | | | Blind Dup of VP-5 (QA/QC) VP-105 | | | | VP-6 | | | |
| | 5/18/2015 | | | | 5/18/2015 | | | | 5/18/2015 | | | | 5/27/2015 | | | | 5/18/2015 | | | | 5/18/2015 | | | | 5/18/2015 | | | |
| | Result | RL | Qual | MDL | Result | RL | Qual | MDL | Result | RL | Qual | MDL | Result | RL | Qual | MDL | Result | RL | Qual | MDL | Result | RL | Qual | MDL | Result | RL | Qual | MDL |
| Methyl Ethyl Ketone | < 0.339 | 0.339 | U | 0.339 | 2.7 | 0.339 | | 0.339 | 34.2 | 0.339 | | 0.339 | < 0.339 | 0.339 | U | 0.339 | < 0.339 | 0.339 | U | 0.339 | < 0.339 | 0.339 | U | 0.339 | 6.42 | 0.339 | | 0.339 |
| Methyl tert-butyl ether (MTBE) | < 0.278 | 0.278 | U | 0.278 | < 0.278 | 0.278 | U | 0.278 | < 0.278 | 0.278 | U | 0.278 | < 0.278 | 0.278 | U | 0.278 | < 0.278 | 0.278 | U | 0.278 | < 0.278 | 0.278 | U | 0.278 | < 0.278 | 0.278 | U | 0.278 |
| Methylene Chloride | 1.01 | 0.288 | | 0.288 | 2.16 | 0.288 | S | 0.288 | < 0.288 | 0.288 | U | 0.288 | 1.1 | 0.288 | | 0.288 | < 0.288 | 0.288 | U | 0.288 | < 0.288 | 0.288 | U | 0.288 | 7.02 | 0.288 | | 0.288 |
| n-Butylbenzene | < 0.182 | 0.182 | U | 0.182 | < 0.182 | 0.182 | U | 0.182 | < 0.182 | 0.182 | U | 0.182 | 0.211 | 0.182 | | 0.182 | < 0.182 | 0.182 | U | 0.182 | < 0.182 | 0.182 | U | 0.182 | < 0.182 | 0.182 | U | 0.182 |
| o-Xylene | 0.319 | 0.230 | | 0.230 | 0.567 | 0.230 | | 0.230 | 0.502 | 0.230 | | 0.230 | 54.9 | 6.91 | | 6.91 | 0.286 | 0.230 | | 0.230 | 0.29 | 0.230 | | 0.230 | 0.714 | 0.230 | | 0.230 |
| Propylene | < 0.581 | 0.581 | U | 0.581 | < 0.581 | 0.581 | U | 0.581 | < 23.3 | 23.3 | U | 23.3 | < 0.581 | 0.581 | U | 0.581 | < 0.581 | 0.581 | U | 0.581 | < 0.581 | 0.581 | U | 0.581 | < 0.581 | 0.581 | U | 0.581 |
| sec-Butylbenzene | < 0.182 | 0.182 | U | 0.182 | < 0.182 | 0.182 | U | 0.182 | < 0.182 | 0.182 | U | 0.182 | < 0.182 | 0.182 | U | 0.182 | < 0.182 | 0.182 | U | 0.182 | < 0.182 | 0.182 | U | 0.182 | < 0.182 | 0.182 | U | 0.182 |
| Styrene | < 0.235 | 0.235 | U | 0.235 | < 0.235 | 0.235 | U | 0.235 | < 0.235 | 0.235 | U | 0.235 | 1 | 0.235 | | 0.235 | < 0.235 | 0.235 | U | 0.235 | < 0.235 | 0.235 | U | 0.235 | < 0.235 | 0.235 | U | 0.235 |
| Tetrachloroethene | 0.075 | 0.037 | | 0.037 | 0.144 | 0.037 | | 0.037 | 0.34 | 0.037 | | 0.037 | 0.212 | 0.037 | | 0.037 | 0.213 | 0.037 | | 0.037 | 0.217 | 0.037 | | 0.037 | 1.25 | 0.037 | | 0.037 |
| Tetrahydrofuran | 0.35 | 0.339 | | 0.339 | 0.956 | 0.339 | | 0.339 | < 0.339 | 0.339 | U | 0.339 | 2.42 | 0.339 | | 0.339 | < 0.339 | 0.339 | U | 0.339 | < 0.339 | 0.339 | U | 0.339 | 5.02 | 0.339 | | 0.339 |
| Toluene | 3.56 | 0.266 | | 0.266 | 5.31 | 0.266 | | 0.266 | 4.96 | 0.266 | | 0.266 | 6.58 | 0.266 | | 0.266 | 1.6 | 0.266 | | 0.266 | 1.31 | 0.266 | | 0.266 | 315 | 2.66 | | 2.66 |
| Trans-1,2-Dichloroethene | < 0.252 | 0.252 | U | 0.252 | < 0.252 | 0.252 | U | 0.252 | 2.94 | 0.252 | | 0.252 | < 0.252 | 0.252 | U | 0.252 | < 0.252 | 0.252 | U | 0.252 | < 0.252 | 0.252 | U | 0.252 | < 0.252 | 0.252 | U | 0.252 |
| trans-1,3-Dichloropropene | < 0.221 | 0.221 | U | 0.221 | < 0.221 | 0.221 | U | 0.221 | < 0.221 | 0.221 | U | 0.221 | < 0.221 | 0.221 | U | 0.221 | < 0.221 | 0.221 | U | 0.221 | < 0.221 | 0.221 | U | 0.221 | < 0.221 | 0.221 | U | 0.221 |
| Trichloroethene | 0.095 | 0.047 | | 0.047 | 0.191 | 0.047 | | 0.047 | 0.88 | 0.047 | | 0.047 | 0.1 | 0.047 | | 0.047 | 0.21 | 0.047 | | 0.047 | 0.194 | 0.047 | | 0.047 | 1.25 | 0.047 | | 0.047 |
| Trichlorofluoromethane | < 0.178 | 0.178 | U | 0.178 | < 0.178 | 0.178 | U | 0.178 | 0.232 | 0.178 | | 0.178 | < 0.178 | 0.178 | U | 0.178 | 0.291 | 0.178 | | 0.178 | 0.279 | 0.178 | | 0.178 | 1,100 | 42.7 | | 42.7 |
| Trichlorotrifluoroethane | < 0.131 | 0.131 | U | 0.131 | < 0.131 | 0.131 | U | 0.131 | 0.18 | 0.131 | | 0.131 | < 0.131 | 0.131 | U | 0.131 | 0.142 | 0.131 | | 0.131 | < 0.131 | 0.131 | U | 0.131 | 0.928 | 0.131 | | 0.131 |
| Vinyl Chloride | 0.131 | 0.098 | | 0.098 | 0.549 | 0.098 | | 0.098 | 36.7 | 0.098 | | 0.098 | < 0.098 | 0.098 | U | 0.098 | 8.16 | 0.098 | | 0.098 | 3.06 | 0.098 | | 0.098 | 5.49 | 0.098 | | 0.098 |

**Legend:**
ppbv = Parts per billion volume/volume concentration
RL = Laboratory Reporting Limit
0.549 = Compound detected and concentration (ppbv)
MDL = Method Detection Limit. The minimum reportable concentration that can be measured with 99% confidence, as defined in 40CFR part 136 (Appendix B).
Qual = Laboratory and/or Data Validation Qualifier:
U = Compound was not detected at or above the MDL.
E = The reported value is estimated because the concentration exceeded the calibration range.
S = This compound is a solvent that is used in the laboratory. Laboratory contamination is suspected if concentration is less than five times the reporting level.

**Notes:**
1. The samples were collected from subsurface soil vapor probes installed by HydroEnvironmental Solutions, Inc. to a total depth of 6-feet below grade.
2. The samples were collected in 6-liter summa canisters with an installed flow regulator. The collected samples were analyzed by Phoenix Environmental Laboratories of Manchester, Connecticut.
3. Data validation performed by Premier Evironmental Services of Merrick, New York.

**TABLE 4B**
**SOIL VAPOR SAMPLE LABORATORY ANALYTICAL RESULTS SUMMARY**

**REMEDIAL INVESTIGATION**
**109-125 MARBLEDALE ROAD**
**TUCKAHOE, NEW YORK**
**BCP #C360143**

| VOLATILE ORGANIC COMPOUNDS | Sample Designation and Result (in ppbv) | | | | | | | | | | | | | | | | | | | | | | | |
|---|---|---|---|---|---|---|---|---|---|---|---|---|---|---|---|---|---|---|---|---|---|---|---|---|
| | VP-7 | | | | VP-8 | | | | VP-9 | | | | VP-10 | | | | VP-11 | | | | VP-12 | | | |
| | 5/18/2015 | | | | 5/18/2015 | | | | 5/18/2015 | | | | 5/18/2015 | | | | 5/18/2015 | | | | 5/18/2015 | | | |
| | Result | RL | Qual | MDL | Result | RL | Qual | MDL | Result | RL | Qual | MDL | Result | RL | Qual | MDL | Result | RL | Qual | MDL | Result | RL | Qual | MDL |
| 1,1,1,2-Tetrachloroethane | < 0.146 | 0.146 | U | 0.146 | < 0.146 | 0.146 | U | 0.146 | < 0.146 | 0.146 | U | 0.146 | < 0.146 | 0.146 | U | 0.146 | < 0.146 | 0.146 | U | 0.146 | < 0.146 | 0.146 | U | 0.146 |
| 1,1,1-Trichloroethane | < 0.183 | 0.183 | U | 0.183 | < 0.183 | 0.183 | U | 0.183 | < 0.183 | 0.183 | U | 0.183 | 19.4 | 0.183 | | 0.183 | < 0.183 | 0.183 | U | 0.183 | < 0.183 | 0.183 | U | 0.183 |
| 1,1,2,2-Tetrachloroethane | < 0.146 | 0.146 | U | 0.146 | < 0.146 | 0.146 | U | 0.146 | < 0.146 | 0.146 | U | 0.146 | < 0.146 | 0.146 | U | 0.146 | < 0.146 | 0.146 | U | 0.146 | < 0.146 | 0.146 | U | 0.146 |
| 1,1,2-Trichloroethane | < 0.183 | 0.183 | U | 0.183 | < 0.183 | 0.183 | U | 0.183 | < 0.183 | 0.183 | U | 0.183 | < 0.183 | 0.183 | U | 0.183 | < 0.183 | 0.183 | U | 0.183 | < 0.183 | 0.183 | U | 0.183 |
| 1,1-Dichloroethane | 0.644 | 0.247 | | 0.247 | < 0.247 | 0.247 | U | 0.247 | < 0.247 | 0.247 | U | 0.247 | 1.01 | 0.247 | | 0.247 | < 0.247 | 0.247 | U | 0.247 | < 0.247 | 0.247 | U | 0.247 |
| 1,1-Dichloroethene | < 0.252 | 0.252 | U | 0.252 | < 0.252 | 0.252 | U | 0.252 | < 0.252 | 0.252 | U | 0.252 | < 0.252 | 0.252 | U | 0.252 | < 0.252 | 0.252 | U | 0.252 | < 0.252 | 0.252 | U | 0.252 |
| 1,2,4-Trichlorobenzene | < 0.135 | 0.135 | U | 0.135 | < 0.135 | 0.135 | U | 0.135 | < 0.135 | 0.135 | U | 0.135 | < 0.135 | 0.135 | U | 0.135 | < 0.135 | 0.135 | U | 0.135 | < 0.135 | 0.135 | U | 0.135 |
| 1,2,4-Trimethylbenzene | 1.03 | 0.204 | | 0.204 | 0.968 | 0.204 | | 0.204 | 0.967 | 0.204 | | 0.204 | 0.908 | 0.204 | | 0.204 | 0.914 | 0.204 | | 0.204 | 1.04 | 0.204 | | 0.204 |
| 1,2-Dibromoethane(EDB) | < 0.130 | 0.130 | U | 0.130 | < 0.130 | 0.130 | U | 0.130 | < 0.130 | 0.130 | U | 0.130 | < 0.130 | 0.130 | U | 0.130 | < 0.130 | 0.130 | U | 0.130 | < 0.130 | 0.130 | U | 0.130 |
| 1,2-Dichlorobenzene | < 0.166 | 0.166 | U | 0.166 | < 0.166 | 0.166 | U | 0.166 | < 0.166 | 0.166 | U | 0.166 | < 0.166 | 0.166 | U | 0.166 | < 0.166 | 0.166 | U | 0.166 | < 0.166 | 0.166 | U | 0.166 |
| 1,2-Dichloroethane | < 0.247 | 0.247 | U | 0.247 | < 0.247 | 0.247 | U | 0.247 | < 0.247 | 0.247 | U | 0.247 | < 0.247 | 0.247 | U | 0.247 | < 0.247 | 0.247 | U | 0.247 | < 0.247 | 0.247 | U | 0.247 |
| 1,2-dichloropropane | < 0.217 | 0.217 | U | 0.217 | < 0.217 | 0.217 | U | 0.217 | < 0.217 | 0.217 | U | 0.217 | < 0.217 | 0.217 | U | 0.217 | < 0.217 | 0.217 | U | 0.217 | < 0.217 | 0.217 | U | 0.217 |
| 1,2-Dichlorotetrafluoroethane | 4,330 | 30.1 | | 30.1 | 74.8 | 2.15 | | 2.15 | 100 | 4.29 | | 4.29 | < 0.143 | 0.143 | U | 0.143 | 5,280 | 57.3 | | 57.3 | 76.4 | 5.73 | | 5.73 |
| 1,3,5-Trimethylbenzene | < 0.204 | 0.204 | U | 0.204 | < 0.204 | 0.204 | U | 0.204 | < 0.204 | 0.204 | U | 0.204 | < 0.204 | 0.204 | U | 0.204 | < 0.204 | 0.204 | U | 0.204 | < 0.204 | 0.204 | U | 0.204 |
| 1,3-Butadiene | < 0.452 | 0.452 | U | 0.452 | < 0.452 | 0.452 | U | 0.452 | < 0.452 | 0.452 | U | 0.452 | < 0.452 | 0.452 | U | 0.452 | < 0.452 | 0.452 | U | 0.452 | < 0.452 | 0.452 | U | 0.452 |
| 1,3-Dichlorobenzene | 0.901 | 0.166 | | 0.166 | 0.596 | 0.166 | | 0.166 | 0.587 | 0.166 | | 0.166 | 0.363 | 0.166 | | 0.166 | 1.06 | 0.166 | | 0.166 | 0.631 | 0.166 | | 0.166 |
| 1,4-Dichlorobenzene | < 0.166 | 0.166 | U | 0.166 | < 0.166 | 0.166 | U | 0.166 | < 0.166 | 0.166 | U | 0.166 | < 0.166 | 0.166 | U | 0.166 | < 0.166 | 0.166 | U | 0.166 | < 0.166 | 0.166 | U | 0.166 |
| 1,4-Dioxane | < 0.278 | 0.278 | U | 0.278 | < 0.278 | 0.278 | U | 0.278 | < 0.278 | 0.278 | U | 0.278 | < 0.278 | 0.278 | U | 0.278 | < 0.278 | 0.278 | U | 0.278 | < 0.278 | 0.278 | U | 0.278 |
| 2-Hexanone(MBK) | < 0.244 | 0.244 | U | 0.244 | < 0.244 | 0.244 | U | 0.244 | < 0.244 | 0.244 | U | 0.244 | < 0.244 | 0.244 | U | 0.244 | < 0.244 | 0.244 | U | 0.244 | < 0.244 | 0.244 | U | 0.244 |
| 4-Ethyltoluene | < 0.204 | 0.204 | U | 0.204 | < 0.204 | 0.204 | U | 0.204 | < 0.204 | 0.204 | U | 0.204 | < 0.204 | 0.204 | U | 0.204 | < 0.204 | 0.204 | U | 0.204 | < 0.204 | 0.204 | U | 0.204 |
| 4-Isopropyltoluene | < 0.182 | 0.182 | U | 0.182 | < 0.182 | 0.182 | U | 0.182 | < 0.182 | 0.182 | U | 0.182 | < 0.182 | 0.182 | U | 0.182 | < 0.182 | 0.182 | U | 0.182 | < 0.182 | 0.182 | U | 0.182 |
| 4-Methyl-2-pentanone(MIBK) | < 0.244 | 0.244 | U | 0.244 | 0.389 | 0.244 | | 0.244 | < 0.244 | 0.244 | U | 0.244 | 0.327 | 0.244 | | 0.244 | < 0.244 | 0.244 | U | 0.244 | 0.4 | 0.244 | | 0.244 |
| Acetone | < 88.5 | 88.5 | U | 88.5 | 42.2 | 6.32 | S | 6.32 | 133 | 12.6 | | 12.6 | 35.4 | 4.21 | S | 4.21 | 41.1 | 16.8 | S | 16.8 | 64.6 | 16.8 | S | 16.8 |
| Acrylonitrile | < 0.461 | 0.461 | U | 0.461 | < 0.461 | 0.461 | U | 0.461 | < 0.461 | 0.461 | U | 0.461 | < 0.461 | 0.461 | U | 0.461 | < 0.461 | 0.461 | U | 0.461 | < 0.461 | 0.461 | U | 0.461 |
| Benzene | 21.5 | 0.313 | | 0.313 | 1.21 | 0.313 | | 0.313 | 9.09 | 0.313 | | 0.313 | < 0.313 | 0.313 | U | 0.313 | 0.651 | 0.313 | | 0.313 | < 0.313 | 0.313 | U | 0.313 |
| Benzyl chloride | < 0.193 | 0.193 | U | 0.193 | < 0.193 | 0.193 | U | 0.193 | < 0.193 | 0.193 | U | 0.193 | < 0.193 | 0.193 | U | 0.193 | < 0.193 | 0.193 | U | 0.193 | < 0.193 | 0.193 | U | 0.193 |
| Bromodichloromethane | < 0.149 | 0.149 | U | 0.149 | < 0.149 | 0.149 | U | 0.149 | < 0.149 | 0.149 | U | 0.149 | < 0.149 | 0.149 | U | 0.149 | < 0.149 | 0.149 | U | 0.149 | < 0.149 | 0.149 | U | 0.149 |
| Bromoform | < 0.097 | 0.097 | U | 0.097 | < 0.097 | 0.097 | U | 0.097 | < 0.097 | 0.097 | U | 0.097 | < 0.097 | 0.097 | U | 0.097 | < 0.097 | 0.097 | U | 0.097 | < 0.097 | 0.097 | U | 0.097 |
| Bromomethane | < 0.258 | 0.258 | U | 0.258 | < 0.258 | 0.258 | U | 0.258 | < 0.258 | 0.258 | U | 0.258 | < 0.258 | 0.258 | U | 0.258 | < 0.258 | 0.258 | U | 0.258 | < 0.258 | 0.258 | U | 0.258 |
| Carbon Disulfide | 18.8 | 0.321 | | 0.321 | < 0.321 | 0.321 | U | 0.321 | 0.369 | 0.321 | | 0.321 | 0.424 | 0.321 | | 0.321 | < 0.321 | 0.321 | U | 0.321 | 0.359 | 0.321 | | 0.321 |
| Carbon Tetrachloride | < 0.040 | 0.040 | U | 0.040 | < 0.040 | 0.040 | U | 0.040 | < 0.040 | 0.040 | U | 0.040 | < 0.040 | 0.040 | U | 0.040 | < 0.040 | 0.040 | U | 0.040 | < 0.040 | 0.040 | U | 0.040 |
| Chlorobenzene | < 0.217 | 0.217 | U | 0.217 | < 0.217 | 0.217 | U | 0.217 | < 0.217 | 0.217 | U | 0.217 | < 0.217 | 0.217 | U | 0.217 | < 0.217 | 0.217 | U | 0.217 | < 0.217 | 0.217 | U | 0.217 |
| Chloroethane | < 0.379 | 0.379 | U | 0.379 | < 0.379 | 0.379 | U | 0.379 | < 0.379 | 0.379 | U | 0.379 | < 0.379 | 0.379 | U | 0.379 | < 0.379 | 0.379 | U | 0.379 | < 0.379 | 0.379 | U | 0.379 |
| Chloroform | 0.832 | 0.205 | | 0.205 | 0.303 | 0.205 | | 0.205 | 0.583 | 0.205 | | 0.205 | 0.896 | 0.205 | | 0.205 | 0.809 | 0.205 | | 0.205 | < 0.205 | 0.205 | U | 0.205 |
| Chloromethane | < 0.485 | 0.485 | U | 0.485 | < 0.485 | 0.485 | U | 0.485 | < 0.485 | 0.485 | U | 0.485 | < 0.485 | 0.485 | U | 0.485 | < 0.485 | 0.485 | U | 0.485 | < 0.485 | 0.485 | U | 0.485 |
| Cis-1,2-Dichloroethene | 5.28 | 0.252 | | 0.252 | < 0.252 | 0.252 | U | 0.252 | 0.581 | 0.252 | | 0.252 | < 0.252 | 0.252 | U | 0.252 | < 0.252 | 0.252 | U | 0.252 | < 0.252 | 0.252 | U | 0.252 |
| cis-1,3-Dichloropropene | < 0.221 | 0.221 | U | 0.221 | < 0.221 | 0.221 | U | 0.221 | < 0.221 | 0.221 | U | 0.221 | < 0.221 | 0.221 | U | 0.221 | < 0.221 | 0.221 | U | 0.221 | < 0.221 | 0.221 | U | 0.221 |
| Cyclohexane | 10.1 | 0.291 | | 0.291 | < 0.291 | 0.291 | U | 0.291 | 50.8 | 8.72 | | 8.72 | < 0.291 | 0.291 | U | 0.291 | 4.73 | 0.291 | | 0.291 | < 0.291 | 0.291 | U | 0.291 |
| Dibromochloromethane | < 0.118 | 0.118 | U | 0.118 | < 0.118 | 0.118 | U | 0.118 | < 0.118 | 0.118 | U | 0.118 | < 0.118 | 0.118 | U | 0.118 | < 0.118 | 0.118 | U | 0.118 | < 0.118 | 0.118 | U | 0.118 |
| Dichlorodifluoromethane | 4,670 | 42.5 | | 42.5 | 305 | 3.04 | | 3.04 | 276 | 6.07 | | 6.07 | 282 | 3.04 | | 3.04 | 8,320 | 80.9 | | 80.9 | 587 | 8.09 | | 8.09 |
| Ethanol | 9.88 | 0.531 | S | 0.531 | 2.92 | 0.531 | S | 0.531 | 7.12 | 0.531 | | 0.531 | 3.93 | 0.531 | S | 0.531 | 2.93 | 0.531 | S | 0.531 | 3.08 | 0.531 | S | 0.531 |

**TABLE 4B**
**SOIL VAPOR SAMPLE LABORATORY ANALYTICAL RESULTS SUMMARY**

**REMEDIAL INVESTIGATION**
**109-125 MARBLEDALE ROAD**
**TUCKAHOE, NEW YORK**
**BCP #C360143**

| VOLATILE ORGANIC COMPOUNDS | Sample Designation and Result (in ppbv) | | | | | | | | | | | | | | | | | | | | | | | |
|---|---|---|---|---|---|---|---|---|---|---|---|---|---|---|---|---|---|---|---|---|---|---|---|---|
| | VP-7 | | | | VP-8 | | | | VP-9 | | | | VP-10 | | | | VP-11 | | | | VP-12 | | | |
| | 5/18/2015 | | | | 5/18/2015 | | | | 5/18/2015 | | | | 5/18/2015 | | | | 5/18/2015 | | | | 5/18/2015 | | | |
| | Result | RL | Qual | MDL | Result | RL | Qual | MDL | Result | RL | Qual | MDL | Result | RL | Qual | MDL | Result | RL | Qual | MDL | Result | RL | Qual | MDL |
| Ethyl acetate | < 0.278 | 0.278 | U | 0.278 | 0.297 | 0.278 | | 0.278 | < 0.278 | 0.278 | U | 0.278 | 0.347 | 0.278 | | 0.278 | < 0.278 | 0.278 | U | 0.278 | < 0.278 | 0.278 | U | 0.278 |
| Ethylbenzene | 0.343 | 0.230 | | 0.230 | < 0.230 | 0.230 | U | 0.230 | 0.467 | 0.230 | | 0.230 | 0.271 | 0.230 | | 0.230 | 0.285 | 0.230 | | 0.230 | 0.237 | 0.230 | | 0.230 |
| Heptane | 3.57 | 0.244 | | 0.244 | 0.502 | 0.244 | | 0.244 | 15.6 | 0.244 | | 0.244 | 0.438 | 0.244 | | 0.244 | 0.738 | 0.244 | | 0.244 | 0.463 | 0.244 | | 0.244 |
| Hexachlorobutadiene | < 0.094 | 0.094 | U | 0.094 | < 0.094 | 0.094 | U | 0.094 | < 0.094 | 0.094 | U | 0.094 | < 0.094 | 0.094 | U | 0.094 | < 0.094 | 0.094 | U | 0.094 | < 0.094 | 0.094 | U | 0.094 |
| Hexane | 10.5 | 0.284 | S | 0.284 | 0.369 | 0.284 | S | 0.284 | 37.6 | 0.284 | | 0.284 | 0.785 | 0.284 | S | 0.284 | 8.62 | 0.284 | S | 0.284 | 0.453 | 0.284 | S | 0.284 |
| Isopropylalcohol | 413 | 0.407 | SE | 0.407 | 346 | 6.11 | S | 6.11 | 289 | 12.2 | | 12.2 | 318 | 4.07 | S | 4.07 | 235 | 16.3 | S | 16.3 | 403 | 0.407 | SE | 0.407 |
| Isopropylbenzene | < 0.204 | 0.204 | U | 0.204 | < 0.204 | 0.204 | U | 0.204 | < 0.204 | 0.204 | U | 0.204 | < 0.204 | 0.204 | U | 0.204 | < 0.204 | 0.204 | U | 0.204 | < 0.204 | 0.204 | U | 0.204 |
| m,p-Xylene | 0.931 | 0.230 | | 0.230 | 0.782 | 0.230 | | 0.230 | 1.29 | 0.230 | | 0.230 | 0.929 | 0.230 | | 0.230 | 0.947 | 0.230 | | 0.230 | 0.818 | 0.230 | | 0.230 |
| Methyl Ethyl Ketone | 6.8 | 0.339 | | 0.339 | 1.22 | 0.339 | | 0.339 | 2.5 | 0.339 | | 0.339 | 1.03 | 0.339 | | 0.339 | 1.64 | 0.339 | | 0.339 | 1.34 | 0.339 | | 0.339 |
| Methyl tert-butyl ether (MTBE) | < 0.278 | 0.278 | U | 0.278 | 2.05 | 0.278 | | 0.278 | < 0.278 | 0.278 | U | 0.278 | 1.73 | 0.278 | | 0.278 | < 0.278 | 0.278 | U | 0.278 | 2.02 | 0.278 | | 0.278 |
| Methylene Chloride | 12.9 | 0.288 | S | 0.288 | < 0.288 | 0.288 | U | 0.288 | 0.612 | 0.288 | | 0.288 | 6.01 | 0.288 | S | 0.288 | 1.23 | 0.288 | S | 0.288 | < 0.288 | 0.288 | U | 0.288 |
| n-Butylbenzene | < 0.182 | 0.182 | U | 0.182 | < 0.182 | 0.182 | U | 0.182 | < 0.182 | 0.182 | U | 0.182 | < 0.182 | 0.182 | U | 0.182 | < 0.182 | 0.182 | U | 0.182 | < 0.182 | 0.182 | U | 0.182 |
| o-Xylene | 0.401 | 0.230 | | 0.230 | 0.267 | 0.230 | | 0.230 | 0.514 | 0.230 | | 0.230 | 0.323 | 0.230 | | 0.230 | 0.335 | 0.230 | | 0.230 | 0.275 | 0.230 | | 0.230 |
| Propylene | 249 | 122 | | 122 | < 0.581 | 0.581 | U | 0.581 | < 0.581 | 0.581 | U | 0.581 | < 0.581 | 0.581 | U | 0.581 | 21 | 0.581 | | 0.581 | < 0.581 | 0.581 | U | 0.581 |
| sec-Butylbenzene | < 0.182 | 0.182 | U | 0.182 | < 0.182 | 0.182 | U | 0.182 | < 0.182 | 0.182 | U | 0.182 | < 0.182 | 0.182 | U | 0.182 | < 0.182 | 0.182 | U | 0.182 | < 0.182 | 0.182 | U | 0.182 |
| Styrene | < 0.235 | 0.235 | U | 0.235 | < 0.235 | 0.235 | U | 0.235 | < 0.235 | 0.235 | U | 0.235 | < 0.235 | 0.235 | U | 0.235 | < 0.235 | 0.235 | U | 0.235 | < 0.235 | 0.235 | U | 0.235 |
| Tetrachloroethene | 10.4 | 0.037 | | 0.037 | 0.408 | 0.037 | | 0.037 | 0.285 | 0.037 | | 0.037 | 0.997 | 0.037 | | 0.037 | 1.34 | 0.037 | | 0.037 | 0.472 | 0.037 | | 0.037 |
| Tetrahydrofuran | 4.82 | 0.339 | | 0.339 | 0.559 | 0.339 | | 0.339 | 2.34 | 0.339 | | 0.339 | < 0.339 | 0.339 | U | 0.339 | < 0.339 | 0.339 | U | 0.339 | 0.579 | 0.339 | | 0.339 |
| Toluene | 11.4 | 0.266 | | 0.266 | 3.79 | 0.266 | | 0.266 | 7.29 | 0.266 | | 0.266 | 5.32 | 0.266 | | 0.266 | 4.94 | 0.266 | | 0.266 | 3.8 | 0.266 | | 0.266 |
| Trans-1,2-Dichloroethene | 1.17 | 0.252 | | 0.252 | < 0.252 | 0.252 | U | 0.252 | < 0.252 | 0.252 | U | 0.252 | < 0.252 | 0.252 | U | 0.252 | < 0.252 | 0.252 | U | 0.252 | < 0.252 | 0.252 | U | 0.252 |
| trans-1,3-Dichloropropene | < 0.221 | 0.221 | U | 0.221 | < 0.221 | 0.221 | U | 0.221 | < 0.221 | 0.221 | U | 0.221 | < 0.221 | 0.221 | U | 0.221 | < 0.221 | 0.221 | U | 0.221 | < 0.221 | 0.221 | U | 0.221 |
| Trichloroethene | 4.76 | 0.047 | | 0.047 | 0.141 | 0.047 | | 0.047 | 0.281 | 0.047 | | 0.047 | 0.175 | 0.047 | | 0.047 | 0.368 | 0.047 | | 0.047 | 0.048 | 0.047 | | 0.047 |
| Trichlorofluoromethane | 404 | 37.4 | | 37.4 | 17.9 | 0.178 | | 0.178 | 11.3 | 0.178 | | 0.178 | 6.22 | 0.178 | | 0.178 | 25.1 | 0.178 | | 0.178 | 6.72 | 0.178 | | 0.178 |
| Trichlorotrifluoroethane | 0.183 | 0.131 | | 0.131 | < 0.131 | 0.131 | U | 0.131 | < 0.131 | 0.131 | U | 0.131 | 0.254 | 0.131 | | 0.131 | 1.77 | 0.131 | | 0.131 | 0.176 | 0.131 | | 0.131 |
| Vinyl Chloride | 33.1 | 0.098 | | 0.098 | < 0.098 | 0.098 | U | 0.098 | 0.313 | 0.098 | | 0.098 | < 0.098 | 0.098 | U | 0.098 | < 0.098 | 0.098 | U | 0.098 | < 0.098 | 0.098 | U | 0.098 |

**Legend:**
ppbv = Parts per billion volume/volume concentration
RL = Laboratory Reporting Limit
0.549 = Compound detected and concentration (ppbv)
MDL = Method Detection Limit. The minimum reportable concentration that can be measured with 99% confidence, as defined in 40CFR part 136 (Appendix B).
Qual = Laboratory and/or Data Validation Qualifier:
U = Compound was not detected at or above the MDL.
E = The reported value is estimated because the concentration exceeded the calibration range.
S = This compound is a solvent that is used in the laboratory. Laboratory contamination is suspected if concentration is less than five times the reporting level.

**Notes:**
1. The samples were collected from subsurface soil vapor probes installed by HydroEnvironmental Solutions, Inc. to a total depth of 6-feet below grade.
2. The samples were collected in 6-liter summa canisters with an installed flow regulator. The collected samples were analyzed by Phoenix Environmental Laboratories of Manchester, Connecticut.
3. Data validation performed by Premier Evironmental Services of Merrick, New York.

**TABLE 5A**
**SUBSURFACE SOIL LABORATORY ANALYTICAL RESULTS SUMMARY**

**REMEDIAL INVESTIGATION**
**109-125 MARBLEDALE ROAD**
**TUCKAHOE, NEW YORK**
**BCP # C360143**

| Analyte | Lab Sample Id<br>Collection Date<br>Client Id<br>Matrix | | | | BJ03572<br>4/15/2015<br>TB-1 (10-12)<br>Solid | | | | BJ03573<br>4/15/2015<br>TB-1 (20-22)<br>Solid | | | | BJ03574<br>4/15/2015<br>TB-101 (20-22)<br>Solid | | | | BJ03575<br>4/15/2015<br>TB-1 (14-22)<br>Solid | | | | BJ03576<br>4/15/2015<br>TB-101 (14-22)<br>Solid | | | | BJ03570<br>4/15/2015<br>TB-2 (2-4)<br>Solid | | | | BJ03571<br>4/15/2015<br>TB-2 (18-20)<br>Solid | | | |
|---|---|---|---|---|---|---|---|---|---|---|---|---|---|---|---|---|---|---|---|---|---|---|---|---|---|---|---|---|---|---|---|---|
| | Units | NY-Res. | NY-ResRestrict | NY-UnRestricted | Result | RL | Qual | MDL | Result | RL | Qual | MDL | Result | RL | Qual | MDL | Result | RL | Qual | MDL | Result | RL | Qual | MDL | Result | RL | Qual | MDL | Result | RL | Qual | MDL |
| Volatiles (TCL) By SW8260C | | | | | | | | | | | | | | | | | | | | | | | | | | | | | | | | |
| 1,1,1-Trichloroethane | ug/kg | 100,000 | 100,000 | 680 | < 5.1 | 5.1 | U | 0.51 | < 5.0 | 5.0 | U | 0.50 | < 3.8 | 3.8 | U | 0.38 | | | | | | | | | < 6.7 | 6.7 | U | 0.67 | < 6.3 | 6.3 | U | 0.63 |
| 1,1,2,2-Tetrachloroethane | ug/kg | | | | < 5.1 | 5.1 | U | 1.0 | < 5.0 | 5.0 | U | 1.0 | < 3.8 | 3.8 | U | 0.75 | | | | | | | | | < 6.7 | 6.7 | U | 1.3 | < 6.3 | 6.3 | U | 1.3 |
| 1,1,2-Trichloroethane | ug/kg | | | | < 5.1 | 5.1 | U | 1.0 | < 5.0 | 5.0 | U | 1.0 | < 3.8 | 3.8 | U | 0.75 | | | | | | | | | < 6.7 | 6.7 | U | 1.3 | < 6.3 | 6.3 | U | 1.3 |
| 1,1-Dichloroethane | ug/kg | 19,000 | 26,000 | 270 | < 5.1 | 5.1 | U | 1.0 | < 5.0 | 5.0 | U | 1.0 | < 3.8 | 3.8 | U | 0.75 | | | | | | | | | < 6.7 | 6.7 | U | 1.3 | < 6.3 | 6.3 | U | 1.3 |
| 1,1-Dichloroethene | ug/kg | 100,000 | 100,000 | 330 | < 5.1 | 5.1 | U | 0.51 | < 5.0 | 5.0 | U | 0.50 | < 3.8 | 3.8 | U | 0.38 | | | | | | | | | < 6.7 | 6.7 | U | 0.67 | < 6.3 | 6.3 | U | 0.63 |
| 1,2,3-Trichlorobenzene | ug/kg | | | | < 5.1 | 5.1 | U | 1.0 | < 250 | 250 | U | 50 | < 330 | 330 | U | 65 | | | | | | | | | < 290 | 290 | U | 57 | < 6.3 | 6.3 | U | 1.3 |
| 1,2,4-Trichlorobenzene | ug/kg | | | | < 5.1 | 5.1 | U | 1.0 | < 250 | 250 | U | 50 | < 330 | 330 | U | 65 | | | | | | | | | < 290 | 290 | U | 57 | < 6.3 | 6.3 | U | 1.3 |
| 1,2-Dibromo-3-chloropropane | ug/kg | | | | < 5.1 | 5.1 | U | 1.0 | < 250 | 250 | U | 50 | < 330 | 330 | U | 65 | | | | | | | | | < 290 | 290 | U | 57 | < 6.3 | 6.3 | U | 1.3 |
| 1,2-Dibromoethane | ug/kg | | | | < 5.1 | 5.1 | U | 0.51 | < 5.0 | 5.0 | U | 0.50 | < 3.8 | 3.8 | U | 0.38 | | | | | | | | | < 6.7 | 6.7 | U | 0.67 | < 6.3 | 6.3 | U | 0.63 |
| 1,2-Dichlorobenzene | ug/kg | 100,000 | 100,000 | 1,100 | < 5.1 | 5.1 | U | 0.51 | < 250 | 250 | U | 25 | < 330 | 330 | U | 33 | | | | | | | | | < 290 | 290 | U | 29 | < 6.3 | 6.3 | U | 0.63 |
| 1,2-Dichloroethane | ug/kg | 2,300 | 3,100 | 20 | < 5.1 | 5.1 | U | 0.51 | < 5.0 | 5.0 | U | 0.50 | < 3.8 | 3.8 | U | 0.38 | | | | | | | | | < 6.7 | 6.7 | U | 0.67 | < 6.3 | 6.3 | U | 0.63 |
| 1,2-Dichloropropane | ug/kg | | | | < 5.1 | 5.1 | U | 1.0 | < 5.0 | 5.0 | U | 1.0 | < 3.8 | 3.8 | U | 0.75 | | | | | | | | | < 6.7 | 6.7 | U | 1.3 | < 6.3 | 6.3 | U | 1.3 |
| 1,3-Dichlorobenzene | ug/kg | 17,000 | 49,000 | 2,400 | < 5.1 | 5.1 | U | 0.51 | < 250 | 250 | U | 25 | < 330 | 330 | U | 33 | | | | | | | | | < 290 | 290 | U | 29 | < 6.3 | 6.3 | U | 0.63 |
| 1,4-Dichlorobenzene | ug/kg | 9,800 | 13,000 | 1,800 | < 5.1 | 5.1 | U | 0.51 | < 250 | 250 | U | 25 | < 330 | 330 | U | 33 | | | | | | | | | < 290 | 290 | U | 29 | < 6.3 | 6.3 | U | 0.63 |
| 2-Hexanone | ug/kg | | | | < 26 | 26 | U | 5.1 | < 25 | 25 | U | 5.0 | < 19 | 19 | U | 3.8 | | | | | | | | | < 33 | 33 | U | 6.7 | < 32 | 32 | U | 6.3 |
| 4-Methyl-2-pentanone | ug/kg | | | | < 26 | 26 | U | 5.1 | < 25 | 25 | U | 5.0 | < 19 | 19 | U | 3.8 | | | | | | | | | < 33 | 33 | U | 6.7 | < 32 | 32 | U | 6.3 |
| Acetone | ug/kg | 100,000 | 100,000 | 50 | 52 | 51 | S | 5.1 | 80 | 50 | S | 5.0 | 46 | 38 | S | 3.8 | | | | | | | | | 43 | 67 | JS | 6.7 | 20 | 63 | JS | 6.3 |
| Benzene | ug/kg | 2,900 | 4,800 | 60 | < 5.1 | 5.1 | U | 0.51 | < 5.0 | 5.0 | U | 0.50 | < 3.8 | 3.8 | U | 0.38 | | | | | | | | | < 6.7 | 6.7 | U | 0.67 | < 6.3 | 6.3 | U | 0.63 |
| Bromochloromethane | ug/kg | | | | < 5.1 | 5.1 | U | 0.51 | < 5.0 | 5.0 | U | 0.50 | < 3.8 | 3.8 | U | 0.38 | | | | | | | | | < 6.7 | 6.7 | U | 0.67 | < 6.3 | 6.3 | U | 0.63 |
| Bromodichloromethane | ug/kg | | | | < 5.1 | 5.1 | U | 1.0 | < 5.0 | 5.0 | U | 1.0 | < 3.8 | 3.8 | U | 0.75 | | | | | | | | | < 6.7 | 6.7 | U | 1.3 | < 6.3 | 6.3 | U | 1.3 |
| Bromoform | ug/kg | | | | < 5.1 | 5.1 | U | 1.0 | < 5.0 | 5.0 | U | 1.0 | < 3.8 | 3.8 | U | 0.75 | | | | | | | | | < 6.7 | 6.7 | U | 1.3 | < 6.3 | 6.3 | U | 1.3 |
| Bromomethane | ug/kg | | | | < 5.1 | 5.1 | U | 2.0 | < 5.0 | 5.0 | U | 2.0 | < 3.8 | 3.8 | U | 1.5 | | | | | | | | | < 6.7 | 6.7 | U | 2.7 | < 6.3 | 6.3 | U | 2.5 |
| Carbon Disulfide | ug/kg | | | | 1.3 | 5.1 | J | 1.0 | < 5.0 | 5.0 | U | 1.0 | < 3.8 | 3.8 | U | 0.75 | | | | | | | | | < 6.7 | 6.7 | U | 1.3 | < 6.3 | 6.3 | U | 1.3 |
| Carbon tetrachloride | ug/kg | 1,400 | 2,400 | 760 | < 5.1 | 5.1 | U | 1.0 | < 5.0 | 5.0 | U | 1.0 | < 3.8 | 3.8 | U | 0.75 | | | | | | | | | < 6.7 | 6.7 | U | 1.3 | < 6.3 | 6.3 | U | 1.3 |
| Chlorobenzene | ug/kg | 100,000 | 100,000 | 1,100 | < 5.1 | 5.1 | U | 0.51 | < 5.0 | 5.0 | U | 0.50 | < 3.8 | 3.8 | U | 0.38 | | | | | | | | | < 6.7 | 6.7 | U | 0.67 | < 6.3 | 6.3 | U | 0.63 |
| Chloroethane | ug/kg | | | | < 5.1 | 5.1 | U | 0.51 | < 5.0 | 5.0 | U | 0.50 | < 3.8 | 3.8 | U | 0.38 | | | | | | | | | < 6.7 | 6.7 | U | 0.67 | < 6.3 | 6.3 | U | 0.63 |
| Chloroform | ug/kg | 10,000 | 49,000 | 370 | < 5.1 | 5.1 | U | 0.51 | < 5.0 | 5.0 | U | 0.50 | < 3.8 | 3.8 | U | 0.38 | | | | | | | | | < 6.7 | 6.7 | U | 0.67 | < 6.3 | 6.3 | U | 0.63 |
| Chloromethane | ug/kg | | | | < 5.1 | 5.1 | U | 1.0 | < 5.0 | 5.0 | U | 1.0 | < 3.8 | 3.8 | U | 0.75 | | | | | | | | | < 6.7 | 6.7 | U | 1.3 | < 6.3 | 6.3 | U | 1.3 |
| cis-1,2-Dichloroethene | ug/kg | 59,000 | 100,000 | 250 | < 5.1 | 5.1 | U | 0.51 | < 5.0 | 5.0 | U | 0.50 | < 3.8 | 3.8 | U | 0.38 | | | | | | | | | < 6.7 | 6.7 | U | 0.67 | < 6.3 | 6.3 | U | 0.63 |
| cis-1,3-Dichloropropene | ug/kg | | | | < 5.1 | 5.1 | U | 0.51 | < 5.0 | 5.0 | U | 0.50 | < 3.8 | 3.8 | U | 0.38 | | | | | | | | | < 6.7 | 6.7 | U | 0.67 | < 6.3 | 6.3 | U | 0.63 |
| Cyclohexane | ug/kg | | | | < 5.1 | 5.1 | U | 1.0 | < 5.0 | 5.0 | U | 1.0 | < 3.8 | 3.8 | U | 0.75 | | | | | | | | | < 6.7 | 6.7 | U | 1.3 | < 6.3 | 6.3 | U | 1.3 |
| Dibromochloromethane | ug/kg | | | | < 5.1 | 5.1 | U | 1.0 | < 5.0 | 5.0 | U | 1.0 | < 3.8 | 3.8 | U | 0.75 | | | | | | | | | < 6.7 | 6.7 | U | 1.3 | < 6.3 | 6.3 | U | 1.3 |
| Dichlorodifluoromethane | ug/kg | | | | < 5.1 | 5.1 | U | 0.51 | < 5.0 | 5.0 | U | 0.50 | < 3.8 | 3.8 | U | 0.38 | | | | | | | | | < 6.7 | 6.7 | U | 0.67 | 8 | 6.3 | | 0.63 |
| Ethylbenzene | ug/kg | 30,000 | 41,000 | 1,000 | < 5.1 | 5.1 | U | 0.51 | < 5.0 | 5.0 | U | 0.50 | < 3.8 | 3.8 | U | 0.38 | | | | | | | | | 140 | 290 | J | 29 | < 6.3 | 6.3 | U | 0.63 |
| Isopropylbenzene | ug/kg | | | | < 5.1 | 5.1 | U | 0.51 | < 250 | 250 | U | 25 | < 330 | 330 | U | 33 | | | | | | | | | < 290 | 290 | U | 29 | < 6.3 | 6.3 | U | 0.63 |
| m&p-Xylene | ug/kg | | | | < 5.1 | 5.1 | U | 1.0 | < 5.0 | 5.0 | U | 1.0 | < 3.8 | 3.8 | U | 0.75 | | | | | | | | | 290 | 290 | | 57 | 91 | 290 | J | 57 |
| Methyl ethyl ketone | ug/kg | 100,000 | 100,000 | 120 | 11 | 31 | J | 5.1 | 20 | 30 | J | 5.0 | 12 | 23 | J | 3.8 | | | | | | | | | < 40 | 40 | U | 6.7 | < 38 | 38 | U | 6.3 |
| Methyl t-butyl ether (MTBE) | ug/kg | 62,000 | 100,000 | 930 | < 10 | 10 | U | 1.0 | < 10 | 10 | U | 1.0 | < 7.5 | 7.5 | U | 0.75 | | | | | | | | | < 13 | 13 | U | 1.3 | < 13 | 13 | U | 1.3 |
| Methylacetate | ug/kg | | | | < 5.1 | 5.1 | U | 2.6 | < 5.0 | 5.0 | U | 2.5 | < 3.8 | 3.8 | U | 1.9 | | | | | | | | | < 6.7 | 6.7 | U | 3.3 | < 6.3 | 6.3 | U | 3.2 |
| Methylcyclohexane | ug/kg | | | | < 5.1 | 5.1 | U | 1.0 | < 5.0 | 5.0 | U | 1.0 | < 3.8 | 3.8 | U | 0.75 | | | | | | | | | < 6.7 | 6.7 | U | 1.3 | < 6.3 | 6.3 | U | 1.3 |
| Methylene chloride | ug/kg | 51,000 | 100,000 | 50 | < 5.1 | 5.1 | U | 5.1 | < 5.0 | 5.0 | U | 5.0 | < 3.8 | 3.8 | U | 3.8 | | | | | | | | | < 6.7 | 6.7 | U | 6.7 | < 6.3 | 6.3 | U | 6.3 |
| o-Xylene | ug/kg | | | | < 5.1 | 5.1 | U | 1.0 | < 5.0 | 5.0 | U | 1.0 | < 3.8 | 3.8 | U | 0.75 | | | | | | | | | 92 | 290 | J | 57 | < 6.3 | 6.3 | U | 1.3 |
| Styrene | ug/kg | | | | < 5.1 | 5.1 | U | 0.51 | < 5.0 | 5.0 | U | 0.50 | < 3.8 | 3.8 | U | 0.38 | | | | | | | | | < 6.7 | 6.7 | U | 0.67 | < 6.3 | 6.3 | U | 0.63 |
| Tetrachloroethene | ug/kg | 5,500 | 19,000 | 1,300 | < 5.1 | 5.1 | U | 1.0 | < 5.0 | 5.0 | U | 1.0 | < 3.8 | 3.8 | U | 0.75 | | | | | | | | | < 6.7 | 6.7 | U | 1.3 | < 6.3 | 6.3 | U | 1.3 |
| Toluene | ug/kg | 100,000 | 100,000 | 700 | < 5.1 | 5.1 | U | 0.51 | < 5.0 | 5.0 | U | 0.50 | < 3.8 | 3.8 | U | 0.38 | | | | | | | | | 49 | 290 | J | 29 | < 6.3 | 6.3 | U | 0.63 |
| Total Xylenes | ug/kg | | 100,000 | 260 | < 5.1 | 5.1 | U | 1.0 | < 5.0 | 5.0 | U | 1.0 | < 3.8 | 3.8 | U | 0.75 | | | | | | | | | 382 | 290 | | 57 | < 290 | 290 | U | 57 |
| trans-1,2-Dichloroethene | ug/kg | 100,000 | 100,000 | 190 | < 5.1 | 5.1 | U | 0.51 | < 5.0 | 5.0 | U | 0.50 | < 3.8 | 3.8 | U | 0.38 | | | | | | | | | < 6.7 | 6.7 | U | 0.67 | < 6.3 | 6.3 | U | 0.63 |
| trans-1,3-Dichloropropene | ug/kg | | | | < 5.1 | 5.1 | U | 0.51 | < 5.0 | 5.0 | U | 0.50 | < 3.8 | 3.8 | U | 0.38 | | | | | | | | | < 6.7 | 6.7 | U | 0.67 | < 6.3 | 6.3 | U | 0.63 |
| Trichloroethene | ug/kg | 10,000 | 21,000 | 470 | < 5.1 | 5.1 | U | 0.51 | < 5.0 | 5.0 | U | 0.50 | < 3.8 | 3.8 | U | 0.38 | | | | | | | | | < 6.7 | 6.7 | U | 0.67 | < 6.3 | 6.3 | U | 0.63 |
| Trichlorofluoromethane | ug/kg | | | | < 5.1 | 5.1 | U | 1.0 | < 5.0 | 5.0 | U | 1.0 | < 3.8 | 3.8 | U | 0.75 | | | | | | | | | < 6.7 | 6.7 | U | 1.3 | < 6.3 | 6.3 | U | 1.3 |
| Trichlorotrifluoroethane | ug/kg | | | | < 5.1 | 5.1 | U | 0.51 | < 5.0 | 5.0 | U | 0.50 | < 3.8 | 3.8 | U | 0.38 | | | | | | | | | < 6.7 | 6.7 | U | 0.67 | < 6.3 | 6.3 | U | 0.63 |

**TABLE 5A**
**SUBSURFACE SOIL LABORATORY ANALYTICAL RESULTS SUMMARY**

**REMEDIAL INVESTIGATION**
**109-125 MARBLEDALE ROAD**
**TUCKAHOE, NEW YORK**
**BCP # C360143**

| Analyte | Lab Sample Id<br>Collection Date<br>Client Id<br>Matrix | | | | BJ03572<br>4/15/2015<br>TB-1 (10-12)<br>Solid | | | | BJ03573<br>4/15/2015<br>TB-1 (20-22)<br>Solid | | | | BJ03574<br>4/15/2015<br>TB-101 (20-22)<br>Solid | | | | BJ03575<br>4/15/2015<br>TB-1 (14-22)<br>Solid | | | | BJ03576<br>4/15/2015<br>TB-101 (14-22)<br>Solid | | | | BJ03570<br>4/15/2015<br>TB-2 (2-4)<br>Solid | | | | BJ03571<br>4/15/2015<br>TB-2 (18-20)<br>Solid | | | |
|---|---|---|---|---|---|---|---|---|---|---|---|---|---|---|---|---|---|---|---|---|---|---|---|---|---|---|---|---|---|---|---|---|
| | Units | NY-Res. | NY-ResRestrict | NY-UnRestricted | Result | RL | Qual | MDL | Result | RL | Qual | MDL | Result | RL | Qual | MDL | Result | RL | Qual | MDL | Result | RL | Qual | MDL | Result | RL | Qual | MDL | Result | RL | Qual | MDL |
| Vinyl chloride | ug/kg | 210 | 900 | 20 | < 5.1 | 5.1 | U | 0.51 | < 5.0 | 5.0 | U | 0.50 | < 3.8 | 3.8 | U | 0.38 | | | | | | | | | < 6.7 | 6.7 | U | 0.67 | < 6.3 | 6.3 | U | 0.63 |
| **1,4-dioxane By SW8260C** | | | | | | | | | | | | | | | | | | | | | | | | | | | | | | | | |
| 1,4-dioxane | ug/kg | 9,800 | 13,000 | 100 | < 100 | 100 | U | 41 | < 100 | 100 | U | 40 | < 75 | 75 | U | 30 | | | | | | | | | < 130 | 130 | U | 53 | < 130 | 130 | U | 51 |
| **Semivolatiles By SW8270D** | | | | | | | | | | | | | | | | | | | | | | | | | | | | | | | | |
| 1,1-Biphenyl | ug/Kg | | | | < 270 | 270 | U | 120 | | | | | | | | | < 280 | 280 | U | 120 | < 280 | 280 | U | 120 | < 6400 | 6,400 | U | 2800 | < 260 | 260 | U | 120 |
| 1,2,4,5-Tetrachlorobenzene | ug/Kg | | | | < 270 | 270 | U | 140 | | | | | | | | | < 280 | 280 | U | 140 | < 280 | 280 | U | 140 | < 6400 | 6,400 | U | 3200 | < 260 | 260 | U | 130 |
| 2,3,4,6-tetrachlorophenol | ug/Kg | | | | < 270 | 270 | U | 180 | | | | | | | | | < 280 | 280 | U | 190 | < 280 | 280 | U | 190 | < 6400 | 6,400 | U | 4300 | < 260 | 260 | U | 180 |
| 2,4,5-Trichlorophenol | ug/Kg | | | | < 270 | 270 | U | 210 | | | | | | | | | < 280 | 280 | U | 220 | < 280 | 280 | U | 220 | < 6400 | 6,400 | U | 5000 | < 260 | 260 | U | 210 |
| 2,4,6-Trichlorophenol | ug/Kg | | | | < 150 | 150 | U | 120 | | | | | | | | | < 160 | 160 | U | 130 | < 160 | 160 | U | 130 | < 3700 | 3,700 | U | 2900 | < 150 | 150 | U | 120 |
| 2,4-Dichlorophenol | ug/Kg | | | | < 150 | 150 | U | 140 | | | | | | | | | < 160 | 160 | U | 140 | < 160 | 160 | U | 140 | < 3700 | 3,700 | U | 3200 | < 150 | 150 | U | 130 |
| 2,4-Dimethylphenol | ug/Kg | | | | < 270 | 270 | U | 96 | | | | | | | | | < 280 | 280 | U | 100 | < 280 | 280 | U | 100 | < 6400 | 6,400 | U | 2300 | < 260 | 260 | U | 94 |
| 2,4-Dinitrophenol | ug/Kg | | | | < 270 | 270 | U | 270 | | | | | | | | | < 280 | 280 | U | 280 | < 280 | 280 | U | 280 | < 6400 | 6,400 | U | 6400 | < 260 | 260 | U | 260 |
| 2,4-Dinitrotoluene | ug/Kg | | | | < 150 | 150 | U | 150 | | | | | | | | | < 160 | 160 | U | 160 | < 160 | 160 | U | 160 | < 3700 | 3,700 | U | 3600 | < 150 | 150 | U | 150 |
| 2,6-Dinitrotoluene | ug/Kg | | | | < 150 | 150 | U | 120 | | | | | | | | | < 160 | 160 | U | 130 | < 160 | 160 | U | 130 | < 3700 | 3,700 | U | 2900 | < 150 | 150 | U | 120 |
| 2-Chloronaphthalene | ug/Kg | | | | < 270 | 270 | U | 110 | | | | | | | | | < 280 | 280 | U | 120 | < 280 | 280 | U | 110 | < 6400 | 6,400 | U | 2600 | < 260 | 260 | U | 110 |
| 2-Chlorophenol | ug/Kg | | | | < 270 | 270 | U | 110 | | | | | | | | | < 280 | 280 | U | 120 | < 280 | 280 | U | 110 | < 6400 | 6,400 | U | 2600 | < 260 | 260 | U | 110 |
| 2-Methylnaphthalene | ug/Kg | | | | < 270 | 270 | U | 110 | | | | | | | | | 170 | 280 | J | 120 | 220 | 280 | J | 120 | < 6400 | 6,400 | U | 2700 | < 260 | 260 | U | 110 |
| 2-Methylphenol (o-cresol) | ug/Kg | 100,000 | 100,000 | 330 | < 270 | 270 | U | 180 | | | | | | | | | < 280 | 280 | U | 190 | < 280 | 280 | U | 190 | < 6400 | 6400 | U | 4300 | < 260 | 260 | U | 180 |
| 2-Nitroaniline | ug/Kg | | | | < 1900 | 1,900 | U | 390 | | | | | | | | | < 2000 | 2,000 | U | 410 | < 2000 | 2,000 | U | 410 | < 46000 | 46,000 | U | 9200 | < 1900 | 1,900 | U | 380 |
| 2-Nitrophenol | ug/Kg | | | | < 270 | 270 | U | 240 | | | | | | | | | < 280 | 280 | U | 260 | < 280 | 280 | U | 250 | < 6400 | 6,400 | U | 5800 | < 260 | 260 | U | 240 |
| 3&4-Methylphenol (m&p-cresol) | ug/Kg | | | | < 270 | 270 | U | 150 | | | | | | | | | 420 | 280 | | 160 | 880 | 280 | | 160 | < 6400 | 6,400 | U | 3600 | 740 | 260 | | 150 |
| 3,3'-Dichlorobenzidine | ug/Kg | | | | < 150 | 150 | U | 150 | | | | | | | | | < 160 | 160 | U | 160 | < 160 | 160 | U | 160 | < 3700 | 3,700 | U | 3700 | < 150 | 150 | U | 150 |
| 3-Nitroaniline | ug/Kg | | | | < 1900 | 1,900 | U | 840 | | | | | | | | | < 2000 | 2,000 | U | 880 | < 2000 | 2,000 | U | 870 | < 46000 | 46,000 | U | 20000 | < 1900 | 1,900 | U | 820 |
| 4,6-Dinitro-2-methylphenol | ug/Kg | | | | < 270 | 270 | U | 270 | | | | | | | | | < 280 | 280 | U | 280 | < 280 | 280 | U | 280 | < 6400 | 6,400 | U | 6400 | < 260 | 260 | U | 260 |
| 4-Bromophenyl phenyl ether | ug/Kg | | | | < 270 | 270 | U | 110 | | | | | | | | | < 280 | 280 | U | 120 | < 280 | 280 | U | 120 | < 6400 | 6,400 | U | 2700 | < 260 | 260 | U | 110 |
| 4-Chloro-3-methylphenol | ug/Kg | | | | < 270 | 270 | U | 140 | | | | | | | | | < 280 | 280 | U | 140 | < 280 | 280 | U | 140 | < 6400 | 6,400 | U | 3200 | < 260 | 260 | U | 130 |
| 4-Chloroaniline | ug/Kg | | | | < 770 | 770 | U | 180 | | | | | | | | | < 810 | 810 | U | 190 | < 800 | 800 | U | 190 | < 18000 | 18,000 | U | 4300 | < 750 | 750 | U | 180 |
| 4-Chlorophenyl phenyl ether | ug/Kg | | | | < 270 | 270 | U | 130 | | | | | | | | | < 280 | 280 | U | 140 | < 280 | 280 | U | 130 | < 6400 | 6,400 | U | 3100 | < 260 | 260 | U | 130 |
| 4-Nitroaniline | ug/Kg | | | | < 1900 | 1,900 | U | 130 | | | | | | | | | < 2000 | 2,000 | U | 140 | < 2000 | 2,000 | U | 130 | < 46000 | 46,000 | U | 3100 | < 1900 | 1,900 | U | 130 |
| 4-Nitrophenol | ug/Kg | | | | < 270 | 270 | U | 170 | | | | | | | | | < 280 | 280 | U | 180 | < 280 | 280 | U | 180 | < 6400 | 6,400 | U | 4100 | < 260 | 260 | U | 170 |
| Acenaphthene | ug/Kg | 100,000 | 100,000 | 20,000 | < 270 | 270 | U | 120 | | | | | | | | | < 280 | 280 | U | 120 | < 280 | 280 | U | 120 | < 6400 | 6,400 | U | 2800 | < 260 | 260 | U | 110 |
| Acenaphthylene | ug/Kg | 100,000 | 100,000 | 100,000 | < 150 | 150 | U | 110 | | | | | | | | | < 160 | 160 | U | 110 | < 160 | 160 | U | 110 | < 3700 | 3,700 | U | 2600 | < 150 | 150 | U | 110 |
| Acetophenone | ug/Kg | | | | < 270 | 270 | U | 120 | | | | | | | | | < 280 | 280 | U | 130 | < 280 | 280 | U | 130 | < 6400 | 6,400 | U | 2900 | < 260 | 260 | U | 120 |
| Anthracene | ug/Kg | 100,000 | 100,000 | 100,000 | < 270 | 270 | U | 130 | | | | | | | | | < 280 | 280 | U | 130 | < 280 | 280 | U | 130 | < 6400 | 6,400 | U | 3000 | < 260 | 260 | U | 120 |
| Atrazine | ug/Kg | | | | < 150 | 150 | U | 150 | | | | | | | | | < 160 | 160 | U | 160 | < 160 | 160 | U | 160 | < 3700 | 3,700 | U | 3700 | < 150 | 150 | U | 150 |
| Benz(a)anthracene | ug/Kg | 1,000 | 1,000 | 1,000 | < 270 | 270 | U | 130 | | | | | | | | | 540 | 280 | | 140 | 570 | 280 | | 130 | < 6400 | 6,400 | U | 3100 | < 260 | 260 | U | 130 |
| Benzaldehyde | ug/Kg | | | | < 270 | 270 | U | 110 | | | | | | | | | < 280 | 280 | U | 120 | < 280 | 280 | U | 120 | < 6400 | 6,400 | U | 2700 | < 260 | 260 | U | 110 |
| Benzo(a)pyrene | ug/Kg | 1,000 | 1,000 | 1,000 | < 150 | 150 | U | 130 | | | | | | | | | 430 | 160 | | 130 | 470 | 160 | | 130 | < 3700 | 3,700 | U | 3000 | < 150 | 150 | U | 120 |
| Benzo(b)fluoranthene | ug/Kg | 1,000 | 1,000 | 1,000 | < 270 | 270 | U | 130 | | | | | | | | | 570 | 280 | | 140 | 630 | 280 | | 140 | < 6400 | 6,400 | U | 3100 | < 260 | 260 | U | 130 |
| Benzo(ghi)perylene | ug/Kg | 100,000 | 100,000 | 100,000 | < 270 | 270 | U | 120 | | | | | | | | | 140 | 280 | J | 130 | 170 | 280 | J | 130 | < 6400 | 6,400 | U | 3000 | < 260 | 260 | U | 120 |
| Benzo(k)fluoranthene | ug/Kg | 1,000 | 3,900 | 800 | < 270 | 270 | U | 130 | | | | | | | | | 250 | 280 | J | 130 | 240 | 280 | J | 130 | < 6400 | 6,400 | U | 3000 | < 260 | 260 | U | 130 |
| Benzyl butyl phthalate | ug/Kg | | | | < 270 | 270 | U | 100 | | | | | | | | | < 280 | 280 | U | 100 | < 280 | 280 | U | 100 | < 6400 | 6,400 | U | 2400 | < 260 | 260 | U | 97 |
| Bis(2-chloroethoxy)methane | ug/Kg | | | | < 270 | 270 | U | 110 | | | | | | | | | < 280 | 280 | U | 110 | < 280 | 280 | U | 110 | < 6400 | 6,400 | U | 2500 | < 260 | 260 | U | 100 |
| Bis(2-chloroethyl)ether | ug/Kg | | | | < 150 | 150 | U | 100 | | | | | | | | | < 160 | 160 | U | 110 | < 160 | 160 | U | 110 | < 3700 | 3,700 | U | 2500 | < 150 | 150 | U | 100 |
| Bis(2-chloroisopropyl)ether | ug/Kg | | | | < 270 | 270 | U | 110 | | | | | | | | | < 280 | 280 | U | 110 | < 280 | 280 | U | 110 | < 6400 | 6,400 | U | 2500 | < 260 | 260 | U | 100 |
| Bis(2-ethylhexyl)phthalate | ug/Kg | | | | < 270 | 270 | U | 110 | | | | | | | | | 240 | 280 | J | 120 | 7,600 | 1,400 | | 580 | 32,000 | 6,400 | | 2600 | 560 | 260 | | 110 |
| Caprolactam | ug/Kg | | | | < 270 | 270 | U | 270 | | | | | | | | | < 280 | 280 | U | 280 | < 280 | 280 | U | 280 | < 6400 | 6,400 | U | 6400 | < 260 | 260 | U | 260 |
| Carbazole | ug/Kg | | | | < 1900 | 1,900 | U | 290 | | | | | | | | | < 2000 | 2,000 | U | 310 | < 2000 | 2,000 | U | 300 | < 46000 | 46,000 | U | 6900 | < 1900 | 1,900 | U | 290 |
| Chrysene | ug/Kg | 1,000 | 3,900 | 1,000 | < 270 | 270 | U | 130 | | | | | | | | | 470 | 280 | | 140 | 470 | 280 | | 130 | < 6400 | 6,400 | U | 3100 | < 260 | 260 | U | 130 |
| Dibenz(a,h)anthracene | ug/Kg | 330 | 330 | 330 | < 150 | 150 | U | 120 | | | | | | | | | < 160 | 160 | U | 130 | < 160 | 160 | U | 130 | < 3700 | 3,700 | U | 3000 | < 150 | 150 | U | 120 |
| Dibenzofuran | ug/Kg | | | 7,000 | < 270 | 270 | U | 110 | | | | | | | | | < 280 | 280 | U | 120 | < 280 | 280 | U | 120 | < 6400 | 6,400 | U | 2700 | < 260 | 260 | U | 110 |

**TABLE 5A**
**SUBSURFACE SOIL LABORATORY ANALYTICAL RESULTS SUMMARY**

**REMEDIAL INVESTIGATION**
**109-125 MARBLEDALE ROAD**
**TUCKAHOE, NEW YORK**
**BCP # C360143**

| Analyte | Lab Sample Id<br>Collection Date<br>Client Id<br>Matrix | | | | BJ03572<br>4/15/2015<br>TB-1 (10-12)<br>Solid | | | | BJ03573<br>4/15/2015<br>TB-1 (20-22)<br>Solid | | | | BJ03574<br>4/15/2015<br>TB-101 (20-22)<br>Solid | | | | BJ03575<br>4/15/2015<br>TB-1 (14-22)<br>Solid | | | | BJ03576<br>4/15/2015<br>TB-101 (14-22)<br>Solid | | | | BJ03570<br>4/15/2015<br>TB-2 (2-4)<br>Solid | | | | BJ03571<br>4/15/2015<br>TB-2 (18-20)<br>Solid | | | |
|---|---|---|---|---|---|---|---|---|---|---|---|---|---|---|---|---|---|---|---|---|---|---|---|---|---|---|---|---|---|---|---|---|
| | Units | NY-Res. | NY-ResRestrict | NY-UnRestricted | Result | RL | Qual | MDL | Result | RL | Qual | MDL | Result | RL | Qual | MDL | Result | RL | Qual | MDL | Result | RL | Qual | MDL | Result | RL | Qual | MDL | Result | RL | Qual | MDL |
| Diethyl phthalate | ug/Kg | | | | < 270 | 270 | U | 120 | | | | | | | | | < 280 | 280 | U | 130 | < 280 | 280 | U | 130 | < 6400 | 6,400 | U | 2900 | < 260 | 260 | U | 120 |
| Dimethylphthalate | ug/Kg | | | | < 270 | 270 | U | 120 | | | | | | | | | < 280 | 280 | U | 130 | < 280 | 280 | U | 120 | < 6400 | 6,400 | U | 2800 | < 260 | 260 | U | 120 |
| Di-n-butylphthalate | ug/Kg | | | | < 270 | 270 | U | 100 | | | | | | | | | < 280 | 280 | U | 110 | < 280 | 280 | U | 110 | < 6400 | 6,400 | U | 2400 | < 260 | 260 | U | 100 |
| Di-n-octylphthalate | ug/Kg | | | | < 270 | 270 | U | 100 | | | | | | | | | < 280 | 280 | U | 100 | < 280 | 280 | U | 100 | < 6400 | 6,400 | U | 2400 | < 260 | 260 | U | 97 |
| Fluoranthene | ug/Kg | 100,000 | 100,000 | 100,000 | < 270 | 270 | U | 120 | | | | | | | | | 930 | 280 | | 130 | 990 | 280 | | 130 | < 6400 | 6,400 | U | 3000 | < 260 | 260 | U | 120 |
| Fluorene | ug/Kg | 100,000 | 100,000 | 30,000 | < 270 | 270 | U | 130 | | | | | | | | | 310 | 280 | | 130 | 140 | 280 | J | 130 | < 6400 | 6,400 | U | 3000 | < 260 | 260 | U | 120 |
| Hexachlorobenzene | ug/Kg | | | | < 150 | 150 | U | 110 | | | | | | | | | < 160 | 160 | U | 120 | < 160 | 160 | U | 120 | < 3700 | 3,700 | U | 2700 | < 150 | 150 | U | 110 |
| Hexachlorobutadiene | ug/Kg | | | | < 270 | 270 | U | 140 | | | | | | | | | < 280 | 280 | U | 150 | < 280 | 280 | U | 150 | < 6400 | 6,400 | U | 3300 | < 260 | 260 | U | 140 |
| Hexachlorocyclopentadiene | ug/Kg | | | | < 270 | 270 | U | 120 | | | | | | | | | < 280 | 280 | U | 120 | < 280 | 280 | U | 120 | < 6400 | 6,400 | U | 2800 | < 260 | 260 | U | 120 |
| Hexachloroethane | ug/Kg | | | | < 150 | 150 | U | 120 | | | | | | | | | < 160 | 160 | U | 120 | < 160 | 160 | U | 120 | < 3700 | 3,700 | U | 2700 | < 150 | 150 | U | 110 |
| Indeno(1,2,3-cd)pyrene | ug/Kg | 500 | 500 | 500 | < 270 | 270 | U | 130 | | | | | | | | | 140 | 280 | J | 130 | 160 | 280 | J | 130 | < 6400 | 6,400 | U | 3000 | < 260 | 260 | U | 130 |
| Isophorone | ug/Kg | | | | < 150 | 150 | U | 110 | | | | | | | | | < 160 | 160 | U | 110 | < 160 | 160 | U | 110 | < 3700 | 3,700 | U | 2600 | < 150 | 150 | U | 110 |
| Naphthalene | ug/Kg | 100,000 | 100,000 | 12,000 | < 270 | 270 | U | 110 | | | | | | | | | < 280 | 280 | U | 120 | < 280 | 280 | U | 120 | < 6400 | 6,400 | U | 2600 | < 260 | 260 | U | 110 |
| Nitrobenzene | ug/Kg | | | | < 150 | 150 | U | 140 | | | | | | | | | < 160 | 160 | U | 140 | < 160 | 160 | U | 140 | < 3700 | 3,700 | U | 3200 | < 150 | 150 | U | 130 |
| N-Nitrosodimethylamine | ug/Kg | | | | < 270 | 270 | U | 110 | | | | | | | | | < 280 | 280 | U | 110 | < 280 | 280 | U | 110 | < 6400 | 6,400 | U | 2600 | < 260 | 260 | U | 110 |
| N-Nitrosodi-n-propylamine | ug/Kg | | | | < 150 | 150 | U | 120 | | | | | | | | | < 160 | 160 | U | 130 | < 160 | 160 | U | 130 | < 3700 | 3,700 | U | 3000 | < 150 | 150 | U | 120 |
| N-Nitrosodiphenylamine | ug/Kg | | | | < 150 | 150 | U | 150 | | | | | | | | | < 160 | 160 | U | 160 | < 160 | 160 | U | 150 | < 3700 | 3,700 | U | 3500 | < 150 | 150 | U | 140 |
| Pentachlorophenol | ug/Kg | 2,400 | 6,700 | 800 | < 270 | 270 | U | 150 | | | | | | | | | < 280 | 280 | U | 150 | < 280 | 280 | U | 150 | < 6400 | 6,400 | U | 3500 | < 260 | 260 | U | 140 |
| Phenanthrene | ug/Kg | 100,000 | 100,000 | 100,000 | < 150 | 150 | U | 110 | | | | | | | | | 380 | 160 | | 120 | 220 | 160 | | 110 | < 3700 | 3,700 | U | 2600 | < 150 | 150 | U | 110 |
| Phenol | ug/Kg | 100,000 | 100,000 | 330 | < 270 | 270 | U | 120 | | | | | | | | | < 280 | 280 | U | 130 | < 280 | 280 | U | 130 | < 6400 | 6,400 | U | 2900 | < 260 | 260 | U | 120 |
| Pyrene | ug/Kg | 100,000 | 100,000 | 100,000 | < 270 | 270 | U | 130 | | | | | | | | | 780 | 280 | | 140 | 810 | 280 | | 140 | < 6400 | 6,400 | U | 3100 | < 260 | 260 | U | 130 |
| **PCBs By SW8082A** | | | | | | | | | | | | | | | | | | | | | | | | | | | | | | | | |
| PCB-1016 | ug/Kg | 1,000 | | 100 | < 96 | 96 | U | 96 | | | | | | | | | < 100 | 100 | U | 100 | < 100 | 100 | U | 100 | < 91 | 91 | U | 91 | < 95 | 95 | U | 95 |
| PCB-1221 | ug/Kg | 1,000 | | 100 | < 96 | 96 | U | 96 | | | | | | | | | < 100 | 100 | U | 100 | < 100 | 100 | U | 100 | < 91 | 91 | U | 91 | < 95 | 95 | U | 95 |
| PCB-1232 | ug/Kg | 1,000 | | 100 | < 96 | 96 | U | 96 | | | | | | | | | < 100 | 100 | U | 100 | < 100 | 100 | U | 100 | < 91 | 91 | U | 91 | < 95 | 95 | U | 95 |
| PCB-1242 | ug/Kg | 1,000 | | 100 | < 96 | 96 | U | 96 | | | | | | | | | < 100 | 100 | U | 100 | < 100 | 100 | U | 100 | < 91 | 91 | U | 91 | < 95 | 95 | U | 95 |
| PCB-1248 | ug/Kg | 1,000 | | 100 | < 96 | 96 | U | 96 | | | | | | | | | < 100 | 100 | U | 100 | < 100 | 100 | U | 100 | < 91 | 91 | U | 91 | < 95 | 95 | U | 95 |
| PCB-1254 | ug/Kg | 1,000 | | 100 | < 96 | 96 | U | 96 | | | | | | | | | < 100 | 100 | U | 100 | < 100 | 100 | U | 100 | < 91 | 91 | U | 91 | < 95 | 95 | U | 95 |
| PCB-1260 | ug/Kg | 1,000 | | 100 | < 96 | 96 | U | 96 | | | | | | | | | < 100 | 100 | U | 100 | < 100 | 100 | U | 100 | < 91 | 91 | U | 91 | < 95 | 95 | U | 95 |
| PCB-1262 | ug/Kg | | | | < 96 | 96 | U | 96 | | | | | | | | | < 100 | 100 | U | 100 | < 100 | 100 | U | 100 | < 91 | 91 | U | 91 | < 95 | 95 | U | 95 |
| PCB-1268 | ug/Kg | | | | < 96 | 96 | U | 96 | | | | | | | | | < 100 | 100 | U | 100 | < 100 | 100 | U | 100 | < 91 | 91 | U | 91 | < 95 | 95 | U | 95 |
| **Metals, Total** | | | | | | | | | | | | | | | | | | | | | | | | | | | | | | | | |
| Aluminum | mg/Kg | | | | 18,000 | 35 | | 7.1 | | | | | | | | | 12,200 | 43 | | 8.6 | 12,600 | 40 | | 8.0 | 12,300 | 38 | | 7.6 | 9,700 | 40 | | 8.0 |
| Antimony | mg/Kg | | | | < 1.8 | 1.8 | U | 1.8 | | | | | | | | | < 2.1 | 2.1 | U | 2.1 | < 2.0 | 2.0 | U | 2.0 | < 1.9 | 1.9 | U | 1.9 | < 2.0 | 2.0 | U | 2.0 |
| Arsenic | mg/Kg | 16 | 16 | 13 | 1.9 | 0.7 | | 0.71 | | | | | | | | | 4.7 | 0.9 | | 0.86 | 6.6 | 0.8 | | 0.80 | 11.8 | 0.8 | | 0.76 | 10 | 0.8 | | 0.80 |
| Barium | mg/Kg | 350 | 400 | 350 | 1750 | 7.1 | | 3.5 | | | | | | | | | 317 | 0.9 | | 0.43 | 326 | 0.8 | | 0.40 | 576 | 0.8 | | 0.38 | 210 | 0.8 | | 0.40 |
| Beryllium | mg/Kg | 14 | 72 | 7.2 | 0.61 | 0.28 | | 0.14 | | | | | | | | | 0.39 | 0.34 | | 0.17 | 0.39 | 0.32 | | 0.16 | 0.31 | 0.30 | | 0.15 | 0.25 | 0.32 | B | 0.16 |
| Cadmium | mg/Kg | 2.5 | 4.3 | 2.5 | 0.16 | 0.35 | B* | 0.14 | | | | | | | | | 0.85 | 0.43 | * | 0.17 | 1.27 | 0.40 | * | 0.16 | 3.29 | 0.38 | * | 0.15 | 1.39 | 0.40 | * | 0.16 |
| Calcium | mg/Kg | | | | 24,400 | 35 | | 33 | | | | | | | | | 72,400 | 43 | | 39 | 50,000 | 40 | | 37 | 23,500 | 38 | | 35 | 125,000 | 400 | | 370 |
| Chromium | mg/Kg | | | 30 | 40.6 | 0.35 | | 0.35 | | | | | | | | | 33.2 | 0.43 | | 0.43 | 27.8 | 0.40 | | 0.40 | 49.8 | 0.38 | | 0.38 | 33.3 | 0.40 | | 0.40 |
| Cobalt | mg/Kg | | | | 15.5 | 0.35 | | 0.35 | | | | | | | | | 10.3 | 0.43 | | 0.43 | 9.76 | 0.40 | | 0.40 | 12.3 | 0.38 | | 0.38 | 8.2 | 0.40 | | 0.40 |
| Copper | mg/Kg | 270 | 270 | 50 | 132 | 0.35 | N* | 0.35 | | | | | | | | | 170 | 4.3 | N* | 4.3 | 258 | 4.0 | N* | 4.0 | 649 | 3.8 | N* | 3.8 | 605 | 4.0 | N* | 4.0 |
| Iron | mg/Kg | | | | 44,000 | 35 | | 35 | | | | | | | | | 44,200 | 43 | | 43 | 51,500 | 40 | | 40 | 73,300 | 38 | | 38 | 53,900 | 40 | | 40 |
| Lead | mg/Kg | 400 | 400 | 63 | 88.8 | 0.7 | | 0.35 | | | | | | | | | 215 | 8.6 | | 4.3 | 516 | 8.0 | | 4.0 | 745 | 7.6 | | 3.8 | 402 | 8.0 | | 4.0 |
| Magnesium | mg/Kg | | | | 14,300 | 35 | | 35 | | | | | | | | | 30,700 | 43 | | 43 | 14,900 | 40 | | 40 | 4,470 | 38 | | 38 | 73,800 | 400 | | 400 |
| Manganese | mg/Kg | 2,000 | 2,000 | 1,600 | 322 | 3.5 | N | 3.5 | | | | | | | | | 390 | 4.3 | N | 4.3 | 721 | 4.0 | N | 4.0 | 627 | 3.8 | N | 3.8 | 410 | 4.0 | N | 4.0 |
| Mercury | mg/Kg | 0.81 | 0.81 | 0.18 | 0.09 | 0.03 | | 0.02 | | | | | | | | | 2.5 | 0.15 | N | 0.09 | 0.58 | 0.03 | N | 0.02 | 0.05 | 0.03 | N | 0.02 | 0.24 | 0.03 | N | 0.02 |
| Nickel | mg/Kg | 140 | 310 | 30 | 23.3 | 0.35 | | 0.35 | | | | | | | | | 21.9 | 0.43 | | 0.43 | 62 | 0.40 | | 0.40 | 38.2 | 0.38 | | 0.38 | 28.4 | 0.40 | | 0.40 |
| Potassium | mg/Kg | | | | 7,530 | 71 | | 28 | | | | | | | | | 3,840 | 86 | | 33 | 3,800 | 8 | | 3.1 | 2,940 | 8 | | 3.0 | 2,560 | 8 | | 3.1 |
| Selenium | mg/Kg | 36 | 180 | 3.9 | < 1.4 | 1.4 | U | 1.2 | | | | | | | | | < 1.7 | 1.7 | U | 1.5 | < 1.6 | 1.6 | U | 1.4 | < 1.5 | 1.5 | U | 1.3 | < 1.6 | 1.6 | U | 1.4 |
| Silver | mg/Kg | 36 | 180 | 2 | < 0.35 | 0.35 | U | 0.35 | | | | | | | | | 1.13 | 0.43 | | 0.43 | 1.23 | 0.40 | | 0.40 | 6.45 | 0.38 | | 0.38 | 1.9 | 0.40 | | 0.40 |
| Sodium | mg/Kg | | | | 1,130 | 7 | | 3.0 | | | | | | | | | 1,180 | 9 | | 3.7 | 1,440 | 8 | | 3.4 | 3,100 | 8 | | 3.3 | 3,960 | 8 | | 3.4 |

**TABLE 5A**
**SUBSURFACE SOIL LABORATORY ANALYTICAL RESULTS SUMMARY**

**REMEDIAL INVESTIGATION**
**109-125 MARBLEDALE ROAD**
**TUCKAHOE, NEW YORK**
**BCP # C360143**

| Analyte | Lab Sample Id<br>Collection Date<br>Client Id<br>Matrix | | | | BJ03572<br>4/15/2015<br>TB-1 (10-12)<br>Solid | | | | BJ03573<br>4/15/2015<br>TB-1 (20-22)<br>Solid | | | | BJ03574<br>4/15/2015<br>TB-101 (20-22)<br>Solid | | | | BJ03575<br>4/15/2015<br>TB-1 (14-22)<br>Solid | | | | BJ03576<br>4/15/2015<br>TB-101 (14-22)<br>Solid | | | | BJ03570<br>4/15/2015<br>TB-2 (2-4)<br>Solid | | | | BJ03571<br>4/15/2015<br>TB-2 (18-20)<br>Solid | | | |
|---|---|---|---|---|---|---|---|---|---|---|---|---|---|---|---|---|---|---|---|---|---|---|---|---|---|---|---|---|---|---|---|---|
| | Units | NY-Res. | NY-ResRestrict | NY-UnRestricted | Result | RL | Qual | MDL | Result | RL | Qual | MDL | Result | RL | Qual | MDL | Result | RL | Qual | MDL | Result | RL | Qual | MDL | Result | RL | Qual | MDL | Result | RL | Qual | MDL |
| Thallium | mg/Kg | | | | < 1.4 | 1.4 | U | 1.4 | | | | | | | | | < 1.7 | 1.7 | U | 1.7 | < 1.6 | 1.6 | U | 1.6 | < 1.5 | 1.5 | U | 1.5 | < 1.6 | 1.6 | U | 1.6 |
| Vanadium | mg/Kg | | | | 55.1 | 0.4 | | 0.35 | | | | | | | | | 48.9 | 0.4 | | 0.43 | 72.5 | 0.4 | | 0.40 | 26.4 | 0.4 | | 0.38 | 31.1 | 0.4 | | 0.40 |
| Zinc | mg/Kg | 2,200 | 10,000 | 109 | 5500 | 71 | * | 35 | | | | | | | | | 666 | 8.6 | * | 4.3 | 754 | 8.0 | * | 4.0 | 2680 | 76 | * | 38 | 721 | 8.0 | * | 4.0 |
| **Miscellaneous/Inorganics** | | | | | | | | | | | | | | | | | | | | | | | | | | | | | | | | |
| Percent Solid | % | | | | 86 | | | | | | | | | | | | 81 | | | | 82 | | | | 90 | | | | 87 | | | |
| Total Cyanide | mg/Kg | | | | < 0.58 | 0.58 | U | 0.29 | | | | | | | | | 0.443 | 0.56 | B | 0.28 | 1.14 | 0.51 | | 0.25 | 1.72 | 0.56 | | 0.28 | 6.37 | 0.52 | | 0.26 |

Result Detected

RL Exceeds Criteria

Result Exceeds Criteria

U — The compound was anlayzed for but not detected at or above the MDL. The number immediately preceding the "U" represents the PQL reporting level corrected for percent solids, weight and/or volume calculations, and dilution factors.

J — The value is estimated. This flag is used
a) on form 1 when the compound is reported above the MDL, but below the PQL, and
b) on the Tentatively Identified Compounds (TIC) form for all compounds identified.

N — The concentration is based on the response fo the nearest internal. This flag is used on the TIC form for all compounds identified.

S — This compound is a solvent that is used in the laboratory. Laboratory contamination is suspected if concentration is less than five times the reporting level.

D — The reported concentration is the result of a diluted analysis.

(*) — See report for comment.

**TABLE 5B**
**SUBSURFACE SOIL LABORATORY ANALYTICAL RESULTS SUMMARY**

**REMEDIAL INVESTIGATION**
**109-125 MARBLEDALE ROAD**
**TUCKAHOE, NEW YORK**
**BCP # C360143**

| Analyte | Lab Sample Id / Collection Date / Client Id / Matrix | | | | BH79483 3/3/2015 TB-3 (2-4) Soil | | | | BH79484 3/3/2015 TB-4 (24-26) Soil | | | | BH79485 3/3/2015 TB-4 (30-32) Soil | | | | BH82998 3/11/2015 TB-5 (0-2) Solid | | | | BH82999 3/11/2015 TB-5 (12-14) Solid | | | | BJ04209 4/16/2015 TB-6 6-8 FT Soil | | | | BJ04210 4/16/2015 TB-106 6-8 FT Soil | | | |
|---|---|---|---|---|---|---|---|---|---|---|---|---|---|---|---|---|---|---|---|---|---|---|---|---|---|---|---|---|---|---|---|---|
| | Units | NY-Res. | NY-ResRestrict | NY-UnRestricted | Result | RL | Qual | MDL | Result | RL | Qual | MDL | Result | RL | Qual | MDL | Result | RL | Qual | MDL | Result | RL | Qual | MDL | Result | RL | Qual | MDL | Result | RL | Qual | MDL |
| Volatiles (TCL) By SW8260C | | | | | | | | | | | | | | | | | | | | | | | | | | | | | | | | |
| 1,1,1-Trichloroethane | ug/kg | 100,000 | 100,000 | 680 | < 8.1 | 8.1 | U | 0.48 | < 8.1 | 8.1 | U | 0.81 | < 8.1 | 8.1 | U | 0.70 | < 10 | 10 | U | 1.0 | < 6.5 | 6.5 | U | 0.65 | < 5.3 | 5.3 | U | 0.53 | < 5.6 | 5.6 | U | 0.56 |
| 1,1,2,2-Tetrachloroethane | ug/kg | | | | < 8.1 | 8.1 | U | 0.96 | < 8.1 | 8.1 | U | 1.6 | < 8.1 | 8.1 | U | 1.4 | < 10 | 10 | U | 2.0 | < 6.5 | 6.5 | U | 1.3 | < 5.3 | 5.3 | U | 1.1 | < 5.6 | 5.6 | U | 1.1 |
| 1,1,2-Trichloroethane | ug/kg | | | | < 8.1 | 8.1 | U | 0.96 | < 8.1 | 8.1 | U | 1.6 | < 8.1 | 8.1 | U | 1.4 | < 10 | 10 | U | 2.0 | < 6.5 | 6.5 | U | 1.3 | < 5.3 | 5.3 | U | 1.1 | < 5.6 | 5.6 | U | 1.1 |
| 1,1-Dichloroethane | ug/kg | 19,000 | 26,000 | 270 | < 8.1 | 8.1 | U | 0.96 | < 8.1 | 8.1 | U | 1.6 | < 8.1 | 8.1 | U | 1.4 | < 10 | 10 | U | 2.0 | < 6.5 | 6.5 | U | 1.3 | < 5.3 | 5.3 | U | 1.1 | < 5.6 | 5.6 | U | 1.1 |
| 1,1-Dichloroethene | ug/kg | 100,000 | 100,000 | 330 | < 8.1 | 8.1 | U | 0.48 | < 8.1 | 8.1 | U | 0.81 | < 8.1 | 8.1 | U | 0.70 | < 10 | 10 | U | 1.0 | < 6.5 | 6.5 | U | 0.65 | < 5.3 | 5.3 | U | 0.53 | < 5.6 | 5.6 | U | 0.56 |
| 1,2,3-Trichlorobenzene | ug/kg | | | | < 360 | 360 | U | 0.96 | < 360 | 360 | U | 71 | < 360 | 360 | U | 84 | < 10 | 10 | U | 2.0 | < 6.5 | 6.5 | U | 1.3 | < 260 | 260 | U | 52 | < 5.6 | 5.6 | U | 1.1 |
| 1,2,4-Trichlorobenzene | ug/kg | | | | < 360 | 360 | U | 0.96 | < 360 | 360 | U | 71 | < 360 | 360 | U | 84 | < 10 | 10 | U | 2.0 | < 6.5 | 6.5 | U | 1.3 | < 260 | 260 | U | 52 | < 5.6 | 5.6 | U | 1.1 |
| 1,2-Dibromo-3-chloropropane | ug/kg | | | | < 360 | 360 | U | 0.96 | < 360 | 360 | U | 71 | < 360 | 360 | U | 84 | < 10 | 10 | U | 2.0 | < 6.5 | 6.5 | U | 1.3 | < 260 | 260 | U | 52 | < 5.6 | 5.6 | U | 1.1 |
| 1,2-Dibromoethane | ug/kg | | | | < 8.1 | 8.1 | U | 0.48 | < 8.1 | 8.1 | U | 0.81 | < 8.1 | 8.1 | U | 0.70 | < 10 | 10 | U | 1.0 | < 6.5 | 6.5 | U | 0.65 | < 5.3 | 5.3 | U | 0.53 | < 5.6 | 5.6 | U | 0.56 |
| 1,2-Dichlorobenzene | ug/kg | 100,000 | 100,000 | 1,100 | < 360 | 360 | U | 0.48 | < 360 | 360 | U | 36 | < 360 | 360 | JD | 42 | < 10 | 10 | U | 1.0 | < 6.5 | 6.5 | U | 0.65 | < 260 | 260 | U | 26 | 150 | 250 | J | 25 |
| 1,2-Dichloroethane | ug/kg | 2,300 | 3,100 | 20 | < 8.1 | 8.1 | U | 0.48 | < 8.1 | 8.1 | U | 0.81 | < 8.1 | 8.1 | U | 0.70 | < 10 | 10 | U | 1.0 | < 6.5 | 6.5 | U | 0.65 | < 5.3 | 5.3 | U | 0.53 | < 5.6 | 5.6 | U | 0.56 |
| 1,2-Dichloropropane | ug/kg | | | | < 8.1 | 8.1 | U | 0.96 | < 8.1 | 8.1 | U | 1.6 | < 8.1 | 8.1 | U | 1.4 | < 10 | 10 | U | 2.0 | < 6.5 | 6.5 | U | 1.3 | < 5.3 | 5.3 | U | 1.1 | < 5.6 | 5.6 | U | 1.1 |
| 1,3-Dichlorobenzene | ug/kg | 17,000 | 49,000 | 2,400 | < 360 | 360 | U | 0.48 | < 360 | 360 | U | 36 | < 360 | 360 | U | 42 | < 10 | 10 | U | 1.0 | < 6.5 | 6.5 | U | 0.65 | < 260 | 260 | U | 26 | < 5.6 | 5.6 | U | 0.56 |
| 1,4-Dichlorobenzene | ug/kg | 9,800 | 13,000 | 1,800 | < 360 | 360 | U | 0.48 | < 360 | 360 | U | 36 | < 360 | 360 | U | 42 | < 10 | 10 | U | 1.0 | < 6.5 | 6.5 | U | 0.65 | < 260 | 260 | U | 26 | < 5.6 | 5.6 | U | 0.56 |
| 2-Hexanone | ug/kg | | | | < 41 | 41 | U | 4.8 | < 41 | 41 | U | 8.1 | < 41 | 41 | U | 7.0 | < 50 | 50 | U | 10 | < 33 | 33 | U | 6.5 | < 26 | 26 | U | 5.3 | < 28 | 28 | U | 5.6 |
| 4-Methyl-2-pentanone | ug/kg | | | | < 41 | 41 | U | 4.8 | < 41 | 41 | U | 8.1 | < 41 | 41 | U | 7.0 | < 50 | 50 | U | 10 | < 33 | 33 | U | 6.5 | < 26 | 26 | U | 5.3 | < 28 | 28 | U | 5.6 |
| Acetone | ug/kg | 100,000 | 100,000 | 50 | 62 | 81 | S | 4.8 | 250 | 81 | S | 8.1 | 220 | 81 | S | 7.0 | < 50 | 50 | U | 10 | < 50 | 50 | U | 6.5 | 66 | 53 | S | 5.3 | 67 | 56 | S | 5.6 |
| Benzene | ug/kg | 2,900 | 4,800 | 60 | < 8.1 | 8.1 | U | 0.48 | < 8.1 | 8.1 | J | 0.81 | < 8.1 | 8.1 | J | 0.70 | < 10 | 10 | U | 1.0 | < 6.5 | 6.5 | U | 0.65 | 200 | 260 | J | 26 | 290 | 250 | | 25 |
| Bromochloromethane | ug/kg | | | | < 8.1 | 8.1 | U | 0.48 | < 8.1 | 8.1 | U | 0.81 | < 8.1 | 8.1 | U | 0.70 | < 10 | 10 | U | 1.0 | < 6.5 | 6.5 | U | 0.65 | < 5.3 | 5.3 | U | 0.53 | < 5.6 | 5.6 | U | 0.56 |
| Bromodichloromethane | ug/kg | | | | < 8.1 | 8.1 | U | 0.96 | < 8.1 | 8.1 | U | 1.6 | < 8.1 | 8.1 | U | 1.4 | < 10 | 10 | U | 2.0 | < 6.5 | 6.5 | U | 1.3 | < 5.3 | 5.3 | U | 1.1 | < 5.6 | 5.6 | U | 1.1 |
| Bromoform | ug/kg | | | | < 8.1 | 8.1 | U | 0.96 | < 8.1 | 8.1 | U | 1.6 | < 8.1 | 8.1 | U | 1.4 | < 10 | 10 | U | 2.0 | < 6.5 | 6.5 | U | 1.3 | < 5.3 | 5.3 | U | 1.1 | < 5.6 | 5.6 | U | 1.1 |
| Bromomethane | ug/kg | | | | < 8.1 | 8.1 | U | 1.9 | < 8.1 | 8.1 | U | 3.2 | < 8.1 | 8.1 | U | 2.8 | < 10 | 10 | U | 4.0 | < 6.5 | 6.5 | U | 2.6 | < 5.3 | 5.3 | U | 2.1 | < 5.6 | 5.6 | U | 2.2 |
| Carbon Disulfide | ug/kg | | | | < 8.1 | 8.1 | U | 0.96 | < 8.1 | 8.1 | J | 1.6 | < 8.1 | 8.1 | J | 1.4 | < 10 | 10 | U | 2.0 | < 6.5 | 6.5 | U | 1.3 | 1.5 | 5.3 | J | 1.1 | 1.2 | 5.6 | J | 1.1 |
| Carbon tetrachloride | ug/kg | 1,400 | 2,400 | 760 | < 8.1 | 8.1 | U | 0.96 | < 8.1 | 8.1 | U | 1.6 | < 8.1 | 8.1 | U | 1.4 | < 10 | 10 | U | 2.0 | < 6.5 | 6.5 | U | 1.3 | < 5.3 | 5.3 | U | 1.1 | < 5.6 | 5.6 | U | 1.1 |
| Chlorobenzene | ug/kg | 100,000 | 100,000 | 1,100 | < 20 | 20 | U | 20 | < 20 | 20 | U | 360 | < 20 | 20 | U | 420 | < 10 | 10 | U | 1.0 | < 6.5 | 6.5 | U | 0.65 | < 5.3 | 5.3 | U | 0.53 | < 5.6 | 5.6 | U | 0.56 |
| Chloroethane | ug/kg | | | | < 8.1 | 8.1 | U | 0.48 | < 8.1 | 8.1 | U | 0.81 | < 8.1 | 8.1 | U | 0.70 | < 10 | 10 | U | 1.0 | < 6.5 | 6.5 | U | 0.65 | < 5.3 | 5.3 | U | 0.53 | < 5.6 | 5.6 | U | 0.56 |
| Chloroform | ug/kg | 10,000 | 49,000 | 370 | < 8.1 | 8.1 | U | 0.48 | < 8.1 | 8.1 | U | 0.81 | < 8.1 | 8.1 | U | 0.70 | < 10 | 10 | U | 1.0 | < 6.5 | 6.5 | U | 0.65 | < 5.3 | 5.3 | U | 0.53 | < 5.6 | 5.6 | U | 0.56 |
| Chloromethane | ug/kg | | | | < 8.1 | 8.1 | U | 0.96 | < 8.1 | 8.1 | U | 1.6 | < 8.1 | 8.1 | U | 1.4 | < 10 | 10 | U | 2.0 | < 6.5 | 6.5 | U | 1.3 | < 5.3 | 5.3 | U | 1.1 | < 5.6 | 5.6 | U | 1.1 |
| cis-1,2-Dichloroethene | ug/kg | 59,000 | 100,000 | 250 | < 8.1 | 8.1 | U | 0.48 | < 8.1 | 8.1 | J | 0.81 | < 8.1 | 8.1 | J | 0.70 | < 10 | 10 | U | 1.0 | < 6.5 | 6.5 | U | 0.65 | < 5.3 | 5.3 | U | 0.53 | < 5.6 | 5.6 | U | 0.56 |
| cis-1,3-Dichloropropene | ug/kg | | | | < 8.1 | 8.1 | U | 0.48 | < 8.1 | 8.1 | U | 0.81 | < 8.1 | 8.1 | U | 0.70 | < 10 | 10 | U | 1.0 | < 6.5 | 6.5 | U | 0.65 | < 5.3 | 5.3 | U | 0.53 | < 5.6 | 5.6 | U | 0.56 |
| Cyclohexane | ug/kg | | | | < 8.1 | 8.1 | U | 0.96 | < 8.1 | 8.1 | U | 1.6 | < 8.1 | 8.1 | U | 1.4 | < 10 | 10 | U | 2.0 | < 6.5 | 6.5 | U | 1.3 | < 5.3 | 5.3 | U | 1.1 | < 5.6 | 5.6 | U | 1.1 |
| Dibromochloromethane | ug/kg | | | | < 8.1 | 8.1 | U | 0.96 | < 8.1 | 8.1 | U | 1.6 | < 8.1 | 8.1 | U | 1.4 | < 10 | 10 | U | 2.0 | < 6.5 | 6.5 | U | 1.3 | < 5.3 | 5.3 | U | 1.1 | < 5.6 | 5.6 | U | 1.1 |
| Dichlorodifluoromethane | ug/kg | | | | < 8.1 | 8.1 | U | 0.48 | < 8.1 | 8.1 | J | 0.81 | < 8.1 | 8.1 | U | 0.70 | < 10 | 10 | J | 1.0 | < 6.5 | 6.5 | U | 0.65 | 81 | 260 | J | 26 | 120 | 250 | J | 25 |
| Ethylbenzene | ug/kg | 30,000 | 41,000 | 1,000 | < 8.1 | 8.1 | U | 0.48 | < 8.1 | 8.1 | J | 0.81 | < 8.1 | 8.1 | J | 0.70 | < 10 | 10 | U | 1.0 | < 6.5 | 6.5 | U | 0.65 | 130 | 260 | J | 26 | 190 | 250 | J | 25 |
| Isopropylbenzene | ug/kg | | | | < 360 | 360 | U | 0.48 | < 360 | 360 | U | 36 | < 360 | 360 | JD | 42 | < 10 | 10 | U | 1.0 | < 6.5 | 6.5 | U | 0.65 | 27 | 260 | J | 26 | 37 | 250 | J | 25 |
| m&p-Xylene | ug/kg | | | | < 8.1 | 8.1 | U | 0.96 | < 8.1 | 8.1 | J | 1.6 | < 8.1 | 8.1 | J | 1.4 | < 10 | 10 | U | 2.0 | < 6.5 | 6.5 | U | 1.3 | 150 | 260 | J | 52 | 220 | 250 | J | 51 |
| Methyl ethyl ketone | ug/kg | 100,000 | 100,000 | 120 | < 49 | 49 | J | 4.8 | 110 | 49 | | 8.1 | 110 | 49 | | 7.0 | < 60 | 60 | U | 10 | < 39 | 39 | U | 6.5 | 11 | 32 | J | 5.3 | 14 | 33 | J | 5.6 |
| Methyl t-butyl ether (MTBE) | ug/kg | 62,000 | 100,000 | 930 | < 16 | 16 | U | 0.96 | < 16 | 16 | U | 1.6 | < 16 | 16 | J | 1.4 | < 20 | 20 | U | 2.0 | < 13 | 13 | U | 1.3 | < 11 | 11 | U | 1.1 | < 11 | 11 | U | 1.1 |
| Methylacetate | ug/kg | | | | < 6.5 | 6.5 | U | 2.4 | < 6.5 | 6.5 | U | 4.1 | < 6.5 | 6.5 | U | 3.5 | < 30 | 30 | U | 5.0 | < 15 | 15 | U | 3.3 | < 5.3 | 5.3 | U | 2.6 | < 5.6 | 5.6 | U | 2.8 |
| Methylcyclohexane | ug/kg | | | | < 8.1 | 8.1 | U | 0.96 | 13 | 8.1 | | 1.6 | 12 | 8.1 | | 1.4 | < 10 | 10 | U | 2.0 | < 6.5 | 6.5 | U | 1.3 | < 5.3 | 5.3 | U | 1.1 | < 5.6 | 5.6 | U | 1.1 |
| Methylene chloride | ug/kg | 51,000 | 100,000 | 50 | < 8.1 | 8.1 | U | 4.8 | < 8.1 | 8.1 | U | 8.1 | < 8.1 | 8.1 | U | 7.0 | < 10 | 10 | U | 10 | < 6.5 | 6.5 | U | 6.5 | < 5.3 | 5.3 | U | 5.3 | < 5.6 | 5.6 | U | 5.6 |
| o-Xylene | ug/kg | | | | < 8.1 | 8.1 | U | 0.96 | < 8.1 | 8.1 | J | 1.6 | < 8.1 | 8.1 | J | 1.4 | < 10 | 10 | U | 2.0 | < 6.5 | 6.5 | U | 1.3 | 59 | 260 | J | 52 | 89 | 250 | J | 51 |
| Styrene | ug/kg | | | | < 8.1 | 8.1 | U | 0.48 | < 8.1 | 8.1 | U | 0.81 | < 8.1 | 8.1 | U | 0.70 | < 10 | 10 | U | 1.0 | < 6.5 | 6.5 | U | 0.65 | < 5.3 | 5.3 | U | 0.53 | < 5.6 | 5.6 | U | 0.56 |
| Tetrachloroethene | ug/kg | 5,500 | 19,000 | 1,300 | < 8.1 | 8.1 | U | 0.96 | < 8.1 | 8.1 | U | 1.6 | < 8.1 | 8.1 | U | 1.4 | < 10 | 10 | U | 2.0 | < 6.5 | 6.5 | U | 1.3 | < 5.3 | 5.3 | U | 1.1 | < 5.6 | 5.6 | U | 1.1 |
| Toluene | ug/kg | 100,000 | 100,000 | 700 | < 8.1 | 8.1 | U | 0.48 | < 8.1 | 8.1 | J | 0.81 | < 8.1 | 8.1 | J | 0.70 | < 10 | 10 | U | 1.0 | < 6.5 | 6.5 | U | 0.65 | 690 | 260 | | 26 | 1,000 | 250 | | 25 |
| Total Xylenes | ug/kg | | 100,000 | 260 | < 8.1 | 8.1 | U | 0.96 | < 8.1 | 8.1 | U | 1.6 | < 8.1 | 8.1 | | 1.4 | < 10 | 10 | U | 2.0 | < 6.5 | 6.5 | U | 1.3 | < 260 | 260 | U | 52 | 309 | 250 | | 51 |
| trans-1,2-Dichloroethene | ug/kg | 100,000 | 100,000 | 190 | < 8.1 | 8.1 | U | 0.48 | < 8.1 | 8.1 | U | 0.81 | < 8.1 | 8.1 | U | 0.70 | < 10 | 10 | U | 1.0 | < 6.5 | 6.5 | U | 0.65 | < 5.3 | 5.3 | U | 0.53 | < 5.6 | 5.6 | U | 0.56 |
| trans-1,3-Dichloropropene | ug/kg | | | | < 8.1 | 8.1 | U | 0.48 | < 8.1 | 8.1 | U | 0.81 | < 8.1 | 8.1 | U | 0.70 | < 10 | 10 | U | 1.0 | < 6.5 | 6.5 | U | 0.65 | < 5.3 | 5.3 | U | 0.53 | < 5.6 | 5.6 | U | 0.56 |
| Trichloroethene | ug/kg | 10,000 | 21,000 | 470 | < 8.1 | 8.1 | U | 0.48 | < 8.1 | 8.1 | U | 0.81 | < 8.1 | 8.1 | U | 0.70 | < 10 | 10 | U | 1.0 | < 6.5 | 6.5 | U | 0.65 | < 5.3 | 5.3 | U | 0.53 | < 5.6 | 5.6 | U | 0.56 |
| Trichlorofluoromethane | ug/kg | | | | < 8.1 | 8.1 | U | 0.96 | < 8.1 | 8.1 | J | 1.6 | < 8.1 | 8.1 | U | 1.4 | < 10 | 10 | U | 2.0 | < 6.5 | 6.5 | U | 1.3 | < 5.3 | 5.3 | U | 1.1 | < 5.6 | 5.6 | U | 1.1 |

**TABLE 5B**
**SUBSURFACE SOIL LABORATORY ANALYTICAL RESULTS SUMMARY**

**REMEDIAL INVESTIGATION**
**109-125 MARBLEDALE ROAD**
**TUCKAHOE, NEW YORK**
**BCP # C360143**

| Analyte | Lab Sample Id / Collection Date / Client Id / Matrix | | | | BH79483 3/3/2015 TB-3 (2-4) Soil | | | | BH79484 3/3/2015 TB-4 (24-26) Soil | | | | BH79485 3/3/2015 TB-4 (30-32) Soil | | | | BH82998 3/11/2015 TB-5 (0-2) Solid | | | | BH82999 3/11/2015 TB-5 (12-14) Solid | | | | BJ04209 4/16/2015 TB-6 6-8 FT Soil | | | | BJ04210 4/16/2015 TB-106 6-8 FT Soil | | | |
|---|---|---|---|---|---|---|---|---|---|---|---|---|---|---|---|---|---|---|---|---|---|---|---|---|---|---|---|---|---|---|---|---|
| | Units | NY-Res. | NY-ResRestrict | NY-UnRestricted | Result | RL | Qual | MDL | Result | RL | Qual | MDL | Result | RL | Qual | MDL | Result | RL | Qual | MDL | Result | RL | Qual | MDL | Result | RL | Qual | MDL | Result | RL | Qual | MDL |
| Trichlorotrifluoroethane | ug/kg | | | | < 8.1 | 8.1 | U | 0.48 | < 8.1 | 8.1 | U | 0.81 | < 8.1 | 8.1 | U | 0.70 | < 10 | 10 | U | 1.0 | < 6.5 | 6.5 | U | 0.65 | < 5.3 | 5.3 | U | 0.53 | < 5.6 | 5.6 | U | 0.56 |
| Vinyl chloride | ug/kg | 210 | 900 | 20 | < 8.1 | 8.1 | U | 0.48 | < 8.1 | 8.1 | U | 0.81 | < 8.1 | 8.1 | U | 0.70 | < 10 | 10 | U | 1.0 | < 6.5 | 6.5 | U | 0.65 | < 5.3 | 5.3 | U | 0.53 | < 5.6 | 5.6 | U | 0.56 |
| **1,4-dioxane By SW8260C** | | | | | | | | | | | | | | | | | | | | | | | | | | | | | | | | |
| 1,4-dioxane | ug/kg | 9,800 | 13,000 | 100 | < 96 | 96 | U | 96 | < 100 | 100 | U | 100 | < 100 | 100 | U | 100 | < 100 | 100 | U | 80 | < 100 | 100 | U | 52 | < 100 | 100 | U | 42 | < 100 | 100 | U | 44 |
| **Semivolatiles By SW8270D** | | | | | | | | | | | | | | | | | | | | | | | | | | | | | | | | |
| 1,1-Biphenyl | ug/Kg | | | | < 560 | 560 | U | 250 | < 590 | 590 | U | 260 | < 380 | 380 | U | 170 | < 540 | 540 | U | 240 | < 500 | 500 | U | 220 | | | | | | | | |
| 1,2,4,5-Tetrachlorobenzene | ug/Kg | | | | < 560 | 560 | U | 280 | < 590 | 590 | U | 300 | < 380 | 380 | U | 190 | < 540 | 540 | U | 270 | < 500 | 500 | U | 250 | | | | | | | | |
| 2,3,4,6-tetrachlorophenol | ug/Kg | | | | < 560 | 560 | U | 380 | < 590 | 590 | U | 390 | < 380 | 380 | U | 250 | < 540 | 540 | U | 360 | < 500 | 500 | U | 330 | | | | | | | | |
| 2,4,5-Trichlorophenol | ug/Kg | | | | < 560 | 560 | U | 440 | < 590 | 590 | U | 460 | < 380 | 380 | U | 300 | < 540 | 540 | U | 420 | < 500 | 500 | U | 390 | | | | | | | | |
| 2,4,6-Trichlorophenol | ug/Kg | | | | < 560 | 560 | U | 260 | < 590 | 590 | U | 270 | < 380 | 380 | U | 170 | < 540 | 540 | U | 250 | < 500 | 500 | U | 230 | | | | | | | | |
| 2,4-Dichlorophenol | ug/Kg | | | | < 560 | 560 | U | 280 | < 590 | 590 | U | 300 | < 380 | 380 | U | 190 | < 540 | 540 | U | 270 | < 500 | 500 | U | 250 | | | | | | | | |
| 2,4-Dimethylphenol | ug/Kg | | | | < 560 | 560 | U | 200 | < 590 | 590 | U | 210 | < 380 | 380 | U | 130 | < 540 | 540 | U | 190 | < 500 | 500 | U | 180 | | | | | | | | |
| 2,4-Dinitrophenol | ug/Kg | | | | < 1300 | 1,300 | U | 560 | < 1300 | 1,300 | U | 590 | < 870 | 870 | U | 380 | < 1200 | 1,200 | U | 540 | < 1100 | 1,100 | U | 500 | | | | | | | | |
| 2,4-Dinitrotoluene | ug/Kg | | | | < 560 | 560 | U | 320 | < 590 | 590 | U | 330 | < 380 | 380 | U | 210 | < 540 | 540 | U | 300 | < 500 | 500 | U | 280 | | | | | | | | |
| 2,6-Dinitrotoluene | ug/Kg | | | | < 560 | 560 | U | 250 | < 590 | 590 | U | 260 | < 380 | 380 | U | 170 | < 540 | 540 | U | 240 | < 500 | 500 | U | 220 | | | | | | | | |
| 2-Chloronaphthalene | ug/Kg | | | | < 560 | 560 | U | 230 | < 590 | 590 | U | 240 | < 380 | 380 | U | 150 | < 540 | 540 | U | 220 | < 500 | 500 | U | 200 | | | | | | | | |
| 2-Chlorophenol | ug/Kg | | | | < 560 | 560 | U | 230 | < 590 | 590 | U | 240 | < 380 | 380 | U | 150 | < 540 | 540 | U | 220 | < 500 | 500 | U | 200 | | | | | | | | |
| 2-Methylnaphthalene | ug/Kg | | | | 690 | 560 | | 240 | < 590 | 590 | U | 250 | < 380 | 380 | J | 160 | < 540 | 540 | J | 230 | 810 | 500 | | 210 | | | | | | | | |
| 2-Methylphenol (o-cresol) | ug/Kg | 100,000 | 100,000 | 330 | < 330 | 330 | U | 380 | < 330 | 330 | U | 390 | < 330 | 330 | U | 250 | < 330 | 330 | U | 360 | < 330 | 330 | U | 330 | | | | | | | | |
| 2-Nitroaniline | ug/Kg | | | | < 1300 | 1,300 | U | 810 | < 1300 | 1,300 | U | 850 | < 870 | 870 | U | 550 | < 1200 | 1,200 | U | 780 | < 1100 | 1,100 | U | 720 | | | | | | | | |
| 2-Nitrophenol | ug/Kg | | | | < 560 | 560 | U | 510 | < 590 | 590 | U | 530 | < 380 | 380 | U | 340 | < 540 | 540 | U | 490 | < 500 | 500 | U | 450 | | | | | | | | |
| 3&4-Methylphenol (m&p-cresol) | ug/Kg | | | | < 800 | 800 | U | 320 | < 840 | 840 | U | 330 | < 540 | 540 | J | 210 | < 770 | 770 | U | 300 | < 710 | 710 | U | 280 | | | | | | | | |
| 3,3'-Dichlorobenzidine | ug/Kg | | | | < 970 | 970 | U | 320 | < 1000 | 1,000 | U | 340 | < 650 | 650 | U | 220 | < 930 | 930 | U | 310 | < 850 | 850 | U | 280 | | | | | | | | |
| 3-Nitroaniline | ug/Kg | | | | < 1300 | 1,300 | U | 1800 | < 1300 | 1,300 | U | 1800 | < 870 | 870 | U | 1200 | < 1200 | 1,200 | U | 1700 | < 1100 | 1,100 | U | 1500 | | | | | | | | |
| 4,6-Dinitro-2-methylphenol | ug/Kg | | | | < 2300 | 2,300 | U | 560 | < 2400 | 2,400 | U | 590 | < 1600 | 1,600 | U | 380 | < 2200 | 2,200 | U | 540 | < 2100 | 2,100 | U | 500 | | | | | | | | |
| 4-Bromophenyl phenyl ether | ug/Kg | | | | < 800 | 800 | U | 240 | < 840 | 840 | U | 250 | < 540 | 540 | U | 160 | < 770 | 770 | U | 230 | < 710 | 710 | U | 210 | | | | | | | | |
| 4-Chloro-3-methylphenol | ug/Kg | | | | < 560 | 560 | U | 280 | < 590 | 590 | U | 300 | < 380 | 380 | U | 190 | < 540 | 540 | U | 270 | < 500 | 500 | U | 250 | | | | | | | | |
| 4-Chloroaniline | ug/Kg | | | | < 560 | 560 | U | 380 | < 590 | 590 | U | 390 | < 380 | 380 | U | 250 | < 540 | 540 | U | 360 | < 500 | 500 | U | 330 | | | | | | | | |
| 4-Chlorophenyl phenyl ether | ug/Kg | | | | < 560 | 560 | U | 270 | < 590 | 590 | U | 280 | < 380 | 380 | U | 180 | < 540 | 540 | U | 260 | < 500 | 500 | U | 240 | | | | | | | | |
| 4-Nitroaniline | ug/Kg | | | | < 1300 | 1,300 | U | 270 | < 1300 | 1,300 | U | 280 | < 870 | 870 | U | 180 | < 1200 | 1,200 | U | 260 | < 1100 | 1,100 | U | 240 | | | | | | | | |
| 4-Nitrophenol | ug/Kg | | | | < 2300 | 2,300 | U | 360 | < 2400 | 2,400 | U | 380 | < 1600 | 1,600 | U | 240 | < 2200 | 2,200 | U | 350 | < 2100 | 2,100 | U | 320 | | | | | | | | |
| Acenaphthene | ug/Kg | 100,000 | 100,000 | 20,000 | < 560 | 560 | J | 240 | < 590 | 590 | U | 250 | < 380 | 380 | U | 160 | < 540 | 540 | U | 230 | < 500 | 500 | U | 220 | | | | | | | | |
| Acenaphthylene | ug/Kg | 100,000 | 100,000 | 100,000 | 810 | 560 | | 230 | < 590 | 590 | U | 230 | < 380 | 380 | U | 150 | < 540 | 540 | U | 220 | < 500 | 500 | U | 200 | | | | | | | | |
| Acetophenone | ug/Kg | | | | < 560 | 560 | U | 250 | < 590 | 590 | U | 260 | < 380 | 380 | U | 170 | < 540 | 540 | U | 240 | < 500 | 500 | U | 220 | | | | | | | | |
| Anthracene | ug/Kg | 100,000 | 100,000 | 100,000 | 1,500 | 560 | | 260 | < 590 | 590 | U | 270 | < 380 | 380 | U | 180 | < 540 | 540 | J | 250 | < 500 | 500 | J | 230 | | | | | | | | |
| Atrazine | ug/Kg | | | | < 560 | 560 | U | 320 | < 590 | 590 | U | 340 | < 380 | 380 | U | 220 | < 540 | 540 | U | 310 | < 500 | 500 | U | 280 | | | | | | | | |
| Benz(a)anthracene | ug/Kg | 1,000 | 1,000 | 1,000 | 5,600 | 560 | | 270 | < 590 | 590 | J | 280 | < 380 | 380 | J | 180 | 980 | 540 | | 260 | 790 | 500 | | 240 | | | | | | | | |
| Benzaldehyde | ug/Kg | | | | < 560 | 560 | U | 240 | < 590 | 590 | U | 250 | 620 | 380 | | 160 | < 540 | 540 | U | 230 | < 500 | 500 | U | 210 | | | | | | | | |
| Benzo(a)pyrene | ug/Kg | 1,000 | 1,000 | 1,000 | 5,800 | 560 | | 260 | < 590 | 590 | | 270 | < 380 | 380 | | 180 | 870 | 540 | | 250 | 700 | 500 | | 230 | | | | | | | | |
| Benzo(b)fluoranthene | ug/Kg | 1,000 | 1,000 | 1,000 | 7,700 | 560 | | 280 | 790 | 590 | | 290 | 640 | 380 | | 190 | 1,100 | 540 | | 260 | 800 | 500 | | 240 | | | | | | | | |
| Benzo(ghi)perylene | ug/Kg | 100,000 | 100,000 | 100,000 | 2,900 | 560 | | 260 | < 590 | 590 | J | 270 | < 380 | 380 | U | 180 | < 540 | 540 | J | 250 | < 500 | 500 | J | 230 | | | | | | | | |
| Benzo(k)fluoranthene | ug/Kg | 1,000 | 3,900 | 800 | 2,500 | 560 | | 270 | < 590 | 590 | J | 280 | < 380 | 380 | J | 180 | < 540 | 540 | J | 260 | < 500 | 500 | J | 240 | | | | | | | | |
| Benzyl butyl phthalate | ug/Kg | | | | < 560 | 560 | U | 210 | < 590 | 590 | U | 220 | < 380 | 380 | U | 140 | < 540 | 540 | U | 200 | < 500 | 500 | U | 180 | | | | | | | | |
| Bis(2-chloroethoxy)methane | ug/Kg | | | | < 560 | 560 | U | 220 | < 590 | 590 | U | 230 | < 380 | 380 | U | 150 | < 540 | 540 | U | 210 | < 500 | 500 | U | 200 | | | | | | | | |
| Bis(2-chloroethyl)ether | ug/Kg | | | | < 800 | 800 | U | 220 | < 840 | 840 | U | 230 | < 540 | 540 | U | 150 | < 770 | 770 | U | 210 | < 710 | 710 | U | 190 | | | | | | | | |
| Bis(2-chloroisopropyl)ether | ug/Kg | | | | < 560 | 560 | U | 220 | < 590 | 590 | U | 230 | < 380 | 380 | U | 150 | < 540 | 540 | U | 210 | < 500 | 500 | U | 200 | | | | | | | | |
| Bis(2-ethylhexyl)phthalate | ug/Kg | | | | 780 | 560 | | 230 | 3,600 | 590 | | 240 | 3,200 | 380 | | 160 | < 540 | 540 | J | 220 | < 500 | 500 | U | 200 | | | | | | | | |
| Caprolactam | ug/Kg | | | | < 560 | 560 | U | 560 | < 590 | 590 | U | 590 | < 380 | 380 | U | 380 | < 540 | 540 | U | 540 | < 500 | 500 | U | 500 | | | | | | | | |
| Carbazole | ug/Kg | | | | < 2300 | 2,300 | U | 610 | < 2400 | 2,400 | U | 640 | < 1600 | 1,600 | U | 410 | < 2200 | 2,200 | U | 590 | < 2100 | 2,100 | U | 540 | | | | | | | | |
| Chrysene | ug/Kg | 1,000 | 3,900 | 1,000 | 6,000 | 560 | | 270 | 730 | 590 | | 280 | 640 | 380 | | 180 | 970 | 540 | | 260 | 770 | 500 | | 240 | | | | | | | | |
| Dibenz(a,h)anthracene | ug/Kg | 330 | 330 | 330 | 790 | 560 | | 260 | < 330 | 330 | U | 270 | < 330 | 330 | U | 180 | < 330 | 330 | U | 250 | < 330 | 330 | U | 230 | | | | | | | | |

**TABLE 5B**
**SUBSURFACE SOIL LABORATORY ANALYTICAL RESULTS SUMMARY**

**REMEDIAL INVESTIGATION**
**109-125 MARBLEDALE ROAD**
**TUCKAHOE, NEW YORK**
**BCP # C360143**

| Analyte | Lab Sample Id / Collection Date / Client Id / Matrix | | | | BH79483 3/3/2015 TB-3 (2-4) Soil | | | | BH79484 3/3/2015 TB-4 (24-26) Soil | | | | BH79485 3/3/2015 TB-4 (30-32) Soil | | | | BH82998 3/11/2015 TB-5 (0-2) Solid | | | | BH82999 3/11/2015 TB-5 (12-14) Solid | | | | BJ04209 4/16/2015 TB-6 6-8 FT Soil | | | | BJ04210 4/16/2015 TB-106 6-8 FT Soil | | | |
|---|---|---|---|---|---|---|---|---|---|---|---|---|---|---|---|---|---|---|---|---|---|---|---|---|---|---|---|---|---|---|---|---|
| | Units | NY-Res. | NY-ResRestrict | NY-UnRestricted | Result | RL | Qual | MDL | Result | RL | Qual | MDL | Result | RL | Qual | MDL | Result | RL | Qual | MDL | Result | RL | Qual | MDL | Result | RL | Qual | MDL | Result | RL | Qual | MDL |
| Dibenzofuran | ug/Kg | | | 7,000 | < 560 | 560 | U | 240 | < 590 | 590 | U | 240 | < 380 | 380 | U | 160 | < 540 | 540 | U | 230 | < 500 | 500 | U | 210 | | | | | | | | |
| Diethyl phthalate | ug/Kg | | | | < 560 | 560 | U | 250 | < 590 | 590 | U | 260 | < 380 | 380 | U | 170 | < 540 | 540 | U | 240 | < 500 | 500 | U | 220 | | | | | | | | |
| Dimethylphthalate | ug/Kg | | | | < 560 | 560 | U | 250 | < 590 | 590 | U | 260 | < 380 | 380 | U | 170 | < 540 | 540 | U | 240 | < 500 | 500 | U | 220 | | | | | | | | |
| Di-n-butylphthalate | ug/Kg | | | | < 560 | 560 | U | 210 | < 590 | 590 | U | 220 | < 380 | 380 | U | 140 | < 540 | 540 | U | 210 | < 500 | 500 | U | 190 | | | | | | | | |
| Di-n-octylphthalate | ug/Kg | | | | < 560 | 560 | U | 210 | < 590 | 590 | U | 220 | < 380 | 380 | U | 140 | < 540 | 540 | U | 200 | < 500 | 500 | U | 180 | | | | | | | | |
| Fluoranthene | ug/Kg | 100,000 | 100,000 | 100,000 | 7,100 | 560 | | 260 | 850 | 590 | | 270 | 990 | 380 | | 180 | 1,400 | 540 | | 250 | 1,300 | 500 | | 230 | | | | | | | | |
| Fluorene | ug/Kg | 100,000 | 100,000 | 30,000 | < 560 | 560 | J | 270 | < 590 | 590 | U | 280 | < 380 | 380 | U | 180 | < 540 | 540 | U | 250 | < 500 | 500 | U | 230 | | | | | | | | |
| Hexachlorobenzene | ug/Kg | | | | < 560 | 560 | U | 240 | < 590 | 590 | U | 240 | < 380 | 380 | U | 160 | < 540 | 540 | U | 230 | < 500 | 500 | U | 210 | | | | | | | | |
| Hexachlorobutadiene | ug/Kg | | | | < 560 | 560 | U | 290 | < 590 | 590 | U | 300 | < 380 | 380 | U | 200 | < 540 | 540 | U | 280 | < 500 | 500 | U | 260 | | | | | | | | |
| Hexachlorocyclopentadiene | ug/Kg | | | | < 560 | 560 | U | 250 | < 590 | 590 | U | 260 | < 380 | 380 | U | 170 | < 540 | 540 | U | 240 | < 500 | 500 | U | 220 | | | | | | | | |
| Hexachloroethane | ug/Kg | | | | < 560 | 560 | U | 240 | < 590 | 590 | U | 250 | < 380 | 380 | U | 160 | < 540 | 540 | U | 230 | < 500 | 500 | U | 210 | | | | | | | | |
| Indeno(1,2,3-cd)pyrene | ug/Kg | 500 | 500 | 500 | 2,700 | 560 | | 270 | < 500 | 500 | J | 280 | < 380 | 380 | U | 180 | < 500 | 500 | J | 260 | < 500 | 500 | J | 240 | | | | | | | | |
| Isophorone | ug/Kg | | | | < 560 | 560 | U | 230 | < 590 | 590 | U | 230 | < 380 | 380 | U | 150 | < 540 | 540 | U | 220 | < 500 | 500 | U | 200 | | | | | | | | |
| Naphthalene | ug/Kg | 100,000 | 100,000 | 12,000 | 720 | 560 | | 230 | < 590 | 590 | U | 240 | < 380 | 380 | U | 160 | < 540 | 540 | J | 220 | 740 | 500 | | 200 | | | | | | | | |
| Nitrobenzene | ug/Kg | | | | < 560 | 560 | U | 280 | < 590 | 590 | U | 290 | < 380 | 380 | U | 190 | < 540 | 540 | U | 270 | < 500 | 500 | U | 250 | | | | | | | | |
| N-Nitrosodimethylamine | ug/Kg | | | | < 800 | 800 | U | 230 | < 840 | 840 | U | 240 | < 540 | 540 | U | 150 | < 770 | 770 | U | 220 | < 710 | 710 | U | 200 | | | | | | | | |
| N-Nitrosodi-n-propylamine | ug/Kg | | | | < 560 | 560 | U | 260 | < 590 | 590 | U | 270 | < 380 | 380 | U | 180 | < 540 | 540 | U | 250 | < 500 | 500 | U | 230 | | | | | | | | |
| N-Nitrosodiphenylamine | ug/Kg | | | | < 800 | 800 | U | 310 | < 840 | 840 | U | 320 | < 540 | 540 | U | 210 | < 770 | 770 | U | 300 | < 710 | 710 | U | 270 | | | | | | | | |
| Pentachlorophenol | ug/Kg | 2,400 | 6,700 | 800 | < 800 | 800 | U | 300 | < 800 | 800 | U | 320 | < 540 | 540 | U | 200 | < 770 | 770 | U | 290 | < 710 | 710 | U | 270 | | | | | | | | |
| Phenanthrene | ug/Kg | 100,000 | 100,000 | 100,000 | 4,100 | 560 | | 230 | 800 | 590 | | 240 | 440 | 380 | | 150 | 1,300 | 540 | | 220 | 1,400 | 500 | | 200 | | | | | | | | |
| Phenol | ug/Kg | 100,000 | 100,000 | 330 | < 330 | 330 | J | 260 | < 330 | 330 | U | 270 | < 330 | 330 | U | 170 | < 330 | 330 | U | 250 | < 330 | 330 | U | 230 | | | | | | | | |
| Pyrene | ug/Kg | 100,000 | 100,000 | 100,000 | 5,800 | 560 | | 280 | 670 | 590 | | 290 | 810 | 380 | | 190 | 1,100 | 540 | | 270 | 1,000 | 500 | | 240 | | | | | | | | |
| **PCBs By SW8082A** | | | | | | | | | | | | | | | | | | | | | | | | | | | | | | | | |
| PCB-1016 | ug/Kg | 1,000 | | 100 | < 79 | 79 | U | 79 | < 410 | 410 | U | 410 | < 54 | 54 | U | 54 | < 77 | 77 | U | 77 | < 72 | 72 | U | 72 | | | | | | | | |
| PCB-1221 | ug/Kg | 1,000 | | 100 | < 79 | 79 | U | 79 | < 410 | 410 | U | 410 | < 54 | 54 | U | 54 | < 77 | 77 | U | 77 | < 72 | 72 | U | 72 | | | | | | | | |
| PCB-1232 | ug/Kg | 1,000 | | 100 | < 79 | 79 | U | 79 | < 410 | 410 | U | 410 | < 54 | 54 | U | 54 | < 77 | 77 | U | 77 | < 72 | 72 | U | 72 | | | | | | | | |
| PCB-1242 | ug/Kg | 1,000 | | 100 | < 79 | 79 | U | 79 | < 410 | 410 | U | 410 | < 54 | 54 | U | 54 | < 77 | 77 | U | 77 | < 72 | 72 | U | 72 | | | | | | | | |
| PCB-1248 | ug/Kg | 1,000 | | 100 | < 79 | 79 | U | 79 | < 410 | 410 | U | 410 | < 54 | 54 | U | 54 | < 77 | 77 | U | 77 | < 72 | 72 | U | 72 | | | | | | | | |
| PCB-1254 | ug/Kg | 1,000 | | 100 | < 79 | 79 | U | 79 | < 410 | 410 | U | 410 | < 54 | 54 | U | 54 | < 77 | 77 | U | 77 | < 72 | 72 | U | 72 | | | | | | | | |
| PCB-1260 | ug/Kg | 1,000 | | 100 | < 79 | 79 | U | 79 | 1,100 | 410 | | 410 | < 54 | 54 | U | 54 | < 77 | 77 | U | 77 | < 72 | 72 | U | 72 | | | | | | | | |
| PCB-1262 | ug/Kg | | | | < 79 | 79 | U | 79 | < 410 | 410 | U | 410 | < 54 | 54 | U | 54 | < 77 | 77 | U | 77 | < 72 | 72 | U | 72 | | | | | | | | |
| PCB-1268 | ug/Kg | | | | < 79 | 79 | U | 79 | < 410 | 410 | U | 410 | < 54 | 54 | U | 54 | < 77 | 77 | U | 77 | < 72 | 72 | U | 72 | | | | | | | | |
| **Metals, Total** | | | | | | | | | | | | | | | | | | | | | | | | | | | | | | | | |
| Aluminum | mg/Kg | | | | 15,000 | 56 | | 7.4 | 8,790 | 58 | | 7.7 | 11,300 | 76 | | 10 | 8,830 | 53 | | 7.0 | 6,520 | 56 | | 7.5 | | | | | | | | |
| Antimony | mg/Kg | | | | < 3.7 | 3.7 | U | 1.9 | < 3.9 | 3.9 | U | 1.9 | < 5.1 | 5.1 | | 2.5 | < 3.5 | 3.5 | U | 1.8 | < 3.8 | 3.8 | U | 1.9 | | | | | | | | |
| Arsenic | mg/Kg | 16 | 16 | 13 | 4.3 | 0.7 | | 0.74 | 12 | 0.8 | | 0.77 | 25.1 | 1.0 | | 1.0 | 2 | 0.7 | | 0.70 | 1.5 | 0.8 | | 0.75 | | | | | | | | |
| Barium | mg/Kg | 350 | 400 | 350 | 155 | 0.37 | | 0.37 | 104 | 0.39 | | 0.39 | 1,120 | 0.51 | | 0.51 | 57.5 | 0.35 | | 0.35 | 33.2 | 0.38 | | 0.38 | | | | | | | | |
| Beryllium | mg/Kg | 14 | 72 | 7.2 | 0.46 | 0.30 | | 0.15 | < 0.31 | 0.31 | U | 0.15 | 0.46 | 0.40 | | 0.20 | 0.29 | 0.28 | | 0.14 | < 0.30 | 0.30 | U | 0.15 | | | | | | | | |
| Cadmium | mg/Kg | 2.5 | 4.3 | 2.5 | < 0.37 | 0.37 | U | 0.15 | 1.15 | 0.39 | | 0.15 | 3.12 | 0.51 | | 0.20 | < 0.35 | 0.35 | U | 0.14 | < 0.38 | 0.38 | U | 0.15 | | | | | | | | |
| Calcium | mg/Kg | | | | 13,100 | 56 | | 34 | 21,600 | 58 | | 36 | 5,090 | 7.6 | | 4.7 | 104,000 | 53 | N | 32 | 146,000 | 560 | N | 350 | | | | | | | | |
| Chromium | mg/Kg | | | 30 | 43.1 | 0.37 | | 0.37 | 36.5 | 0.39 | | 0.39 | 82 | 0.51 | | 0.51 | 21.3 | 0.35 | | 0.35 | 12.1 | 0.38 | | 0.38 | | | | | | | | |
| Cobalt | mg/Kg | | | | 12.9 | 0.37 | | 0.37 | 9.44 | 0.39 | | 0.39 | 6.72 | 0.51 | | 0.51 | 6.29 | 0.35 | | 0.35 | 4.65 | 0.38 | | 0.38 | | | | | | | | |
| Copper | mg/Kg | 270 | 270 | 50 | 34.1 | 0.37 | | 0.37 | 150 | 3.9 | | 3.9 | 69 | 0.51 | | 0.51 | 23.1 | 0.35 | | 0.35 | 15.7 | 0.38 | | 0.38 | | | | | | | | |
| Iron | mg/Kg | | | | 24,300 | 56 | | 37 | 24,900 | 58 | | 39 | 15,500 | 76 | | 51 | 13,000 | 53 | | 35 | 9,010 | 56 | | 38 | | | | | | | | |
| Lead | mg/Kg | 400 | 400 | 63 | 180 | 3.7 | | 3.7 | 419 | 3.9 | | 3.9 | 589 | 5.1 | | 5.1 | 37.1 | 0.35 | | 0.35 | 14.9 | 0.38 | | 0.38 | | | | | | | | |
| Magnesium | mg/Kg | | | | 9,350 | 56 | | 37 | 6,890 | 58 | | 39 | 3,580 | 7.6 | | 5.1 | 57,600 | 530 | | 350 | 91,300 | 560 | | 380 | | | | | | | | |
| Manganese | mg/Kg | 2,000 | 2,000 | 1,600 | 404 | 3.7 | | 3.7 | 286 | 3.9 | | 3.9 | 278 | 5.1 | | 5.1 | 192 | 3.5 | N | 3.5 | 166 | 3.8 | N | 3.8 | | | | | | | | |
| Mercury | mg/Kg | 0.81 | 0.81 | 0.18 | 0.06 | 0.03 | | 0.02 | 0.34 | 0.03 | | 0.02 | 0.29 | 0.04 | | 0.02 | < 0.03 | 0.03 | U | 0.02 | < 0.03 | 0.03 | U | 0.02 | | | | | | | | |
| Nickel | mg/Kg | 140 | 310 | 30 | 28.1 | 0.37 | | 0.37 | 28.6 | 0.39 | | 0.39 | 21.8 | 0.51 | | 0.51 | 12.7 | 0.35 | | 0.35 | 8.72 | 0.38 | | 0.38 | | | | | | | | |
| Potassium | mg/Kg | | | | 2,360 | 5.6 | N | 2.9 | 1,540 | 5.8 | N | 3.0 | 1,640 | 7.6 | N | 3.9 | 2,680 | 5.3 | N | 2.7 | 1,820 | 5.6 | N | 2.9 | | | | | | | | |
| Selenium | mg/Kg | 36 | 180 | 3.9 | < 1.5 | 1.5 | U | 1.3 | < 1.5 | 1.5 | U | 1.3 | < 2.0 | 2.0 | U | 1.7 | < 1.4 | 1.4 | U | 1.2 | < 1.5 | 1.5 | U | 1.3 | | | | | | | | |

**TABLE 5B**
**SUBSURFACE SOIL LABORATORY ANALYTICAL RESULTS SUMMARY**

**REMEDIAL INVESTIGATION**
**109-125 MARBLEDALE ROAD**
**TUCKAHOE, NEW YORK**
**BCP # C360143**

| Analyte | Lab Sample Id / Collection Date / Client Id / Matrix | | | | BH79483 3/3/2015 TB-3 (2-4) Soil | | | | BH79484 3/3/2015 TB-4 (24-26) Soil | | | | BH79485 3/3/2015 TB-4 (30-32) Soil | | | | BH82998 3/11/2015 TB-5 (0-2) Solid | | | | BH82999 3/11/2015 TB-5 (12-14) Solid | | | | BJ04209 4/16/2015 TB-6 6-8 FT Soil | | | | BJ04210 4/16/2015 TB-106 6-8 FT Soil | | | |
|---|---|---|---|---|---|---|---|---|---|---|---|---|---|---|---|---|---|---|---|---|---|---|---|---|---|---|---|---|---|---|---|---|
| | Units | NY-Res. | NY-ResRestrict | NY-UnRestricted | Result | RL | Qual | MDL | Result | RL | Qual | MDL | Result | RL | Qual | MDL | Result | RL | Qual | MDL | Result | RL | Qual | MDL | Result | RL | Qual | MDL | Result | RL | Qual | MDL |
| Silver | mg/Kg | 36 | 180 | 2 | < 0.37 | 0.37 | U | 0.37 | < 0.39 | 0.39 | U | 0.39 | < 0.51 | 0.51 | U | 0.51 | < 0.35 | 0.35 | U | 0.35 | < 0.38 | 0.38 | U | 0.38 | | | | | | | | |
| Sodium | mg/Kg | | | | 158 | 5.6 | N | 3.2 | 354 | 5.8 | N | 3.3 | 229 | 7.6 | N | 4.4 | 140 | 5.3 | | 3.0 | 78.4 | 5.6 | | 3.2 | | | | | | | | |
| Thallium | mg/Kg | | | | < 3.3 | 3.3 | U | 1.5 | < 3.5 | 3.5 | U | 1.5 | < 4.6 | 4.6 | U | 2.0 | < 3.2 | 3.2 | U | 1.4 | < 3.4 | 3.4 | U | 1.5 | | | | | | | | |
| Vanadium | mg/Kg | | | | 62.5 | 0.37 | | 0.37 | 56.4 | 0.39 | | 0.39 | 80.5 | 0.51 | | 0.51 | 25.7 | 0.35 | | 0.35 | 16.3 | 0.38 | | 0.38 | | | | | | | | |
| Zinc | mg/Kg | 2,200 | 10,000 | 109 | 258 | 3.7 | | 3.7 | 342 | 3.9 | | 3.9 | 216 | 5.1 | | 5.1 | 65.6 | 0.35 | | 0.35 | 55.2 | 0.38 | | 0.38 | | | | | | | | |
| **Miscellaneous/Inorganics** | | | | | | | | | | | | | | | | | | | | | | | | | | | | | | | | |
| Percent Solid | % | | | | 82 | | | | 79 | | | | 61 | | | | 84 | | | | 91 | | | | | | | | | | | |
| Total Cyanide | mg/Kg | | | | < 0.55 | 0.55 | U | 0.28 | < 0.63 | 0.63 | U | 0.32 | < 0.82 | 0.82 | U | 0.41 | < 0.60 | 0.60 | U | 0.30 | 1.49 | 0.55 | | 0.27 | | | | | | | | |

Result Detected

RL Exceeds Criteria

Result Exceeds Criteria

| | |
|---|---|
| U | The compound was anlayzed for but not detected at or above the MDL. The number immediately preceding the "U" represents the PQL reporting level corrected for percent solids, weight and/or volume calculations, and dilution factors. |
| J | The value is estimated. This flag is used a) on form 1 when the compound is reported above the MDL, but below the PQL, and b) on the Tentatively Identified Compounds (TIC) form for all compounds identified. |
| N | The concentration is based on the response fo the nearest internal. This flag is used on the TIC form for all compounds identified. |
| S | This compound is a solvent that is used in the laboratory. Laboratory contamination is suspected if concentration is less than five times the reporting level. |
| D | The reported concentration is the result of a diluted analysis. |
| (*) | See report for comment. |

**TABLE 5C**
**SUBSURFACE SOIL LABORATORY ANALYTICAL RESULTS SUMMARY**

**REMEDIAL INVESTIGATION**
**109-125 MARBLEDALE ROAD**
**TUCKAHOE, NEW YORK**
**BCP # C360143**

| Analyte | Lab Sample Id / Collection Date / Client Id / Matrix | | | | BJ04211 4/16/2015 TB-6 4-8 FT Soil | | | | BJ04212 4/16/2015 TB-106 4-8 FT Soil | | | | BJ04213 4/16/2015 TB-6 26-28 FT Soil | | | | BH83000 3/11/2015 TB-7 (6-8) Solid | | | | BH83001 3/11/2015 TB-7 (10-12) Solid | | | | BH78388 2/27/2015 TB-8 2-4 Solid | | | | BH78389 2/27/2015 TB-8 20-22 Solid | | | |
|---|---|---|---|---|---|---|---|---|---|---|---|---|---|---|---|---|---|---|---|---|---|---|---|---|---|---|---|---|---|---|---|---|
| | Units | NY-Res. | NY-ResRestrict | NY-UnRestricted | Result | RL | Qual | MDL | Result | RL | Qual | MDL | Result | RL | Qual | MDL | Result | RL | Qual | MDL | Result | RL | Qual | MDL | Result | RL | Qual | MDL | Result | RL | Qual | MDL |
| Volatiles (TCL) By SW8260C | | | | | | | | | | | | | | | | | | | | | | | | | | | | | | | | |
| 1,1,1-Trichloroethane | ug/kg | 100,000 | 100,000 | 680 | | | | | | | | | | | | | < 7.6 | 7.6 | U | 0.76 | < 5.8 | 5.8 | U | 0.58 | < 5.6 | 5.6 | U | 0.56 | < 4.3 | 4.3 | U | 0.43 |
| 1,1,2,2-Tetrachloroethane | ug/kg | | | | | | | | | | | | | | | | < 7.6 | 7.6 | U | 1.5 | < 5.8 | 5.8 | U | 1.2 | < 5.6 | 5.6 | U | 1.1 | < 4.3 | 4.3 | U | 0.87 |
| 1,1,2-Trichloroethane | ug/kg | | | | | | | | | | | | | | | | < 7.6 | 7.6 | U | 1.5 | < 5.8 | 5.8 | U | 1.2 | < 5.6 | 5.6 | U | 1.1 | < 4.3 | 4.3 | U | 0.87 |
| 1,1-Dichloroethane | ug/kg | 19,000 | 26,000 | 270 | | | | | | | | | | | | | < 7.6 | 7.6 | U | 1.5 | < 5.8 | 5.8 | U | 1.2 | < 5.6 | 5.6 | U | 1.1 | < 4.3 | 4.3 | U | 0.87 |
| 1,1-Dichloroethene | ug/kg | 100,000 | 100,000 | 330 | | | | | | | | | | | | | < 7.6 | 7.6 | U | 0.76 | < 5.8 | 5.8 | U | 0.58 | < 5.6 | 5.6 | U | 0.56 | < 4.3 | 4.3 | U | 0.43 |
| 1,2,3-Trichlorobenzene | ug/kg | | | | | | | | | | | | | | | | < 290 | 290 | U | 62 | < 5.8 | 5.8 | U | 1.2 | < 5.6 | 5.6 | U | 1.1 | < 4.3 | 4.3 | U | 0.87 |
| 1,2,4-Trichlorobenzene | ug/kg | | | | | | | | | | | | | | | | < 290 | 290 | U | 62 | < 5.8 | 5.8 | U | 1.2 | < 5.6 | 5.6 | U | 1.1 | < 4.3 | 4.3 | U | 0.87 |
| 1,2-Dibromo-3-chloropropane | ug/kg | | | | | | | | | | | | | | | | < 290 | 290 | U | 62 | < 5.8 | 5.8 | U | 1.2 | < 5.6 | 5.6 | U | 1.1 | < 4.3 | 4.3 | U | 0.87 |
| 1,2-Dibromoethane | ug/kg | | | | | | | | | | | | | | | | < 7.6 | 7.6 | U | 0.76 | < 5.8 | 5.8 | U | 0.58 | < 5.6 | 5.6 | U | 0.56 | < 4.3 | 4.3 | U | 0.43 |
| 1,2-Dichlorobenzene | ug/kg | 100,000 | 100,000 | 1,100 | | | | | | | | | | | | | < 290 | 290 | U | 31 | < 5.8 | 5.8 | U | 0.58 | < 5.6 | 5.6 | U | 0.56 | < 4.3 | 4.3 | U | 0.43 |
| 1,2-Dichloroethane | ug/kg | 2,300 | 3,100 | 20 | | | | | | | | | | | | | < 7.6 | 7.6 | U | 0.76 | < 5.8 | 5.8 | U | 0.58 | < 5.6 | 5.6 | U | 0.56 | < 4.3 | 4.3 | U | 0.43 |
| 1,2-Dichloropropane | ug/kg | | | | | | | | | | | | | | | | < 7.6 | 7.6 | U | 1.5 | < 5.8 | 5.8 | U | 1.2 | < 5.6 | 5.6 | U | 1.1 | < 4.3 | 4.3 | U | 0.87 |
| 1,3-Dichlorobenzene | ug/kg | 17,000 | 49,000 | 2,400 | | | | | | | | | | | | | < 290 | 290 | U | 31 | < 5.8 | 5.8 | U | 0.58 | < 5.6 | 5.6 | U | 0.56 | < 4.3 | 4.3 | U | 0.43 |
| 1,4-Dichlorobenzene | ug/kg | 9,800 | 13,000 | 1,800 | | | | | | | | | | | | | < 290 | 290 | U | 31 | < 5.8 | 5.8 | JD | 32 | < 5.6 | 5.6 | U | 0.56 | < 4.3 | 4.3 | U | 0.43 |
| 2-Hexanone | ug/kg | | | | | | | | | | | | | | | | < 38 | 38 | U | 7.6 | < 50 | 50 | | 5.8 | < 28 | 28 | U | 5.6 | < 22 | 22 | U | 4.3 |
| 4-Methyl-2-pentanone | ug/kg | | | | | | | | | | | | | | | | < 38 | 38 | U | 7.6 | < 29 | 29 | U | 5.8 | < 28 | 28 | U | 5.6 | < 22 | 22 | U | 4.3 |
| Acetone | ug/kg | 100,000 | 100,000 | 50 | | | | | | | | | | | | | < 50 | 50 | BS | 7.6 | < 50 | 50 | BS | 5.8 | < 50 | 50 | JS | 5.6 | < 43 | 43 | JS | 4.3 |
| Benzene | ug/kg | 2,900 | 4,800 | 60 | | | | | | | | | | | | | < 7.6 | 7.6 | J | 0.76 | 22 | 5.8 | JD | 32 | < 5.6 | 5.6 | U | 0.56 | < 4.3 | 4.3 | U | 0.43 |
| Bromochloromethane | ug/kg | | | | | | | | | | | | | | | | < 7.6 | 7.6 | U | 0.76 | < 5.8 | 5.8 | U | 0.58 | < 5.6 | 5.6 | U | 0.56 | < 4.3 | 4.3 | U | 0.43 |
| Bromodichloromethane | ug/kg | | | | | | | | | | | | | | | | < 7.6 | 7.6 | U | 1.5 | < 5.8 | 5.8 | U | 1.2 | < 5.6 | 5.6 | U | 1.1 | < 4.3 | 4.3 | U | 0.87 |
| Bromoform | ug/kg | | | | | | | | | | | | | | | | < 7.6 | 7.6 | U | 1.5 | < 5.8 | 5.8 | U | 1.2 | < 5.6 | 5.6 | U | 1.1 | < 4.3 | 4.3 | U | 0.87 |
| Bromomethane | ug/kg | | | | | | | | | | | | | | | | < 7.6 | 7.6 | U | 3.0 | < 5.8 | 5.8 | U | 2.3 | < 5.6 | 5.6 | U | 2.2 | < 4.3 | 4.3 | U | 1.7 |
| Carbon Disulfide | ug/kg | | | | | | | | | | | | | | | | < 7.6 | 7.6 | J | 1.5 | 6.8 | 5.8 | | 1.2 | < 5.6 | 5.6 | U | 1.1 | < 4.3 | 4.3 | U | 0.87 |
| Carbon tetrachloride | ug/kg | 1,400 | 2,400 | 760 | | | | | | | | | | | | | < 7.6 | 7.6 | U | 1.5 | < 5.8 | 5.8 | U | 1.2 | < 5.6 | 5.6 | U | 1.1 | < 4.3 | 4.3 | U | 0.87 |
| Chlorobenzene | ug/kg | 100,000 | 100,000 | 1,100 | | | | | | | | | | | | | < 7.6 | 7.6 | U | 0.76 | < 5.8 | 5.8 | U | 0.58 | < 5.6 | 5.6 | U | 5.6 | < 4.3 | 4.3 | U | 280 |
| Chloroethane | ug/kg | | | | | | | | | | | | | | | | < 7.6 | 7.6 | U | 0.76 | < 5.8 | 5.8 | U | 0.58 | < 5.6 | 5.6 | U | 0.56 | < 4.3 | 4.3 | U | 0.43 |
| Chloroform | ug/kg | 10,000 | 49,000 | 370 | | | | | | | | | | | | | < 7.6 | 7.6 | J | 0.76 | < 5.8 | 5.8 | J | 0.58 | < 5.6 | 5.6 | U | 0.56 | < 4.3 | 4.3 | U | 0.43 |
| Chloromethane | ug/kg | | | | | | | | | | | | | | | | < 7.6 | 7.6 | U | 1.5 | < 5.8 | 5.8 | U | 1.2 | < 5.6 | 5.6 | U | 1.1 | < 4.3 | 4.3 | U | 0.87 |
| cis-1,2-Dichloroethene | ug/kg | 59,000 | 100,000 | 250 | | | | | | | | | | | | | < 7.6 | 7.6 | U | 0.76 | < 5.8 | 5.8 | U | 0.58 | < 5.6 | 5.6 | U | 0.56 | < 4.3 | 4.3 | U | 0.43 |
| cis-1,3-Dichloropropene | ug/kg | | | | | | | | | | | | | | | | < 7.6 | 7.6 | U | 0.76 | < 5.8 | 5.8 | U | 0.58 | < 5.6 | 5.6 | U | 0.56 | < 4.3 | 4.3 | U | 0.43 |
| Cyclohexane | ug/kg | | | | | | | | | | | | | | | | < 7.6 | 7.6 | U | 1.5 | < 5.8 | 5.8 | J | 1.2 | < 5.6 | 5.6 | U | 1.1 | < 4.3 | 4.3 | U | 0.87 |
| Dibromochloromethane | ug/kg | | | | | | | | | | | | | | | | < 7.6 | 7.6 | U | 1.5 | < 5.8 | 5.8 | U | 1.2 | < 5.6 | 5.6 | U | 1.1 | < 4.3 | 4.3 | U | 0.87 |
| Dichlorodifluoromethane | ug/kg | | | | | | | | | | | | | | | | 420 | 7.6 | E | 0.76 | 390 | 320 | | 0.58 | < 5.6 | 5.6 | U | 0.56 | < 4.3 | 4.3 | U | 0.43 |
| Ethylbenzene | ug/kg | 30,000 | 41,000 | 1,000 | | | | | | | | | | | | | 23 | 7.6 | | 0.76 | < 5.8 | 5.8 | JD | 32 | < 5.6 | 5.6 | U | 0.56 | < 4.3 | 4.3 | U | 0.43 |
| Isopropylbenzene | ug/kg | | | | | | | | | | | | | | | | < 290 | 290 | U | 31 | < 5.8 | 5.8 | J | 0.58 | < 5.6 | 5.6 | U | 0.56 | < 4.3 | 4.3 | U | 0.43 |
| m&p-Xylene | ug/kg | | | | | | | | | | | | | | | | 21 | 7.6 | | 1.5 | 31 | 5.8 | JD | 65 | < 5.6 | 5.6 | U | 1.1 | < 4.3 | 4.3 | U | 0.87 |
| Methyl ethyl ketone | ug/kg | 100,000 | 100,000 | 120 | | | | | | | | | | | | | < 46 | 46 | U | 7.6 | < 40 | 40 | | 5.8 | < 33 | 33 | U | 5.6 | < 26 | 26 | U | 4.3 |
| Methyl t-butyl ether (MTBE) | ug/kg | 62,000 | 100,000 | 930 | | | | | | | | | | | | | < 15 | 15 | U | 1.5 | < 12 | 12 | U | 1.2 | < 11 | 11 | U | 1.1 | < 8.7 | 8.7 | U | 0.87 |
| Methylacetate | ug/kg | | | | | | | | | | | | | | | | < 24 | 24 | | 3.8 | < 15 | 15 | U | 2.9 | < 4.4 | 4.4 | U | 2.8 | < 3.5 | 3.5 | U | 2.2 |
| Methylcyclohexane | ug/kg | | | | | | | | | | | | | | | | < 7.6 | 7.6 | J | 1.5 | < 5.8 | 5.8 | J | 1.2 | < 5.6 | 5.6 | U | 1.1 | < 4.3 | 4.3 | U | 0.87 |
| Methylene chloride | ug/kg | 51,000 | 100,000 | 50 | | | | | | | | | | | | | < 7.6 | 7.6 | U | 7.6 | < 5.8 | 5.8 | U | 5.8 | < 5.6 | 5.6 | U | 5.6 | < 4.3 | 4.3 | U | 4.3 |
| o-Xylene | ug/kg | | | | | | | | | | | | | | | | 10 | 7.6 | | 1.5 | 16 | 5.8 | JD | 65 | < 5.6 | 5.6 | U | 1.1 | < 4.3 | 4.3 | U | 0.87 |
| Styrene | ug/kg | | | | | | | | | | | | | | | | < 7.6 | 7.6 | U | 0.76 | < 5.8 | 5.8 | U | 0.58 | < 5.6 | 5.6 | U | 0.56 | < 4.3 | 4.3 | U | 0.43 |
| Tetrachloroethene | ug/kg | 5,500 | 19,000 | 1,300 | | | | | | | | | | | | | < 7.6 | 7.6 | J | 1.5 | < 5.8 | 5.8 | J | 1.2 | < 5.6 | 5.6 | U | 1.1 | < 4.3 | 4.3 | J | 0.87 |
| Toluene | ug/kg | 100,000 | 100,000 | 700 | | | | | | | | | | | | | 420 | 310 | D | 31 | 770 | 320 | D | 32 | < 5.6 | 5.6 | U | 0.56 | < 4.3 | 4.3 | U | 0.43 |
| Total Xylenes | ug/kg | | 100,000 | 260 | | | | | | | | | | | | | 31 | 7.6 | | 1.5 | 47 | 5.8 | | 65 | < 5.6 | 5.6 | U | 1.1 | < 4.3 | 4.3 | U | 0.87 |
| trans-1,2-Dichloroethene | ug/kg | 100,000 | 100,000 | 190 | | | | | | | | | | | | | < 7.6 | 7.6 | U | 0.76 | < 5.8 | 5.8 | U | 0.58 | < 5.6 | 5.6 | U | 0.56 | < 4.3 | 4.3 | U | 0.43 |
| trans-1,3-Dichloropropene | ug/kg | | | | | | | | | | | | | | | | < 7.6 | 7.6 | U | 0.76 | < 5.8 | 5.8 | U | 0.58 | < 5.6 | 5.6 | U | 0.56 | < 4.3 | 4.3 | U | 0.43 |
| Trichloroethene | ug/kg | 10,000 | 21,000 | 470 | | | | | | | | | | | | | < 7.6 | 7.6 | U | 0.76 | < 5.8 | 5.8 | U | 0.58 | 330 | 290 | D | 29 | < 4.3 | 4.3 | U | 0.43 |
| Trichlorofluoromethane | ug/kg | | | | | | | | | | | | | | | | 75 | 7.6 | | 1.5 | 46 | 5.8 | | 1.2 | < 5.6 | 5.6 | U | 1.1 | < 10 | 10 | | 0.87 |
| Trichlorotrifluoroethane | ug/kg | | | | | | | | | | | | | | | | < 7.6 | 7.6 | U | 0.76 | < 5.8 | 5.8 | U | 0.58 | < 5.6 | 5.6 | U | 0.56 | < 4.3 | 4.3 | U | 0.43 |
| Vinyl chloride | ug/kg | 210 | 900 | 20 | | | | | | | | | | | | | < 7.6 | 7.6 | U | 0.76 | < 5.8 | 5.8 | J | 0.58 | < 5.6 | 5.6 | U | 0.56 | < 4.3 | 4.3 | U | 0.43 |

**TABLE 5C**
**SUBSURFACE SOIL LABORATORY ANALYTICAL RESULTS SUMMARY**

**REMEDIAL INVESTIGATION**
**109-125 MARBLEDALE ROAD**
**TUCKAHOE, NEW YORK**
**BCP # C360143**

| Analyte | Lab Sample Id<br>Collection Date<br>Client Id<br>Matrix | | | | BJ04211<br>4/16/2015<br>TB-6 4-8 FT<br>Soil | | | | BJ04212<br>4/16/2015<br>TB-106 4-8 FT<br>Soil | | | | BJ04213<br>4/16/2015<br>TB-6 26-28 FT<br>Soil | | | | BH83000<br>3/11/2015<br>TB-7 (6-8)<br>Solid | | | | BH83001<br>3/11/2015<br>TB-7 (10-12)<br>Solid | | | | BH78388<br>2/27/2015<br>TB-8 2-4<br>Solid | | | | BH78389<br>2/27/2015<br>TB-8 20-22<br>Solid | | | |
|---|---|---|---|---|---|---|---|---|---|---|---|---|---|---|---|---|---|---|---|---|---|---|---|---|---|---|---|---|---|---|---|---|
| | Units | NY-Res. | NY-ResRestrict | NY-UnRestricted | Result | RL | Qual | MDL | Result | RL | Qual | MDL | Result | RL | Qual | MDL | Result | RL | Qual | MDL | Result | RL | Qual | MDL | Result | RL | Qual | MDL | Result | RL | Qual | MDL |
| **1,4-dioxane By SW8260C** | | | | | | | | | | | | | | | | | | | | | | | | | | | | | | | | |
| 1,4-dioxane | ug/kg | 9,800 | 13,000 | 100 | | | | | | | | | | | | | < 100 | 100 | U | 61 | < 100 | 100 | U | 47 | < 100 | 100 | U | 100 | < 87 | 87 | U | 87 |
| **Semivolatiles By SW8270D** | | | | | | | | | | | | | | | | | | | | | | | | | | | | | | | | |
| 1,1-Biphenyl | ug/Kg | | | | < 530 | 530 | U | 230 | < 510 | 510 | U | 220 | < 540 | 540 | U | 240 | < 560 | 560 | U | 1200 | < 570 | 570 | U | 250 | < 260 | 260 | U | 110 | < 260 | 260 | U | 110 |
| 1,2,4,5-Tetrachlorobenzene | ug/Kg | | | | < 530 | 530 | U | 270 | < 510 | 510 | U | 260 | < 540 | 540 | U | 270 | < 560 | 560 | U | 1400 | < 570 | 570 | U | 290 | < 260 | 260 | U | 130 | < 260 | 260 | U | 130 |
| 2,3,4,6-tetrachlorophenol | ug/Kg | | | | < 530 | 530 | U | 360 | < 510 | 510 | U | 340 | < 540 | 540 | U | 360 | < 560 | 560 | U | 1900 | < 570 | 570 | U | 380 | < 260 | 260 | U | 170 | < 260 | 260 | U | 170 |
| 2,4,5-Trichlorophenol | ug/Kg | | | | < 530 | 530 | U | 420 | < 510 | 510 | U | 400 | < 540 | 540 | U | 430 | < 560 | 560 | U | 2200 | < 570 | 570 | U | 450 | < 260 | 260 | U | 200 | < 260 | 260 | U | 200 |
| 2,4,6-Trichlorophenol | ug/Kg | | | | < 310 | 310 | U | 240 | < 290 | 290 | U | 230 | < 310 | 310 | U | 250 | < 560 | 560 | U | 1300 | < 570 | 570 | U | 260 | < 260 | 260 | U | 120 | < 260 | 260 | U | 120 |
| 2,4-Dichlorophenol | ug/Kg | | | | < 310 | 310 | U | 270 | < 290 | 290 | U | 260 | < 310 | 310 | U | 270 | < 560 | 560 | U | 1400 | < 570 | 570 | U | 290 | < 260 | 260 | U | 130 | < 260 | 260 | U | 130 |
| 2,4-Dimethylphenol | ug/Kg | | | | < 530 | 530 | U | 190 | < 510 | 510 | U | 180 | < 540 | 540 | U | 190 | < 560 | 560 | U | 990 | < 570 | 570 | U | 200 | < 260 | 260 | U | 92 | < 260 | 260 | U | 90 |
| 2,4-Dinitrophenol | ug/Kg | | | | < 530 | 530 | U | 530 | < 510 | 510 | U | 510 | < 540 | 540 | U | 540 | < 1300 | 1,300 | U | 2800 | < 1300 | 1,300 | U | 570 | < 590 | 590 | U | 260 | < 580 | 580 | U | 260 |
| 2,4-Dinitrotoluene | ug/Kg | | | | < 310 | 310 | U | 300 | < 290 | 290 | U | 290 | < 310 | 310 | U | 310 | < 560 | 560 | U | 1600 | < 570 | 570 | U | 320 | < 260 | 260 | U | 150 | < 260 | 260 | U | 140 |
| 2,6-Dinitrotoluene | ug/Kg | | | | < 310 | 310 | U | 240 | < 290 | 290 | U | 230 | < 310 | 310 | U | 250 | < 560 | 560 | U | 1300 | < 570 | 570 | U | 260 | < 260 | 260 | U | 120 | < 260 | 260 | U | 120 |
| 2-Chloronaphthalene | ug/Kg | | | | < 530 | 530 | U | 220 | < 510 | 510 | U | 210 | < 540 | 540 | U | 220 | < 560 | 560 | U | 1100 | < 570 | 570 | U | 230 | < 260 | 260 | U | 110 | < 260 | 260 | U | 100 |
| 2-Chlorophenol | ug/Kg | | | | < 530 | 530 | U | 220 | < 510 | 510 | U | 210 | < 540 | 540 | U | 220 | < 560 | 560 | U | 1100 | < 570 | 570 | U | 230 | < 260 | 260 | U | 110 | < 260 | 260 | U | 100 |
| 2-Methylnaphthalene | ug/Kg | | | | 310 | 530 | J | 230 | < 510 | 510 | U | 220 | 450 | 540 | J | 230 | < 560 | 560 | U | 1200 | < 570 | 570 | J | 240 | < 260 | 260 | U | 110 | < 260 | 260 | U | 110 |
| 2-Methylphenol (o-cresol) | ug/Kg | 100,000 | 100,000 | 330 | < 530 | 530 | U | 360 | < 330 | 330 | U | 340 | < 330 | 330 | U | 360 | < 330 | 330 | U | 1900 | < 330 | 330 | U | 380 | < 260 | 260 | U | 170 | < 260 | 260 | U | 170 |
| 2-Nitroaniline | ug/Kg | | | | < 3800 | 3,800 | U | 770 | < 3700 | 3,700 | U | 740 | < 3900 | 3,900 | U | 780 | < 1300 | 1,300 | U | 4000 | < 1300 | 1,300 | U | 830 | < 590 | 590 | U | 370 | < 580 | 580 | U | 370 |
| 2-Nitrophenol | ug/Kg | | | | < 530 | 530 | U | 480 | < 510 | 510 | U | 460 | < 540 | 540 | U | 490 | < 560 | 560 | U | 2500 | < 570 | 570 | U | 520 | < 260 | 260 | U | 230 | < 260 | 260 | U | 230 |
| 3&4-Methylphenol (m&p-cresol) | ug/Kg | | | | 680 | 530 | | 300 | 570 | 510 | | 290 | 490 | 540 | J | 310 | < 800 | 800 | U | 1600 | 1,200 | 820 | | 320 | < 370 | 370 | U | 150 | < 360 | 360 | U | 140 |
| 3,3'-Dichlorobenzidine | ug/Kg | | | | < 310 | 310 | U | 310 | < 290 | 290 | U | 290 | < 310 | 310 | U | 310 | < 960 | 960 | U | 1600 | < 980 | 980 | U | 330 | < 440 | 440 | U | 150 | < 440 | 440 | U | 150 |
| 3-Nitroaniline | ug/Kg | | | | < 3800 | 3,800 | U | 1700 | < 3700 | 3,700 | U | 1600 | < 3900 | 3,900 | U | 1700 | < 1300 | 1,300 | U | 8700 | < 1300 | 1,300 | U | 1800 | < 590 | 590 | U | 800 | < 580 | 580 | U | 790 |
| 4,6-Dinitro-2-methylphenol | ug/Kg | | | | < 530 | 530 | U | 530 | < 510 | 510 | U | 510 | < 540 | 540 | U | 540 | < 2300 | 2,300 | U | 2800 | < 2400 | 2,400 | U | 570 | < 1100 | 1,100 | U | 260 | < 1100 | 1,100 | U | 260 |
| 4-Bromophenyl phenyl ether | ug/Kg | | | | < 530 | 530 | U | 220 | < 510 | 510 | U | 210 | < 540 | 540 | U | 230 | < 800 | 800 | U | 1200 | < 820 | 820 | U | 240 | < 370 | 370 | U | 110 | < 360 | 360 | U | 110 |
| 4-Chloro-3-methylphenol | ug/Kg | | | | < 530 | 530 | U | 270 | < 510 | 510 | U | 260 | < 540 | 540 | U | 270 | < 560 | 560 | U | 1400 | < 570 | 570 | U | 290 | < 260 | 260 | U | 130 | < 260 | 260 | U | 130 |
| 4-Chloroaniline | ug/Kg | | | | < 1500 | 1,500 | U | 360 | < 1500 | 1,500 | U | 340 | < 1600 | 1,600 | U | 360 | < 560 | 560 | U | 1900 | < 570 | 570 | U | 380 | < 260 | 260 | U | 170 | < 260 | 260 | U | 170 |
| 4-Chlorophenyl phenyl ether | ug/Kg | | | | < 530 | 530 | U | 260 | < 510 | 510 | U | 250 | < 540 | 540 | U | 260 | < 560 | 560 | U | 1300 | < 570 | 570 | U | 280 | < 260 | 260 | U | 120 | < 260 | 260 | U | 120 |
| 4-Nitroaniline | ug/Kg | | | | < 3800 | 3,800 | U | 260 | < 3700 | 3,700 | U | 240 | < 3900 | 3,900 | U | 260 | < 1300 | 1,300 | U | 1300 | < 1300 | 1,300 | U | 270 | < 590 | 590 | U | 120 | < 580 | 580 | U | 120 |
| 4-Nitrophenol | ug/Kg | | | | < 530 | 530 | U | 350 | < 510 | 510 | U | 330 | < 540 | 540 | U | 350 | < 2300 | 2,300 | U | 1800 | < 2400 | 2,400 | U | 370 | < 1100 | 1,100 | U | 170 | < 1100 | 1,100 | U | 160 |
| Acenaphthene | ug/Kg | 100,000 | 100,000 | 20,000 | 790 | 530 | | 230 | 350 | 510 | J | 220 | < 540 | 540 | U | 240 | < 560 | 560 | U | 1200 | < 570 | 570 | U | 250 | < 260 | 260 | U | 110 | < 260 | 260 | U | 110 |
| Acenaphthylene | ug/Kg | 100,000 | 100,000 | 100,000 | < 310 | 310 | U | 210 | < 290 | 290 | U | 200 | < 310 | 310 | U | 220 | < 560 | 560 | U | 1100 | < 570 | 570 | U | 230 | < 260 | 260 | U | 100 | < 260 | 260 | U | 100 |
| Acetophenone | ug/Kg | | | | < 530 | 530 | U | 240 | < 510 | 510 | U | 230 | < 540 | 540 | U | 240 | < 560 | 560 | U | 1200 | < 570 | 570 | U | 260 | < 260 | 260 | U | 120 | < 260 | 260 | U | 110 |
| Anthracene | ug/Kg | 100,000 | 100,000 | 100,000 | 1,600 | 530 | | 250 | 780 | 510 | | 240 | 300 | 540 | J | 250 | < 560 | 560 | U | 1300 | < 570 | 570 | J | 270 | < 260 | 260 | U | 120 | < 260 | 260 | U | 120 |
| Atrazine | ug/Kg | | | | < 310 | 310 | U | 310 | < 290 | 290 | U | 290 | < 310 | 310 | U | 310 | < 560 | 560 | U | 1600 | < 570 | 570 | U | 330 | < 260 | 260 | U | 150 | < 260 | 260 | U | 150 |
| Benz(a)anthracene | ug/Kg | 1,000 | 1,000 | 1,000 | 2,700 | 530 | | 260 | 1,400 | 510 | | 250 | 650 | 540 | | 260 | 590 | 560 | U | 1300 | < 570 | 570 | J | 280 | 270 | 260 | | 120 | < 260 | 260 | U | 120 |
| Benzaldehyde | ug/Kg | | | | < 530 | 530 | U | 230 | < 510 | 510 | U | 220 | < 540 | 540 | U | 230 | < 560 | 560 | U | 1200 | < 570 | 570 | U | 240 | < 260 | 260 | U | 110 | < 260 | 260 | U | 110 |
| Benzo(a)pyrene | ug/Kg | 1,000 | 1,000 | 1,000 | 2,400 | 310 | | 250 | 1,200 | 290 | | 240 | 660 | 310 | | 250 | < 560 | 560 | U | 1300 | < 570 | 570 | | 270 | 260 | 260 | | 120 | < 260 | 260 | U | 120 |
| Benzo(b)fluoranthene | ug/Kg | 1,000 | 1,000 | 1,000 | 2,700 | 530 | | 260 | 1,400 | 510 | | 250 | 970 | 540 | | 270 | < 560 | 560 | U | 1400 | 590 | 570 | | 280 | 350 | 260 | | 130 | < 260 | 260 | U | 120 |
| Benzo(ghi)perylene | ug/Kg | 100,000 | 100,000 | 100,000 | 1,500 | 530 | | 250 | 740 | 510 | | 240 | < 540 | 540 | U | 250 | < 560 | 560 | U | 1300 | < 570 | 570 | U | 270 | < 260 | 260 | J | 120 | < 260 | 260 | U | 120 |
| Benzo(k)fluoranthene | ug/Kg | 1,000 | 3,900 | 800 | 990 | 530 | | 250 | 550 | 510 | | 240 | 290 | 540 | J | 260 | < 560 | 560 | U | 1300 | < 570 | 570 | J | 270 | < 260 | 260 | J | 120 | < 260 | 260 | U | 120 |
| Benzyl butyl phthalate | ug/Kg | | | | < 530 | 530 | U | 200 | < 510 | 510 | U | 190 | < 540 | 540 | U | 200 | < 560 | 560 | U | 1000 | < 570 | 570 | U | 210 | < 260 | 260 | U | 95 | < 260 | 260 | U | 94 |
| Bis(2-chloroethoxy)methane | ug/Kg | | | | < 530 | 530 | U | 210 | < 510 | 510 | U | 200 | < 540 | 540 | U | 210 | < 560 | 560 | U | 1100 | < 570 | 570 | U | 230 | < 260 | 260 | U | 100 | < 260 | 260 | U | 100 |
| Bis(2-chloroethyl)ether | ug/Kg | | | | < 310 | 310 | U | 210 | < 290 | 290 | U | 200 | < 310 | 310 | U | 210 | < 800 | 800 | U | 1100 | < 820 | 820 | U | 220 | < 370 | 370 | U | 100 | < 360 | 360 | U | 98 |
| Bis(2-chloroisopropyl)ether | ug/Kg | | | | < 530 | 530 | U | 210 | < 510 | 510 | U | 200 | < 540 | 540 | U | 220 | < 560 | 560 | U | 1100 | < 570 | 570 | U | 230 | < 260 | 260 | U | 100 | < 260 | 260 | U | 100 |
| Bis(2-ethylhexyl)phthalate | ug/Kg | | | | 280 | 530 | J | 220 | < 510 | 510 | U | 210 | < 540 | 540 | U | 220 | 640 | 560 | U | 1100 | 900 | 570 | | 240 | 900 | 260 | | 110 | 290 | 260 | | 100 |
| Caprolactam | ug/Kg | | | | < 530 | 530 | U | 530 | < 510 | 510 | U | 510 | < 540 | 540 | U | 540 | < 560 | 560 | U | 2800 | < 570 | 570 | U | 570 | < 260 | 260 | U | 260 | < 260 | 260 | U | 260 |
| Carbazole | ug/Kg | | | | < 3800 | 3,800 | U | 580 | < 3700 | 3,700 | U | 550 | < 3900 | 3,900 | U | 590 | < 2300 | 2,300 | U | 3000 | < 2400 | 2,400 | U | 620 | < 1100 | 1,100 | U | 280 | < 1100 | 1,100 | U | 280 |
| Chrysene | ug/Kg | 1,000 | 3,900 | 1,000 | 2,600 | 530 | | 260 | 1,300 | 510 | | 250 | 590 | 540 | | 260 | < 560 | 560 | U | 1300 | 580 | 570 | | 280 | 300 | 260 | | 120 | < 260 | 260 | U | 120 |
| Dibenz(a,h)anthracene | ug/Kg | 330 | 330 | 330 | 390 | 310 | | 250 | < 290 | 290 | U | 240 | < 310 | 310 | U | 250 | < 330 | 330 | U | 1300 | < 330 | 330 | U | 270 | < 260 | 260 | U | 120 | < 260 | 260 | U | 120 |
| Dibenzofuran | ug/Kg | | | 7,000 | 540 | 530 | | 220 | 250 | 510 | J | 210 | < 540 | 540 | U | 230 | < 560 | 560 | U | 1200 | < 570 | 570 | U | 240 | < 260 | 260 | U | 110 | < 260 | 260 | U | 110 |
| Diethyl phthalate | ug/Kg | | | | < 530 | 530 | U | 240 | < 510 | 510 | U | 230 | < 540 | 540 | U | 250 | < 560 | 560 | U | 1300 | < 570 | 570 | U | 260 | < 260 | 260 | U | 120 | < 260 | 260 | U | 120 |
| Dimethylphthalate | ug/Kg | | | | < 530 | 530 | U | 240 | < 510 | 510 | U | 230 | < 540 | 540 | U | 240 | < 560 | 560 | U | 1200 | < 570 | 570 | U | 250 | < 260 | 260 | U | 110 | < 260 | 260 | U | 110 |
| Di-n-butylphthalate | ug/Kg | | | | < 530 | 530 | U | 200 | < 510 | 510 | U | 190 | < 540 | 540 | U | 210 | < 560 | 560 | U | 1100 | < 570 | 570 | U | 220 | < 260 | 260 | U | 98 | < 260 | 260 | U | 97 |

**TABLE 5C**
**SUBSURFACE SOIL LABORATORY ANALYTICAL RESULTS SUMMARY**

**REMEDIAL INVESTIGATION**
**109-125 MARBLEDALE ROAD**
**TUCKAHOE, NEW YORK**
**BCP # C360143**

| Analyte | Lab Sample Id<br>Collection Date<br>Client Id<br>Matrix | | | | BJ04211<br>4/16/2015<br>TB-6 4-8 FT<br>Soil | | | | BJ04212<br>4/16/2015<br>TB-106 4-8 FT<br>Soil | | | | BJ04213<br>4/16/2015<br>TB-6 26-28 FT<br>Soil | | | | BH83000<br>3/11/2015<br>TB-7 (6-8)<br>Solid | | | | BH83001<br>3/11/2015<br>TB-7 (10-12)<br>Solid | | | | BH78388<br>2/27/2015<br>TB-8 2-4<br>Solid | | | | BH78389<br>2/27/2015<br>TB-8 20-22<br>Solid | | | |
|---|---|---|---|---|---|---|---|---|---|---|---|---|---|---|---|---|---|---|---|---|---|---|---|---|---|---|---|---|---|---|---|---|
| | Units | NY-Res. | NY-ResRestrict | NY-UnRestricted | Result | RL | Qual | MDL | Result | RL | Qual | MDL | Result | RL | Qual | MDL | Result | RL | Qual | MDL | Result | RL | Qual | MDL | Result | RL | Qual | MDL | Result | RL | Qual | MDL |
| Di-n-octylphthalate | ug/Kg | | | | < 530 | 530 | U | 200 | < 510 | 510 | U | 190 | < 540 | 540 | U | 200 | < 560 | 560 | U | 1000 | < 570 | 570 | U | 210 | < 260 | 260 | U | 95 | < 260 | 260 | U | 94 |
| Fluoranthene | ug/Kg | 100,000 | 100,000 | 100,000 | 3,700 | 530 | | 250 | 1,800 | 510 | | 240 | 1,200 | 540 | | 250 | 860 | 560 | U | 1300 | 930 | 570 | | 270 | 670 | 260 | | 120 | < 260 | 260 | U | 120 |
| Fluorene | ug/Kg | 100,000 | 100,000 | 30,000 | 1,200 | 530 | | 250 | 530 | 510 | | 240 | < 540 | 540 | U | 260 | < 560 | 560 | U | 1300 | < 570 | 570 | J | 270 | < 260 | 260 | U | 120 | < 260 | 260 | U | 120 |
| Hexachlorobenzene | ug/Kg | | | | < 310 | 310 | U | 220 | < 290 | 290 | U | 210 | < 310 | 310 | U | 230 | < 560 | 560 | U | 1200 | < 570 | 570 | U | 240 | < 260 | 260 | U | 110 | < 260 | 260 | U | 110 |
| Hexachlorobutadiene | ug/Kg | | | | < 530 | 530 | U | 280 | < 510 | 510 | U | 260 | < 540 | 540 | U | 280 | < 560 | 560 | U | 1400 | < 570 | 570 | U | 300 | < 260 | 260 | U | 130 | < 260 | 260 | U | 130 |
| Hexachlorocyclopentadiene | ug/Kg | | | | < 530 | 530 | U | 230 | < 510 | 510 | U | 220 | < 540 | 540 | U | 240 | < 560 | 560 | U | 1200 | < 570 | 570 | U | 250 | < 260 | 260 | U | 110 | < 260 | 260 | U | 110 |
| Hexachloroethane | ug/Kg | | | | < 310 | 310 | U | 230 | < 290 | 290 | U | 220 | < 310 | 310 | U | 230 | < 560 | 560 | U | 1200 | < 570 | 570 | U | 250 | < 260 | 260 | U | 110 | < 260 | 260 | U | 110 |
| Indeno(1,2,3-cd)pyrene | ug/Kg | 500 | 500 | 500 | 1,400 | 530 | | 250 | 660 | 510 | | 240 | < 500 | 500 | U | 260 | < 330 | 330 | U | 1300 | < 330 | 330 | U | 270 | < 260 | 260 | J | 120 | < 260 | 260 | U | 120 |
| Isophorone | ug/Kg | | | | < 310 | 310 | U | 210 | < 290 | 290 | U | 200 | < 310 | 310 | U | 220 | < 560 | 560 | U | 1100 | < 570 | 570 | U | 230 | < 260 | 260 | U | 100 | < 260 | 260 | U | 100 |
| Naphthalene | ug/Kg | 100,000 | 100,000 | 12,000 | 510 | 530 | J | 220 | 330 | 510 | J | 210 | < 540 | 540 | U | 220 | 2,600 | 560 | J | 1100 | 740 | 570 | | 240 | < 260 | 260 | U | 110 | < 260 | 260 | U | 100 |
| Nitrobenzene | ug/Kg | | | | < 310 | 310 | U | 270 | < 290 | 290 | U | 260 | < 310 | 310 | U | 270 | < 560 | 560 | U | 1400 | < 570 | 570 | U | 290 | < 260 | 260 | U | 130 | < 260 | 260 | U | 130 |
| N-Nitrosodimethylamine | ug/Kg | | | | < 530 | 530 | U | 220 | < 510 | 510 | U | 210 | < 540 | 540 | U | 220 | < 800 | 800 | U | 1100 | < 820 | 820 | U | 230 | < 370 | 370 | U | 100 | < 360 | 360 | U | 100 |
| N-Nitrosodi-n-propylamine | ug/Kg | | | | < 310 | 310 | U | 250 | < 290 | 290 | U | 240 | < 310 | 310 | U | 250 | < 560 | 560 | U | 1300 | < 570 | 570 | U | 270 | < 260 | 260 | U | 120 | < 260 | 260 | U | 120 |
| N-Nitrosodiphenylamine | ug/Kg | | | | < 310 | 310 | U | 290 | < 290 | 290 | U | 280 | < 310 | 310 | U | 300 | < 800 | 800 | U | 1500 | < 820 | 820 | U | 310 | < 370 | 370 | U | 140 | < 360 | 360 | U | 140 |
| Pentachlorophenol | ug/Kg | 2,400 | 6,700 | 800 | < 530 | 530 | U | 290 | < 510 | 510 | U | 280 | < 540 | 540 | U | 290 | < 800 | 800 | U | 1500 | < 800 | 800 | U | 310 | < 370 | 370 | U | 140 | < 360 | 360 | U | 140 |
| Phenanthrene | ug/Kg | 100,000 | 100,000 | 100,000 | 6,700 | 310 | | 220 | 3,000 | 290 | | 210 | 1,200 | 310 | | 220 | 1,500 | 560 | | 1100 | 1,400 | 570 | | 230 | 460 | 260 | | 110 | < 260 | 260 | U | 100 |
| Phenol | ug/Kg | 100,000 | 100,000 | 330 | < 530 | 530 | U | 240 | < 330 | 330 | U | 230 | < 330 | 330 | U | 250 | < 330 | 330 | U | 1300 | < 330 | 330 | U | 260 | < 260 | 260 | U | 120 | < 260 | 260 | U | 120 |
| Pyrene | ug/Kg | 100,000 | 100,000 | 100,000 | 2,900 | 530 | | 260 | 1,400 | 510 | | 250 | 900 | 540 | | 270 | 650 | 560 | U | 1400 | 750 | 570 | | 280 | 540 | 260 | | 130 | < 260 | 260 | U | 130 |
| **PCBs By SW8082A** | | | | | | | | | | | | | | | | | | | | | | | | | | | | | | | | |
| PCB-1016 | ug/Kg | 1,000 | | 100 | < 37 | 37 | U | 37 | < 36 | 36 | U | 36 | < 38 | 38 | U | 38 | < 80 | 80 | U | 80 | < 410 | 410 | U | 410 | < 74 | 74 | U | 74 | < 71 | 71 | U | 71 |
| PCB-1221 | ug/Kg | 1,000 | | 100 | < 37 | 37 | U | 37 | < 36 | 36 | U | 36 | < 38 | 38 | U | 38 | < 80 | 80 | U | 80 | < 410 | 410 | U | 410 | < 74 | 74 | U | 74 | < 71 | 71 | U | 71 |
| PCB-1232 | ug/Kg | 1,000 | | 100 | < 37 | 37 | U | 37 | < 36 | 36 | U | 36 | < 38 | 38 | U | 38 | < 80 | 80 | U | 80 | < 410 | 410 | U | 410 | < 74 | 74 | U | 74 | < 71 | 71 | U | 71 |
| PCB-1242 | ug/Kg | 1,000 | | 100 | < 37 | 37 | U | 37 | < 36 | 36 | U | 36 | < 38 | 38 | U | 38 | < 80 | 80 | U | 80 | < 410 | 410 | U | 410 | < 74 | 74 | U | 74 | < 71 | 71 | U | 71 |
| PCB-1248 | ug/Kg | 1,000 | | 100 | < 37 | 37 | U | 37 | < 36 | 36 | U | 36 | < 38 | 38 | U | 38 | < 80 | 80 | U | 80 | 1,300 | 410 | | 410 | < 74 | 74 | U | 74 | < 71 | 71 | U | 71 |
| PCB-1254 | ug/Kg | 1,000 | | 100 | < 37 | 37 | U | 37 | < 36 | 36 | U | 36 | < 38 | 38 | U | 38 | < 80 | 80 | U | 80 | < 410 | 410 | U | 410 | < 74 | 74 | U | 74 | < 71 | 71 | U | 71 |
| PCB-1260 | ug/Kg | 1,000 | | 100 | < 37 | 37 | U | 37 | < 36 | 36 | U | 36 | < 38 | 38 | U | 38 | < 80 | 80 | U | 80 | < 410 | 410 | U | 410 | < 74 | 74 | U | 74 | < 71 | 71 | U | 71 |
| PCB-1262 | ug/Kg | | | | < 37 | 37 | U | 37 | < 36 | 36 | U | 36 | < 38 | 38 | U | 38 | < 80 | 80 | U | 80 | < 410 | 410 | U | 410 | < 74 | 74 | U | 74 | < 71 | 71 | U | 71 |
| PCB-1268 | ug/Kg | | | | < 37 | 37 | U | 37 | < 36 | 36 | U | 36 | < 38 | 38 | U | 38 | < 80 | 80 | U | 80 | < 410 | 410 | U | 410 | < 74 | 74 | U | 74 | < 71 | 71 | U | 71 |
| **Metals, Total** | | | | | | | | | | | | | | | | | | | | | | | | | | | | | | | | |
| Aluminum | mg/Kg | | | | 14,500 | 38 | | 7.7 | 13,600 | 37 | | 7.3 | 10,600 | 38 | | 7.6 | 8,980 | 62 | | 8.2 | 6,790 | 59 | | 7.9 | 7,340 | 58 | | 7.7 | 5,740 | 50 | | 6.7 |
| Antimony | mg/Kg | | | | < 1.9 | 1.9 | U | 1.9 | < 1.8 | 1.8 | U | 1.8 | < 1.9 | 1.9 | U | 1.9 | < 4.1 | 4.1 | U | 2.1 | < 4.0 | 4.0 | U | 2.0 | < 3.9 | 3.9 | | 1.9 | < 3.4 | 3.4 | U | 1.7 |
| Arsenic | mg/Kg | 16 | 16 | 13 | 16.4 | 0.8 | | 0.77 | 6.8 | 0.7 | | 0.73 | 3.1 | 0.8 | | 0.76 | 3.5 | 0.8 | | 0.82 | 5.7 | 0.8 | | 0.79 | 4.7 | 0.8 | | 0.77 | 0.9 | 0.7 | | 0.67 |
| Barium | mg/Kg | 350 | 400 | 350 | 194 | 0.8 | N | 0.38 | 153 | 0.7 | N | 0.37 | 138 | 0.8 | N | 0.38 | 50.3 | 0.41 | | 0.41 | 71 | 0.40 | | 0.40 | 195 | 0.39 | | 0.39 | 17 | 0.34 | | 0.34 |
| Beryllium | mg/Kg | 14 | 72 | 7.2 | 0.37 | 0.31 | | 0.15 | 0.38 | 0.29 | | 0.15 | 0.27 | 0.31 | B | 0.15 | < 0.33 | 0.33 | U | 0.16 | < 0.32 | 0.32 | U | 0.16 | < 0.31 | 0.31 | U | 0.15 | < 0.27 | 0.27 | U | 0.13 |
| Cadmium | mg/Kg | 2.5 | 4.3 | 2.5 | 0.75 | 0.38 | | 0.15 | 0.7 | 0.37 | | 0.15 | 2.2 | 0.38 | | 0.15 | 0.96 | 0.41 | | 0.16 | 0.46 | 0.40 | | 0.16 | < 0.39 | 0.39 | U | 0.15 | < 0.34 | 0.34 | U | 0.13 |
| Calcium | mg/Kg | | | | 17,000 | 38 | | 35 | 11,200 | 37 | | 34 | 29,600 | 38 | | 35 | 58,000 | 62 | N | 38 | 75,000 | 59 | N | 36 | 108,000 | 58 | N | 35 | 168,000 | 5,000 | N | 3100 |
| Chromium | mg/Kg | | | 30 | 35 | 0.38 | | 0.38 | 41.2 | 0.37 | | 0.37 | 25.8 | 0.38 | | 0.38 | 16.5 | 0.41 | | 0.41 | 24.1 | 0.40 | | 0.40 | 12.9 | 0.39 | | 0.39 | 7.23 | 0.34 | | 0.34 |
| Cobalt | mg/Kg | | | | 12.5 | 0.38 | | 0.38 | 10.9 | 0.37 | | 0.37 | 8.74 | 0.38 | | 0.38 | 4.25 | 0.41 | | 0.41 | 6.74 | 0.40 | | 0.40 | 4.69 | 0.39 | | 0.39 | 2.68 | 0.34 | | 0.34 |
| Copper | mg/Kg | 270 | 270 | 50 | 123 | 0.38 | | 0.38 | 118 | 0.37 | | 0.37 | 72.1 | 0.38 | | 0.38 | 23.8 | 0.41 | | 0.41 | 61 | 0.40 | | 0.40 | 37.7 | 0.39 | | 0.39 | 4.26 | 0.34 | | 0.34 |
| Iron | mg/Kg | | | | 52,200 | 38 | * | 38 | 63,700 | 37 | * | 37 | 33,300 | 38 | * | 38 | 9,530 | 6.2 | | 4.1 | 16,100 | 59 | | 40 | 18,800 | 58 | | 39 | 5,030 | 5.0 | | 3.4 |
| Lead | mg/Kg | 400 | 400 | 63 | 309 | 7.7 | N* | 3.8 | 353 | 7.3 | N* | 3.7 | 271 | 7.6 | N* | 3.8 | 162 | 0.41 | | 0.41 | 188 | 4.0 | | 4.0 | 30.3 | 0.39 | | 0.39 | 5.13 | 0.34 | | 0.34 |
| Magnesium | mg/Kg | | | | 8,760 | 38 | | 38 | 5,930 | 37 | | 37 | 8,000 | 38 | | 38 | 20,600 | 62 | | 41 | 10,400 | 59 | | 40 | 66,500 | 580 | | 390 | 83,800 | 5,000 | | 3400 |
| Manganese | mg/Kg | 2,000 | 2,000 | 1,600 | 509 | 3.8 | N | 3.8 | 483 | 3.7 | N | 3.7 | 381 | 3.8 | N | 3.8 | 130 | 0.41 | N | 0.41 | 247 | 4.0 | N | 4.0 | 282 | 3.9 | | 3.9 | 136 | 3.4 | | 3.4 |
| Mercury | mg/Kg | 0.81 | 0.81 | 0.18 | 0.2 | 0.03 | N | 0.02 | 0.23 | 0.03 | N | 0.02 | 0.11 | 0.03 | N | 0.02 | 0.05 | 0.03 | | 0.02 | 0.56 | 0.03 | | 0.02 | < 0.03 | 0.03 | U | 0.02 | < 0.03 | 0.03 | U | 0.02 |
| Nickel | mg/Kg | 140 | 310 | 30 | 28.1 | 0.38 | | 0.38 | 27.1 | 0.37 | | 0.37 | 14.9 | 0.38 | | 0.38 | 11.4 | 0.41 | | 0.41 | 16.5 | 0.40 | | 0.40 | 10.7 | 0.39 | | 0.39 | 5.77 | 0.34 | | 0.34 |
| Potassium | mg/Kg | | | | 3,260 | 8 | N | 3.0 | 2,940 | 7 | N | 2.9 | 2,740 | 8 | N | 3.0 | 1,370 | 6.2 | N | 3.2 | 1,770 | 5.9 | N | 3.1 | 1,520 | 5.8 | N | 30 | 353 | 5.0 | N | 2.6 |
| Selenium | mg/Kg | 36 | 180 | 3.9 | < 1.5 | 1.5 | U | 1.3 | < 1.5 | 1.5 | U | 1.2 | < 1.5 | 1.5 | U | 1.3 | < 1.6 | 1.6 | U | 1.4 | < 1.6 | 1.6 | U | 1.3 | < 1.5 | 1.5 | U | 1.3 | < 1.3 | 1.3 | U | 1.1 |
| Silver | mg/Kg | 36 | 180 | 2 | 3.02 | 0.38 | | 0.38 | 0.84 | 0.37 | | 0.37 | 0.99 | 0.38 | | 0.38 | < 0.41 | 0.41 | U | 0.41 | < 0.40 | 0.40 | U | 0.40 | < 0.39 | 0.39 | U | 0.39 | < 0.34 | 0.34 | U | 0.34 |
| Sodium | mg/Kg | | | | 1,430 | 8 | N | 3.3 | 1,770 | 7 | N | 3.1 | 1,010 | 8 | N | 3.3 | 349 | 6.2 | | 3.5 | 257 | 5.9 | | 3.4 | 101 | 5.8 | N | 3.3 | 31.9 | 5.0 | N | 2.9 |
| Thallium | mg/Kg | | | | < 1.5 | 1.5 | U | 1.5 | < 1.5 | 1.5 | U | 1.5 | < 1.5 | 1.5 | U | 1.5 | < 3.7 | 3.7 | U | 1.6 | < 3.6 | 3.6 | U | 1.6 | < 3.5 | 3.5 | U | 1.5 | < 3.0 | 3.0 | U | 1.3 |
| Vanadium | mg/Kg | | | | 43.7 | 0.4 | | 0.38 | 46.6 | 0.4 | | 0.37 | 34.5 | 0.4 | | 0.38 | 27.1 | 0.41 | | 0.41 | 36.6 | 0.40 | | 0.40 | 17.6 | 0.39 | | 0.39 | 8.82 | 0.34 | | 0.34 |
| Zinc | mg/Kg | 2,200 | 10,000 | 109 | 298 | 7.7 | | 3.8 | 314 | 7.3 | | 3.7 | 299 | 7.6 | | 3.8 | 65.3 | 0.41 | | 0.41 | 146 | 0.40 | | 0.40 | 229 | 3.9 | | 3.9 | 158 | 3.4 | | 3.4 |

**TABLE 5C**
**SUBSURFACE SOIL LABORATORY ANALYTICAL RESULTS SUMMARY**

**REMEDIAL INVESTIGATION**
**109-125 MARBLEDALE ROAD**
**TUCKAHOE, NEW YORK**
**BCP # C360143**

| Analyte | Lab Sample Id / Collection Date / Client Id / Matrix | | | | BJ04211 4/16/2015 TB-6 4-8 FT Soil | | | | BJ04212 4/16/2015 TB-106 4-8 FT Soil | | | | BJ04213 4/16/2015 TB-6 26-28 FT Soil | | | | BH83000 3/11/2015 TB-7 (6-8) Solid | | | | BH83001 3/11/2015 TB-7 (10-12) Solid | | | | BH78388 2/27/2015 TB-8 2-4 Solid | | | | BH78389 2/27/2015 TB-8 20-22 Solid | | | |
|---|---|---|---|---|---|---|---|---|---|---|---|---|---|---|---|---|---|---|---|---|---|---|---|---|---|---|---|---|---|---|---|---|
| | Units | NY-Res. | NY-ResRestrict | NY-UnRestricted | Result | RL | Qual | MDL | Result | RL | Qual | MDL | Result | RL | Qual | MDL | Result | RL | Qual | MDL | Result | RL | Qual | MDL | Result | RL | Qual | MDL | Result | RL | Qual | MDL |
| Miscellaneous/Inorganics | | | | | | | | | | | | | | | | | | | | | | | | | | | | | | | | |
| Percent Solid | % | | | | 87 | | | | 90 | | | | 85 | | | | 82 | | | | 80 | | | | 90 | | | | 91 | | | |
| Total Cyanide | mg/Kg | | | | < 0.57 | 0.57 | UN | 0.29 | < 0.51 | 0.51 | UN | 0.25 | < 0.53 | 0.53 | UN | 0.27 | < 0.61 | 0.61 | U | 0.30 | 0.93 | 0.63 | | 0.31 | 1.66 | 0.56 | | 0.28 | 2.93 | 0.50 | | 0.25 |

Result Detected

RL Exceeds Criteria

Result Exceeds Criteria

| | |
|---|---|
| U | The compound was anlayzed for but not detected at or above the MDL. The number immediately preceding the "U" represents the PQL reporting level corrected for percent solids, weight and/or volume calculations, and dilution factors. |
| J | The value is estimated. This flag is used a) on form 1 when the compound is reported above the MDL, but below the PQL, and b) on the Tentatively Identified Compounds (TIC) form for all compounds identified. |
| N | The concentration is based on the response fo the nearest internal. This flag is used on the TIC form for all compounds identified. |
| S | This compound is a solvent that is used in the laboratory. Laboratory contamination is suspected if concentration is less than five times the reporting level. |
| D | The reported concentration is the result of a diluted analysis. |
| (*) | See report for comment. |

**TABLE 5D**
**SUBSURFACE SOIL LABORATORY ANALYTICAL RESULTS SUMMARY**

**REMEDIAL INVESTIGATION**
**109-125 MARBLEDALE ROAD**
**TUCKAHOE, NEW YORK**
**BCP # C360143**

| Analyte | Lab Sample Id / Collection Date / Client Id / Matrix | | | | BH79486 3/2/2015 TB-9 (2-4) Soil | | | | BH79487 3/2/2015 TB-9 (7-9) Soil | | | | BH79488 3/2/2015 TB-10 (4-6) Soil | | | | BH79489 3/2/2015 TB-10 (32-34) Soil | | | | BH78386 2/27/2015 TB-11 4-6 Solid | | | | BH78387 2/27/2015 TB-11 21-23 Solid | | | | BH78384 2/26/2015 TB-12 4-6 Solid | | | |
|---|---|---|---|---|---|---|---|---|---|---|---|---|---|---|---|---|---|---|---|---|---|---|---|---|---|---|---|---|---|---|---|---|
| | Units | NY-Res. | NY-ResRestrict | NY-UnRestricted | Result | RL | Qual | MDL | Result | RL | Qual | MDL | Result | RL | Qual | MDL | Result | RL | Qual | MDL | Result | RL | Qual | MDL | Result | RL | Qual | MDL | Result | RL | Qual | MDL |
| Volatiles (TCL) By SW8260C | | | | | | | | | | | | | | | | | | | | | | | | | | | | | | | | |
| 1,1,1-Trichloroethane | ug/kg | 100,000 | 100,000 | 680 | < 8.1 | 8.1 | U | 0.53 | < 8.1 | 8.1 | U | 0.52 | < 8.1 | 8.1 | U | 0.35 | < 8.1 | 8.1 | U | 84 | < 5.8 | 5.8 | U | 0.58 | < 6.1 | 6.1 | U | 0.61 | < 4.1 | 4.1 | U | 0.41 |
| 1,1,2,2-Tetrachloroethane | ug/kg | | | | < 8.1 | 8.1 | U | 1.1 | < 8.1 | 8.1 | U | 1.0 | < 8.1 | 8.1 | U | 0.70 | < 8.1 | 8.1 | U | 170 | < 5.8 | 5.8 | U | 1.2 | < 6.1 | 6.1 | U | 1.2 | < 4.1 | 4.1 | U | 0.82 |
| 1,1,2-Trichloroethane | ug/kg | | | | < 8.1 | 8.1 | U | 1.1 | < 8.1 | 8.1 | U | 1.0 | < 8.1 | 8.1 | U | 0.70 | < 8.1 | 8.1 | U | 170 | < 5.8 | 5.8 | U | 1.2 | < 6.1 | 6.1 | U | 1.2 | < 4.1 | 4.1 | U | 0.82 |
| 1,1-Dichloroethane | ug/kg | 19,000 | 26,000 | 270 | < 8.1 | 8.1 | U | 1.1 | < 8.1 | 8.1 | U | 1.0 | < 8.1 | 8.1 | U | 0.70 | < 8.1 | 8.1 | U | 170 | < 5.8 | 5.8 | U | 1.2 | < 6.1 | 6.1 | U | 1.2 | < 4.1 | 4.1 | U | 0.82 |
| 1,1-Dichloroethene | ug/kg | 100,000 | 100,000 | 330 | < 8.1 | 8.1 | U | 0.53 | < 8.1 | 8.1 | U | 0.52 | < 8.1 | 8.1 | U | 0.35 | < 8.1 | 8.1 | U | 84 | < 5.8 | 5.8 | U | 0.58 | < 6.1 | 6.1 | U | 0.61 | < 4.1 | 4.1 | U | 0.41 |
| 1,2,3-Trichlorobenzene | ug/kg | | | | < 360 | 360 | U | 1.1 | < 360 | 360 | U | 56 | < 360 | 360 | U | 0.70 | < 360 | 360 | U | 170 | < 5.8 | 5.8 | U | 1.2 | < 6.1 | 6.1 | U | 1.2 | < 4.1 | 4.1 | U | 0.82 |
| 1,2,4-Trichlorobenzene | ug/kg | | | | < 360 | 360 | U | 1.1 | < 360 | 360 | U | 56 | < 360 | 360 | U | 0.70 | < 360 | 360 | U | 170 | < 5.8 | 5.8 | U | 1.2 | < 6.1 | 6.1 | U | 1.2 | < 4.1 | 4.1 | U | 0.82 |
| 1,2-Dibromo-3-chloropropane | ug/kg | | | | < 360 | 360 | U | 1.1 | < 360 | 360 | U | 56 | < 360 | 360 | U | 0.70 | < 360 | 360 | U | 170 | < 5.8 | 5.8 | U | 1.2 | < 6.1 | 6.1 | U | 1.2 | < 4.1 | 4.1 | U | 0.82 |
| 1,2-Dibromoethane | ug/kg | | | | < 8.1 | 8.1 | U | 0.53 | < 8.1 | 8.1 | U | 0.52 | < 8.1 | 8.1 | U | 0.35 | < 8.1 | 8.1 | U | 84 | < 5.8 | 5.8 | U | 0.58 | < 6.1 | 6.1 | U | 0.61 | < 4.1 | 4.1 | U | 0.41 |
| 1,2-Dichlorobenzene | ug/kg | 100,000 | 100,000 | 1,100 | < 360 | 360 | U | 0.53 | < 360 | 360 | U | 28 | < 360 | 360 | U | 0.35 | < 360 | 360 | U | 84 | < 5.8 | 5.8 | U | 0.58 | < 6.1 | 6.1 | U | 0.61 | < 4.1 | 4.1 | U | 0.41 |
| 1,2-Dichloroethane | ug/kg | 2,300 | 3,100 | 20 | < 8.1 | 8.1 | U | 0.53 | < 8.1 | 8.1 | U | 0.52 | < 8.1 | 8.1 | U | 0.35 | < 8.1 | 8.1 | U | 84 | < 5.8 | 5.8 | U | 0.58 | < 6.1 | 6.1 | U | 0.61 | < 4.1 | 4.1 | U | 0.41 |
| 1,2-Dichloropropane | ug/kg | | | | < 8.1 | 8.1 | U | 1.1 | < 8.1 | 8.1 | U | 1.0 | < 8.1 | 8.1 | U | 0.70 | < 8.1 | 8.1 | U | 170 | < 5.8 | 5.8 | U | 1.2 | < 6.1 | 6.1 | U | 1.2 | < 4.1 | 4.1 | U | 0.82 |
| 1,3-Dichlorobenzene | ug/kg | 17,000 | 49,000 | 2,400 | < 360 | 360 | U | 0.53 | < 360 | 360 | U | 28 | < 360 | 360 | U | 0.35 | < 360 | 360 | U | 84 | < 5.8 | 5.8 | U | 0.58 | < 6.1 | 6.1 | U | 0.61 | < 4.1 | 4.1 | U | 0.41 |
| 1,4-Dichlorobenzene | ug/kg | 9,800 | 13,000 | 1,800 | < 360 | 360 | U | 0.53 | < 360 | 360 | U | 28 | < 360 | 360 | U | 0.35 | < 360 | 360 | U | 84 | < 5.8 | 5.8 | U | 0.58 | < 6.1 | 6.1 | U | 0.61 | < 4.1 | 4.1 | U | 0.41 |
| 2-Hexanone | ug/kg | | | | < 41 | 41 | U | 5.3 | < 41 | 41 | U | 5.2 | < 41 | 41 | U | 3.5 | < 41 | 41 | U | 840 | < 29 | 29 | U | 5.8 | < 30 | 30 | U | 6.1 | < 20 | 20 | U | 4.1 |
| 4-Methyl-2-pentanone | ug/kg | | | | < 41 | 41 | U | 5.3 | < 41 | 41 | U | 5.2 | < 41 | 41 | U | 3.5 | < 41 | 41 | U | 840 | < 29 | 29 | U | 5.8 | < 30 | 30 | U | 6.1 | < 20 | 20 | U | 4.1 |
| Acetone | ug/kg | 100,000 | 100,000 | 50 | < 50 | 50 | JS | 5.3 | 61 | 81 | S | 5.2 | < 50 | 50 | JS | 3.5 | < 50 | 50 | U | 840 | < 50 | 50 | JS | 5.8 | < 50 | 50 | JS | 6.1 | 72 | 41 | BS | 4.1 |
| Benzene | ug/kg | 2,900 | 4,800 | 60 | < 8.1 | 8.1 | J | 0.53 | 6.9 | 8.1 | | 0.52 | 5.9 | 8.1 | | 0.35 | 1,800 | 8.1 | | 84 | < 5.8 | 5.8 | J | 0.58 | < 6.1 | 6.1 | J | 0.61 | < 4.1 | 4.1 | J | 0.41 |
| Bromochloromethane | ug/kg | | | | < 8.1 | 8.1 | U | 0.53 | < 8.1 | 8.1 | U | 0.52 | < 8.1 | 8.1 | U | 0.35 | < 8.1 | 8.1 | U | 84 | < 5.8 | 5.8 | U | 0.58 | < 6.1 | 6.1 | U | 0.61 | < 4.1 | 4.1 | U | 0.41 |
| Bromodichloromethane | ug/kg | | | | < 8.1 | 8.1 | U | 1.1 | < 8.1 | 8.1 | U | 1.0 | < 8.1 | 8.1 | U | 0.70 | < 8.1 | 8.1 | U | 170 | < 5.8 | 5.8 | U | 1.2 | < 6.1 | 6.1 | U | 1.2 | < 4.1 | 4.1 | U | 0.82 |
| Bromoform | ug/kg | | | | < 8.1 | 8.1 | U | 1.1 | < 8.1 | 8.1 | U | 1.0 | < 8.1 | 8.1 | U | 0.70 | < 8.1 | 8.1 | U | 170 | < 5.8 | 5.8 | U | 1.2 | < 6.1 | 6.1 | U | 1.2 | < 4.1 | 4.1 | U | 0.82 |
| Bromomethane | ug/kg | | | | < 8.1 | 8.1 | U | 2.1 | < 8.1 | 8.1 | U | 2.1 | < 8.1 | 8.1 | U | 1.4 | < 8.1 | 8.1 | U | 340 | < 5.8 | 5.8 | U | 2.3 | < 6.1 | 6.1 | U | 2.4 | < 4.1 | 4.1 | U | 1.6 |
| Carbon Disulfide | ug/kg | | | | < 8.1 | 8.1 | U | 1.1 | < 8.1 | 8.1 | J | 1.0 | < 8.1 | 8.1 | J | 0.70 | < 8.1 | 8.1 | U | 170 | < 5.8 | 5.8 | U | 1.2 | < 6.1 | 6.1 | J | 1.2 | < 4.1 | 4.1 | U | 0.82 |
| Carbon tetrachloride | ug/kg | 1,400 | 2,400 | 760 | < 8.1 | 8.1 | U | 1.1 | < 8.1 | 8.1 | U | 1.0 | < 8.1 | 8.1 | U | 0.70 | < 8.1 | 8.1 | U | 170 | < 5.8 | 5.8 | U | 1.2 | < 6.1 | 6.1 | U | 1.2 | < 4.1 | 4.1 | U | 0.82 |
| Chlorobenzene | ug/kg | 100,000 | 100,000 | 1,100 | < 20 | 20 | U | 10 | < 20 | 20 | U | 5.2 | < 20 | 20 | U | 3.5 | < 1000 | 1,000 | U | 1000 | < 5.8 | 5.8 | U | 5.8 | < 6.1 | 6.1 | U | 6.1 | < 4.1 | 4.1 | U | 4.1 |
| Chloroethane | ug/kg | | | | < 8.1 | 8.1 | U | 0.53 | < 8.1 | 8.1 | U | 0.52 | < 8.1 | 8.1 | U | 0.35 | < 8.1 | 8.1 | U | 84 | < 5.8 | 5.8 | U | 0.58 | < 6.1 | 6.1 | U | 0.61 | < 4.1 | 4.1 | U | 0.41 |
| Chloroform | ug/kg | 10,000 | 49,000 | 370 | < 8.1 | 8.1 | U | 0.53 | < 8.1 | 8.1 | U | 0.52 | < 8.1 | 8.1 | U | 0.35 | < 8.1 | 8.1 | U | 84 | < 5.8 | 5.8 | U | 0.58 | < 6.1 | 6.1 | U | 0.61 | < 4.1 | 4.1 | U | 0.41 |
| Chloromethane | ug/kg | | | | < 8.1 | 8.1 | U | 1.1 | < 8.1 | 8.1 | U | 1.0 | < 8.1 | 8.1 | U | 0.70 | < 8.1 | 8.1 | U | 170 | < 5.8 | 5.8 | U | 1.2 | < 6.1 | 6.1 | U | 1.2 | < 4.1 | 4.1 | U | 0.82 |
| cis-1,2-Dichloroethene | ug/kg | 59,000 | 100,000 | 250 | < 8.1 | 8.1 | U | 0.53 | < 8.1 | 8.1 | U | 0.52 | < 8.1 | 8.1 | U | 0.35 | < 8.1 | 8.1 | U | 84 | < 5.8 | 5.8 | U | 0.58 | < 6.1 | 6.1 | U | 0.61 | < 4.1 | 4.1 | U | 0.41 |
| cis-1,3-Dichloropropene | ug/kg | | | | < 8.1 | 8.1 | U | 0.53 | < 8.1 | 8.1 | U | 0.52 | < 8.1 | 8.1 | U | 0.35 | < 8.1 | 8.1 | U | 84 | < 5.8 | 5.8 | U | 0.58 | < 6.1 | 6.1 | U | 0.61 | < 4.1 | 4.1 | U | 0.41 |
| Cyclohexane | ug/kg | | | | < 8.1 | 8.1 | U | 1.1 | < 8.1 | 8.1 | J | 1.0 | < 8.1 | 8.1 | J | 0.70 | < 8.1 | 8.1 | U | 170 | < 5.8 | 5.8 | U | 1.2 | < 6.1 | 6.1 | J | 1.2 | < 4.1 | 4.1 | U | 0.82 |
| Dibromochloromethane | ug/kg | | | | < 8.1 | 8.1 | U | 1.1 | < 8.1 | 8.1 | U | 1.0 | < 8.1 | 8.1 | U | 0.70 | < 8.1 | 8.1 | U | 170 | < 5.8 | 5.8 | U | 1.2 | < 6.1 | 6.1 | U | 1.2 | < 4.1 | 4.1 | U | 0.82 |
| Dichlorodifluoromethane | ug/kg | | | | < 8.1 | 8.1 | J | 0.53 | < 8.1 | 8.1 | J | 0.52 | < 8.1 | 8.1 | J | 0.35 | < 8.1 | 8.1 | U | 84 | < 5.8 | 5.8 | U | 0.58 | < 6.1 | 6.1 | J | 0.61 | < 4.1 | 4.1 | U | 0.41 |
| Ethylbenzene | ug/kg | 30,000 | 41,000 | 1,000 | < 8.1 | 8.1 | U | 0.53 | < 8.1 | 8.1 | J | 0.52 | < 8.1 | 8.1 | J | 0.35 | 1,200 | 8.1 | | 84 | < 5.8 | 5.8 | J | 0.58 | < 6.1 | 6.1 | U | 0.61 | < 4.1 | 4.1 | J | 0.41 |
| Isopropylbenzene | ug/kg | | | | < 360 | 360 | U | 0.53 | < 360 | 360 | U | 28 | < 360 | 360 | J | 0.35 | 6,900 | 360 | | 84 | < 5.8 | 5.8 | U | 0.58 | < 6.1 | 6.1 | U | 0.61 | < 4.1 | 4.1 | J | 0.41 |
| m&p-Xylene | ug/kg | | | | < 8.1 | 8.1 | U | 1.1 | < 8.1 | 8.1 | J | 1.0 | 8.4 | 8.1 | | 0.70 | 4,500 | 8.1 | | 170 | < 5.8 | 5.8 | U | 1.2 | < 6.1 | 6.1 | U | 1.2 | 11 | 4.1 | | 0.82 |
| Methyl ethyl ketone | ug/kg | 100,000 | 100,000 | 120 | < 49 | 49 | U | 5.3 | < 49 | 49 | J | 5.2 | < 49 | 49 | J | 3.5 | < 49 | 49 | U | 840 | < 35 | 35 | U | 5.8 | < 36 | 36 | U | 6.1 | < 25 | 25 | J | 4.1 |
| Methyl t-butyl ether (MTBE) | ug/kg | 62,000 | 100,000 | 930 | < 16 | 16 | U | 1.1 | < 16 | 16 | U | 1.0 | < 16 | 16 | U | 0.70 | < 16 | 16 | U | 170 | < 12 | 12 | U | 1.2 | < 12 | 12 | U | 1.2 | < 8.2 | 8.2 | U | 0.82 |
| Methylacetate | ug/kg | | | | < 6.5 | 6.5 | U | 2.6 | < 6.5 | 6.5 | U | 2.6 | < 6.5 | 6.5 | U | 1.8 | < 6.5 | 6.5 | U | 420 | < 4.6 | 4.6 | U | 2.9 | < 4.8 | 4.8 | U | 3.0 | < 3.3 | 3.3 | U | 2.0 |
| Methylcyclohexane | ug/kg | | | | < 8.1 | 8.1 | U | 1.1 | < 8.1 | 8.1 | J | 1.0 | 4.1 | 8.1 | | 0.70 | 9,200 | 8.1 | | 170 | < 5.8 | 5.8 | J | 1.2 | < 6.1 | 6.1 | J | 1.2 | < 4.1 | 4.1 | U | 0.82 |
| Methylene chloride | ug/kg | 51,000 | 100,000 | 50 | < 8.1 | 8.1 | U | 5.3 | < 8.1 | 8.1 | U | 5.2 | < 8.1 | 8.1 | U | 3.5 | < 8.1 | 8.1 | U | 840 | < 5.8 | 5.8 | U | 5.8 | < 6.1 | 6.1 | U | 6.1 | < 4.1 | 4.1 | U | 4.1 |
| o-Xylene | ug/kg | | | | < 8.1 | 8.1 | U | 1.1 | < 8.1 | 8.1 | J | 1.0 | 5.1 | 8.1 | | 0.70 | < 8.1 | 8.1 | J | 170 | < 5.8 | 5.8 | U | 1.2 | < 6.1 | 6.1 | U | 1.2 | 8.7 | 4.1 | | 0.82 |
| Styrene | ug/kg | | | | < 8.1 | 8.1 | U | 0.53 | < 8.1 | 8.1 | U | 0.52 | < 8.1 | 8.1 | U | 0.35 | < 8.1 | 8.1 | U | 84 | < 5.8 | 5.8 | U | 0.58 | < 6.1 | 6.1 | U | 0.61 | < 4.1 | 4.1 | J | 0.41 |
| Tetrachloroethene | ug/kg | 5,500 | 19,000 | 1,300 | < 8.1 | 8.1 | U | 1.1 | < 8.1 | 8.1 | U | 1.0 | < 8.1 | 8.1 | J | 0.70 | < 8.1 | 8.1 | U | 170 | < 5.8 | 5.8 | U | 1.2 | < 6.1 | 6.1 | U | 1.2 | < 4.1 | 4.1 | U | 0.82 |
| Toluene | ug/kg | 100,000 | 100,000 | 700 | < 8.1 | 8.1 | J | 0.53 | < 8.1 | 8.1 | J | 0.52 | 4.9 | 8.1 | | 0.35 | < 8.1 | 8.1 | J | 84 | < 5.8 | 5.8 | J | 0.58 | < 6.1 | 6.1 | U | 0.61 | < 4.1 | 4.1 | J | 0.41 |
| Total Xylenes | ug/kg | | 100,000 | 260 | < 8.1 | 8.1 | U | 1.1 | < 8.1 | 8.1 | | 1.0 | 13.5 | 8.1 | | 0.70 | 4,500 | 8.1 | | 170 | < 5.8 | 5.8 | U | 1.2 | < 6.1 | 6.1 | U | 1.2 | 19.7 | 4.1 | | 0.82 |
| trans-1,2-Dichloroethene | ug/kg | 100,000 | 100,000 | 190 | < 8.1 | 8.1 | U | 0.53 | < 8.1 | 8.1 | U | 0.52 | < 8.1 | 8.1 | U | 0.35 | < 8.1 | 8.1 | U | 84 | < 5.8 | 5.8 | U | 0.58 | < 6.1 | 6.1 | U | 0.61 | < 4.1 | 4.1 | U | 0.41 |
| trans-1,3-Dichloropropene | ug/kg | | | | < 8.1 | 8.1 | U | 0.53 | < 8.1 | 8.1 | U | 0.52 | < 8.1 | 8.1 | U | 0.35 | < 8.1 | 8.1 | U | 84 | < 5.8 | 5.8 | U | 0.58 | < 6.1 | 6.1 | U | 0.61 | < 4.1 | 4.1 | U | 0.41 |
| Trichloroethene | ug/kg | 10,000 | 21,000 | 470 | < 8.1 | 8.1 | U | 0.53 | < 8.1 | 8.1 | U | 0.52 | < 8.1 | 8.1 | J | 0.35 | < 8.1 | 8.1 | U | 84 | < 5.8 | 5.8 | U | 0.58 | < 6.1 | 6.1 | U | 0.61 | < 4.1 | 4.1 | U | 0.41 |
| Trichlorofluoromethane | ug/kg | | | | < 8.1 | 8.1 | U | 1.1 | < 8.1 | 8.1 | U | 1.0 | < 8.1 | 8.1 | U | 0.70 | < 8.1 | 8.1 | U | 170 | < 5.8 | 5.8 | U | 1.2 | < 6.1 | 6.1 | J | 1.2 | < 4.1 | 4.1 | U | 0.82 |
| Trichlorotrifluoroethane | ug/kg | | | | < 8.1 | 8.1 | U | 0.53 | < 8.1 | 8.1 | U | 0.52 | < 8.1 | 8.1 | U | 0.35 | < 8.1 | 8.1 | U | 84 | < 5.8 | 5.8 | U | 0.58 | < 6.1 | 6.1 | U | 0.61 | < 4.1 | 4.1 | U | 0.41 |
| Vinyl chloride | ug/kg | 210 | 900 | 20 | < 8.1 | 8.1 | U | 0.53 | < 8.1 | 8.1 | U | 0.52 | < 8.1 | 8.1 | U | 0.35 | < 8.1 | 8.1 | U | 84 | < 5.8 | 5.8 | U | 0.58 | < 6.1 | 6.1 | U | 0.61 | < 4.1 | 4.1 | U | 0.41 |

**TABLE 5D**
**SUBSURFACE SOIL LABORATORY ANALYTICAL RESULTS SUMMARY**

**REMEDIAL INVESTIGATION**
**109-125 MARBLEDALE ROAD**
**TUCKAHOE, NEW YORK**
**BCP # C360143**

| Analyte | Lab Sample Id / Collection Date / Client Id / Matrix | | | | BH79486 3/2/2015 TB-9 (2-4) Soil | | | | BH79487 3/2/2015 TB-9 (7-9) Soil | | | | BH79488 3/2/2015 TB-10 (4-6) Soil | | | | BH79489 3/2/2015 TB-10 (32-34) Soil | | | | BH78386 2/27/2015 TB-11 4-6 Solid | | | | BH78387 2/27/2015 TB-11 21-23 Solid | | | | BH78384 2/26/2015 TB-12 4-6 Solid | | | |
|---|---|---|---|---|---|---|---|---|---|---|---|---|---|---|---|---|---|---|---|---|---|---|---|---|---|---|---|---|---|---|---|---|
| | Units | NY-Res. | NY-ResRestrict | NY-UnRestricted | Result | RL | Qual | MDL | Result | RL | Qual | MDL | Result | RL | Qual | MDL | Result | RL | Qual | MDL | Result | RL | Qual | MDL | Result | RL | Qual | MDL | Result | RL | Qual | MDL |
| **1,4-dioxane By SW8260C** | | | | | | | | | | | | | | | | | | | | | | | | | | | | | | | | |
| 1,4-dioxane | ug/kg | 9,800 | 13,000 | 100 | < 100 | 100 | U | 100 | < 100 | 100 | U | 100 | < 70 | 70 | U | 70 | < 17000 | 17,000 | U | 6700 | < 100 | 100 | U | 100 | < 100 | 100 | U | 100 | < 82 | 82 | U | 82 |
| **Semivolatiles By SW8270D** | | | | | | | | | | | | | | | | | | | | | | | | | | | | | | | | |
| 1,1-Biphenyl | ug/Kg | | | | < 530 | 530 | U | 230 | < 530 | 530 | U | 230 | < 1300 | 1,300 | U | 580 | < 810 | 810 | U | 350 | < 2600 | 2,600 | U | 1100 | < 2700 | 2,700 | U | 1200 | < 560 | 560 | J | 250 |
| 1,2,4,5-Tetrachlorobenzene | ug/Kg | | | | < 530 | 530 | U | 270 | < 530 | 530 | U | 270 | < 1300 | 1,300 | U | 670 | < 810 | 810 | U | 410 | < 2600 | 2,600 | U | 1300 | < 2700 | 2,700 | U | 1400 | < 560 | 560 | U | 280 |
| 2,3,4,6-tetrachlorophenol | ug/Kg | | | | < 530 | 530 | U | 360 | < 530 | 530 | U | 350 | < 1300 | 1,300 | U | 890 | < 810 | 810 | U | 540 | < 2600 | 2,600 | U | 1700 | < 2700 | 2,700 | U | 1800 | < 560 | 560 | U | 370 |
| 2,4,5-Trichlorophenol | ug/Kg | | | | < 530 | 530 | U | 420 | < 530 | 530 | U | 420 | < 1300 | 1,300 | U | 1000 | < 810 | 810 | U | 630 | < 2600 | 2,600 | U | 2000 | < 2700 | 2,700 | U | 2100 | < 560 | 560 | U | 440 |
| 2,4,6-Trichlorophenol | ug/Kg | | | | < 530 | 530 | U | 240 | < 530 | 530 | U | 240 | < 1300 | 1,300 | U | 610 | < 810 | 810 | U | 370 | < 2600 | 2,600 | U | 1200 | < 2700 | 2,700 | U | 1200 | < 560 | 560 | U | 260 |
| 2,4-Dichlorophenol | ug/Kg | | | | < 530 | 530 | U | 270 | < 530 | 530 | U | 270 | < 1300 | 1,300 | U | 670 | < 810 | 810 | U | 410 | < 2600 | 2,600 | U | 1300 | < 2700 | 2,700 | U | 1400 | < 560 | 560 | U | 280 |
| 2,4-Dimethylphenol | ug/Kg | | | | < 530 | 530 | U | 190 | < 530 | 530 | U | 190 | < 1300 | 1,300 | U | 470 | < 810 | 810 | U | 290 | < 2600 | 2,600 | U | 920 | < 2700 | 2,700 | U | 960 | < 560 | 560 | U | 200 |
| 2,4-Dinitrophenol | ug/Kg | | | | < 1200 | 1,200 | U | 530 | < 1200 | 1,200 | U | 530 | < 3000 | 3,000 | U | 1300 | < 1800 | 1,800 | U | 810 | < 6000 | 6,000 | U | 2600 | < 6200 | 6,200 | U | 2700 | < 1300 | 1,300 | U | 560 |
| 2,4-Dinitrotoluene | ug/Kg | | | | < 530 | 530 | U | 300 | < 530 | 530 | U | 300 | < 1300 | 1,300 | U | 750 | < 810 | 810 | U | 450 | < 2600 | 2,600 | U | 1500 | < 2700 | 2,700 | U | 1500 | < 560 | 560 | U | 320 |
| 2,6-Dinitrotoluene | ug/Kg | | | | < 530 | 530 | U | 240 | < 530 | 530 | U | 240 | < 1300 | 1,300 | U | 600 | < 810 | 810 | U | 360 | < 2600 | 2,600 | U | 1200 | < 2700 | 2,700 | U | 1200 | < 560 | 560 | U | 250 |
| 2-Chloronaphthalene | ug/Kg | | | | < 530 | 530 | U | 220 | < 530 | 530 | U | 220 | < 1300 | 1,300 | U | 540 | < 810 | 810 | U | 330 | < 2600 | 2,600 | U | 1100 | < 2700 | 2,700 | U | 1100 | < 560 | 560 | U | 230 |
| 2-Chlorophenol | ug/Kg | | | | < 530 | 530 | U | 220 | < 530 | 530 | U | 220 | < 1300 | 1,300 | U | 540 | < 810 | 810 | U | 330 | < 2600 | 2,600 | U | 1100 | < 2700 | 2,700 | U | 1100 | < 560 | 560 | U | 230 |
| 2-Methylnaphthalene | ug/Kg | | | | < 530 | 530 | U | 230 | < 530 | 530 | U | 230 | < 1300 | 1,300 | J | 560 | 6,500 | 810 | | 340 | < 2600 | 2,600 | U | 1100 | < 2700 | 2,700 | U | 1200 | 1,300 | 560 | | 240 |
| 2-Methylphenol (o-cresol) | ug/Kg | 100,000 | 100,000 | 330 | < 330 | 330 | U | 360 | < 330 | 330 | U | 360 | < 1300 | 1,300 | U | 890 | < 330 | 330 | U | 540 | < 2600 | 2,600 | U | 1800 | < 2700 | 2,700 | U | 1800 | < 330 | 330 | U | 380 |
| 2-Nitroaniline | ug/Kg | | | | < 1200 | 1,200 | U | 770 | < 1200 | 1,200 | U | 770 | < 3000 | 3,000 | U | 1900 | < 1800 | 1,800 | U | 1200 | < 6000 | 6,000 | U | 3800 | < 6200 | 6,200 | U | 3900 | < 1300 | 1,300 | U | 810 |
| 2-Nitrophenol | ug/Kg | | | | < 530 | 530 | U | 480 | < 530 | 530 | U | 480 | < 1300 | 1,300 | U | 1200 | < 810 | 810 | U | 730 | < 2600 | 2,600 | U | 2400 | < 2700 | 2,700 | U | 2500 | < 560 | 560 | U | 510 |
| 3&4-Methylphenol (m&p-cresol) | ug/Kg | | | | < 760 | 760 | U | 300 | < 760 | 760 | U | 300 | < 1900 | 1,900 | U | 750 | < 1200 | 1,200 | U | 450 | < 3700 | 3,700 | U | 1500 | < 3900 | 3,900 | U | 1500 | < 800 | 800 | U | 320 |
| 3,3'-Dichlorobenzidine | ug/Kg | | | | < 920 | 920 | U | 310 | < 910 | 910 | U | 300 | < 2300 | 2,300 | U | 760 | < 1400 | 1,400 | U | 460 | < 4500 | 4,500 | U | 1500 | < 4700 | 4,700 | U | 1600 | < 960 | 960 | U | 320 |
| 3-Nitroaniline | ug/Kg | | | | < 1200 | 1,200 | U | 1700 | < 1200 | 1,200 | U | 1700 | < 3000 | 3,000 | U | 4100 | < 1800 | 1,800 | U | 2500 | < 6000 | 6,000 | U | 8100 | < 6200 | 6,200 | U | 8500 | < 1300 | 1,300 | U | 1700 |
| 4,6-Dinitro-2-methylphenol | ug/Kg | | | | < 2200 | 2,200 | U | 530 | < 2200 | 2,200 | U | 530 | < 5500 | 5,500 | U | 1300 | < 3300 | 3,300 | U | 810 | < 11000 | 11,000 | U | 2600 | < 11000 | 11,000 | U | 2700 | < 2300 | 2,300 | U | 560 |
| 4-Bromophenyl phenyl ether | ug/Kg | | | | < 760 | 760 | U | 220 | < 760 | 760 | U | 220 | < 1900 | 1,900 | U | 560 | < 1200 | 1,200 | U | 340 | < 3700 | 3,700 | U | 1100 | < 3900 | 3,900 | U | 1100 | < 800 | 800 | U | 240 |
| 4-Chloro-3-methylphenol | ug/Kg | | | | < 530 | 530 | U | 270 | < 530 | 530 | U | 270 | < 1300 | 1,300 | U | 670 | < 810 | 810 | U | 410 | < 2600 | 2,600 | U | 1300 | < 2700 | 2,700 | U | 1400 | < 560 | 560 | U | 280 |
| 4-Chloroaniline | ug/Kg | | | | < 530 | 530 | U | 360 | < 530 | 530 | U | 350 | < 1300 | 1,300 | U | 880 | < 810 | 810 | U | 540 | < 2600 | 2,600 | U | 1700 | < 2700 | 2,700 | U | 1800 | < 560 | 560 | U | 370 |
| 4-Chlorophenyl phenyl ether | ug/Kg | | | | < 530 | 530 | U | 260 | < 530 | 530 | U | 250 | < 1300 | 1,300 | U | 640 | < 810 | 810 | U | 390 | < 2600 | 2,600 | U | 1300 | < 2700 | 2,700 | U | 1300 | < 560 | 560 | U | 270 |
| 4-Nitroaniline | ug/Kg | | | | < 1200 | 1,200 | U | 250 | < 1200 | 1,200 | U | 250 | < 3000 | 3,000 | U | 630 | < 1800 | 1,800 | U | 380 | < 6000 | 6,000 | U | 1200 | < 6200 | 6,200 | U | 1300 | < 1300 | 1,300 | U | 270 |
| 4-Nitrophenol | ug/Kg | | | | < 2200 | 2,200 | U | 340 | < 2200 | 2,200 | U | 340 | < 5500 | 5,500 | U | 860 | < 3300 | 3,300 | U | 520 | < 11000 | 11,000 | U | 1700 | < 11000 | 11,000 | U | 1800 | < 2300 | 2,300 | U | 360 |
| Acenaphthene | ug/Kg | 100,000 | 100,000 | 20,000 | < 530 | 530 | U | 230 | < 530 | 530 | J | 230 | < 1300 | 1,300 | J | 580 | < 810 | 810 | U | 350 | < 2600 | 2,600 | U | 1100 | < 2700 | 2,700 | U | 1200 | < 560 | 560 | U | 240 |
| Acenaphthylene | ug/Kg | 100,000 | 100,000 | 100,000 | < 530 | 530 | U | 210 | < 530 | 530 | U | 210 | < 1300 | 1,300 | U | 530 | < 810 | 810 | U | 320 | < 2600 | 2,600 | U | 1000 | < 2700 | 2,700 | U | 1100 | < 560 | 560 | U | 220 |
| Acetophenone | ug/Kg | | | | < 530 | 530 | U | 240 | < 530 | 530 | U | 240 | < 1300 | 1,300 | U | 590 | < 810 | 810 | U | 360 | < 2600 | 2,600 | U | 1200 | < 2700 | 2,700 | U | 1200 | < 560 | 560 | U | 250 |
| Anthracene | ug/Kg | 100,000 | 100,000 | 100,000 | < 530 | 530 | J | 250 | 1,100 | 530 | | 250 | 2,900 | 1,300 | | 620 | < 810 | 810 | J | 380 | < 2600 | 2,600 | U | 1200 | < 2700 | 2,700 | J | 1300 | 640 | 560 | | 260 |
| Atrazine | ug/Kg | | | | < 530 | 530 | U | 310 | < 530 | 530 | U | 300 | < 1300 | 1,300 | U | 760 | < 810 | 810 | U | 460 | < 2600 | 2,600 | U | 1500 | < 2700 | 2,700 | U | 1600 | < 560 | 560 | U | 320 |
| Benz(a)anthracene | ug/Kg | 1,000 | 1,000 | 1,000 | 1,200 | 530 | | 260 | 2,200 | 530 | | 250 | 4,500 | 1,300 | | 640 | 1,500 | 810 | | 390 | 2,800 | 2,600 | | 1300 | 3,700 | 2,700 | | 1300 | 1,400 | 560 | | 270 |
| Benzaldehyde | ug/Kg | | | | < 530 | 530 | U | 230 | < 530 | 530 | U | 220 | < 1300 | 1,300 | U | 560 | < 810 | 810 | U | 340 | < 2600 | 2,600 | U | 1100 | < 2700 | 2,700 | U | 1200 | < 560 | 560 | U | 240 |
| Benzo(a)pyrene | ug/Kg | 1,000 | 1,000 | 1,000 | 1,200 | 530 | | 250 | 2,000 | 530 | | 250 | 4,000 | 1,300 | | 620 | 1,200 | 810 | | 380 | 3,400 | 2,600 | | 1200 | 3,000 | 2,700 | | 1300 | 2,100 | 560 | | 260 |
| Benzo(b)fluoranthene | ug/Kg | 1,000 | 1,000 | 1,000 | 1,500 | 530 | | 260 | 2,900 | 530 | | 260 | 5,900 | 1,300 | | 650 | 1,500 | 810 | | 390 | 4,000 | 2,600 | | 1300 | 3,900 | 2,700 | | 1300 | 2,300 | 560 | | 270 |
| Benzo(ghi)perylene | ug/Kg | 100,000 | 100,000 | 100,000 | < 530 | 530 | J | 250 | < 530 | 530 | J | 250 | < 1300 | 1,300 | J | 610 | < 810 | 810 | J | 370 | < 2600 | 2,600 | J | 1200 | < 2700 | 2,700 | J | 1300 | 1,300 | 560 | | 260 |
| Benzo(k)fluoranthene | ug/Kg | 1,000 | 3,900 | 800 | 600 | 530 | | 250 | 1,100 | 530 | | 250 | 2,300 | 1,300 | | 630 | < 800 | 800 | J | 380 | < 2600 | 2,600 | J | 1200 | < 2700 | 2,700 | U | 1300 | 840 | 560 | | 270 |
| Benzyl butyl phthalate | ug/Kg | | | | < 530 | 530 | U | 200 | < 530 | 530 | J | 200 | < 1300 | 1,300 | U | 490 | < 810 | 810 | U | 300 | < 2600 | 2,600 | U | 960 | < 2700 | 2,700 | U | 1000 | < 560 | 560 | U | 210 |
| Bis(2-chloroethoxy)methane | ug/Kg | | | | < 530 | 530 | U | 210 | < 530 | 530 | U | 210 | < 1300 | 1,300 | U | 520 | < 810 | 810 | U | 320 | < 2600 | 2,600 | U | 1000 | < 2700 | 2,700 | U | 1100 | < 560 | 560 | U | 220 |
| Bis(2-chloroethyl)ether | ug/Kg | | | | < 760 | 760 | U | 210 | < 760 | 760 | U | 200 | < 1900 | 1,900 | U | 510 | < 1200 | 1,200 | U | 310 | < 3700 | 3,700 | U | 1000 | < 3900 | 3,900 | U | 1100 | < 800 | 800 | U | 220 |
| Bis(2-chloroisopropyl)ether | ug/Kg | | | | < 530 | 530 | U | 210 | < 530 | 530 | U | 210 | < 1300 | 1,300 | U | 530 | < 810 | 810 | U | 320 | < 2600 | 2,600 | U | 1000 | < 2700 | 2,700 | U | 1100 | < 560 | 560 | U | 220 |
| Bis(2-ethylhexyl)phthalate | ug/Kg | | | | 770 | 530 | | 220 | < 530 | 530 | J | 220 | < 1300 | 1,300 | J | 550 | 4,000 | 810 | | 330 | < 2600 | 2,600 | U | 1100 | < 2700 | 2,700 | J | 1100 | 560 | 560 | | 230 |
| Caprolactam | ug/Kg | | | | < 530 | 530 | U | 530 | < 530 | 530 | U | 530 | < 1300 | 1,300 | U | 1300 | < 810 | 810 | U | 810 | < 2600 | 2,600 | U | 2600 | < 2700 | 2,700 | U | 2700 | < 560 | 560 | U | 560 |
| Carbazole | ug/Kg | | | | < 2200 | 2,200 | U | 580 | < 2200 | 2,200 | U | 570 | < 5500 | 5,500 | J | 1400 | < 3300 | 3,300 | U | 870 | < 11000 | 11,000 | U | 2800 | < 11000 | 11,000 | U | 2900 | < 2300 | 2,300 | U | 610 |
| Chrysene | ug/Kg | 1,000 | 3,900 | 1,000 | 1,200 | 530 | | 260 | 2,300 | 530 | | 250 | 4,800 | 1,300 | | 640 | 1,500 | 810 | | 390 | 2,900 | 2,600 | | 1300 | 3,300 | 2,700 | | 1300 | 1,500 | 560 | | 270 |
| Dibenz(a,h)anthracene | ug/Kg | 330 | 330 | 330 | < 330 | 330 | U | 250 | < 330 | 330 | U | 250 | < 1300 | 1,300 | U | 610 | < 330 | 330 | U | 370 | < 2600 | 2,600 | U | 1200 | < 2700 | 2,700 | U | 1300 | < 330 | 330 | J | 260 |
| Dibenzofuran | ug/Kg | | | 7,000 | < 530 | 530 | U | 220 | < 530 | 530 | J | 220 | 1,400 | 1,300 | | 550 | < 810 | 810 | U | 340 | < 2600 | 2,600 | U | 1100 | < 2700 | 2,700 | U | 1100 | < 560 | 560 | U | 230 |
| Diethyl phthalate | ug/Kg | | | | < 530 | 530 | U | 240 | < 530 | 530 | U | 240 | < 1300 | 1,300 | U | 600 | < 810 | 810 | U | 360 | < 2600 | 2,600 | U | 1200 | < 2700 | 2,700 | U | 1200 | < 560 | 560 | U | 250 |
| Dimethylphthalate | ug/Kg | | | | < 530 | 530 | U | 240 | < 530 | 530 | U | 240 | < 1300 | 1,300 | U | 590 | < 810 | 810 | U | 360 | < 2600 | 2,600 | U | 1200 | < 2700 | 2,700 | U | 1200 | < 560 | 560 | U | 250 |
| Di-n-butylphthalate | ug/Kg | | | | < 530 | 530 | U | 200 | < 530 | 530 | U | 200 | < 1300 | 1,300 | U | 500 | < 810 | 810 | U | 310 | < 2600 | 2,600 | U | 990 | < 2700 | 2,700 | U | 1000 | < 560 | 560 | U | 210 |

**TABLE 5D**
**SUBSURFACE SOIL LABORATORY ANALYTICAL RESULTS SUMMARY**

**REMEDIAL INVESTIGATION**
**109-125 MARBLEDALE ROAD**
**TUCKAHOE, NEW YORK**
**BCP # C360143**

| Analyte | Lab Sample Id / Collection Date / Client Id / Matrix | | | | BH79486 3/2/2015 TB-9 (2-4) Soil | | | | BH79487 3/2/2015 TB-9 (7-9) Soil | | | | BH79488 3/2/2015 TB-10 (4-6) Soil | | | | BH79489 3/2/2015 TB-10 (32-34) Soil | | | | BH78386 2/27/2015 TB-11 4-6 Solid | | | | BH78387 2/27/2015 TB-11 21-23 Solid | | | | BH78384 2/26/2015 TB-12 4-6 Solid | | | |
|---|---|---|---|---|---|---|---|---|---|---|---|---|---|---|---|---|---|---|---|---|---|---|---|---|---|---|---|---|---|---|---|---|
| | Units | NY-Res. | NY-ResRestrict | NY-UnRestricted | Result | RL | Qual | MDL | Result | RL | Qual | MDL | Result | RL | Qual | MDL | Result | RL | Qual | MDL | Result | RL | Qual | MDL | Result | RL | Qual | MDL | Result | RL | Qual | MDL |
| Di-n-octylphthalate | ug/Kg | | | | < 530 | 530 | U | 200 | < 530 | 530 | U | 200 | < 1300 | 1,300 | U | 490 | < 810 | 810 | U | 300 | < 2600 | 2,600 | U | 960 | < 2700 | 2,700 | U | 1000 | < 560 | 560 | U | 210 |
| Fluoranthene | ug/Kg | 100,000 | 100,000 | 100,000 | 1,900 | 530 | | 250 | 3,700 | 530 | | 250 | 8,600 | 1,300 | | 610 | 2,100 | 810 | | 370 | 6,700 | 2,600 | | 1200 | 9,100 | 2,700 | | 1300 | 2,500 | 560 | | 260 |
| Fluorene | ug/Kg | 100,000 | 100,000 | 30,000 | < 530 | 530 | U | 250 | < 530 | 530 | J | 250 | 1,800 | 1,300 | | 630 | < 810 | 810 | U | 380 | < 2600 | 2,600 | U | 1200 | < 2700 | 2,700 | U | 1300 | < 560 | 560 | U | 260 |
| Hexachlorobenzene | ug/Kg | | | | < 530 | 530 | U | 220 | < 530 | 530 | U | 220 | < 1300 | 1,300 | U | 550 | < 810 | 810 | U | 340 | < 2600 | 2,600 | U | 1100 | < 2700 | 2,700 | U | 1100 | < 560 | 560 | U | 230 |
| Hexachlorobutadiene | ug/Kg | | | | < 530 | 530 | U | 280 | < 530 | 530 | U | 270 | < 1300 | 1,300 | U | 690 | < 810 | 810 | U | 420 | < 2600 | 2,600 | U | 1300 | < 2700 | 2,700 | U | 1400 | < 560 | 560 | U | 290 |
| Hexachlorocyclopentadiene | ug/Kg | | | | < 530 | 530 | U | 230 | < 530 | 530 | U | 230 | < 1300 | 1,300 | U | 580 | < 810 | 810 | U | 350 | < 2600 | 2,600 | U | 1100 | < 2700 | 2,700 | U | 1200 | < 560 | 560 | U | 250 |
| Hexachloroethane | ug/Kg | | | | < 530 | 530 | U | 230 | < 530 | 530 | U | 230 | < 1300 | 1,300 | U | 570 | < 810 | 810 | U | 350 | < 2600 | 2,600 | U | 1100 | < 2700 | 2,700 | U | 1200 | < 560 | 560 | U | 240 |
| Indeno(1,2,3-cd)pyrene | ug/Kg | 500 | 500 | 500 | < 500 | 500 | J | 250 | < 500 | 500 | J | 250 | < 1300 | 1,300 | J | 630 | 660 | 500 | J | 380 | < 2600 | 2,600 | J | 1200 | < 2700 | 2,700 | U | 1300 | 1,200 | 560 | | 270 |
| Isophorone | ug/Kg | | | | < 530 | 530 | U | 210 | < 530 | 530 | U | 210 | < 1300 | 1,300 | U | 530 | < 810 | 810 | U | 320 | < 2600 | 2,600 | U | 1000 | < 2700 | 2,700 | U | 1100 | < 560 | 560 | U | 220 |
| Naphthalene | ug/Kg | 100,000 | 100,000 | 12,000 | < 530 | 530 | U | 220 | < 530 | 530 | J | 220 | 2,100 | 1,300 | | 550 | 7,400 | 810 | | 330 | < 2600 | 2,600 | U | 1100 | < 2700 | 2,700 | U | 1100 | < 560 | 560 | U | 230 |
| Nitrobenzene | ug/Kg | | | | < 530 | 530 | U | 270 | < 530 | 530 | U | 270 | < 1300 | 1,300 | U | 660 | < 810 | 810 | U | 400 | < 2600 | 2,600 | U | 1300 | < 2700 | 2,700 | U | 1400 | < 560 | 560 | U | 280 |
| N-Nitrosodimethylamine | ug/Kg | | | | < 760 | 760 | U | 220 | < 760 | 760 | U | 210 | < 1900 | 1,900 | U | 530 | < 1200 | 1,200 | U | 330 | < 3700 | 3,700 | U | 1100 | < 3900 | 3,900 | U | 1100 | < 800 | 800 | U | 230 |
| N-Nitrosodi-n-propylamine | ug/Kg | | | | < 530 | 530 | U | 250 | < 530 | 530 | U | 250 | < 1300 | 1,300 | U | 610 | < 810 | 810 | U | 370 | < 2600 | 2,600 | U | 1200 | < 2700 | 2,700 | U | 1300 | < 560 | 560 | U | 260 |
| N-Nitrosodiphenylamine | ug/Kg | | | | < 760 | 760 | U | 290 | < 760 | 760 | U | 290 | < 1900 | 1,900 | U | 730 | < 1200 | 1,200 | U | 440 | < 3700 | 3,700 | U | 1400 | < 3900 | 3,900 | U | 1500 | < 800 | 800 | U | 310 |
| Pentachlorophenol | ug/Kg | 2,400 | 6,700 | 800 | < 760 | 760 | U | 290 | < 760 | 760 | U | 290 | < 800 | 800 | U | 720 | < 800 | 800 | U | 440 | < 3700 | 3,700 | U | 1400 | < 3900 | 3,900 | U | 1500 | < 800 | 800 | U | 300 |
| Phenanthrene | ug/Kg | 100,000 | 100,000 | 100,000 | 1,700 | 530 | | 220 | 3,600 | 530 | | 220 | 10,000 | 1,300 | | 540 | 2,100 | 810 | | 330 | 3,600 | 2,600 | | 1100 | 6,500 | 2,700 | | 1100 | 1,900 | 560 | | 230 |
| Phenol | ug/Kg | 100,000 | 100,000 | 330 | < 330 | 330 | U | 240 | < 330 | 330 | U | 240 | < 1300 | 1,300 | U | 610 | < 330 | 330 | U | 370 | < 2600 | 2,600 | U | 1200 | < 2700 | 2,700 | U | 1200 | < 330 | 330 | U | 260 |
| Pyrene | ug/Kg | 100,000 | 100,000 | 100,000 | 1,600 | 530 | | 260 | 3,000 | 530 | | 260 | 6,500 | 1,300 | | 650 | 1,700 | 810 | | 400 | 5,400 | 2,600 | | 1300 | 7,400 | 2,700 | | 1300 | 3,500 | 560 | | 280 |
| **PCBs By SW8082A** | | | | | | | | | | | | | | | | | | | | | | | | | | | | | | | | |
| PCB-1016 | ug/Kg | 1,000 | | 100 | < 74 | 74 | U | 74 | < 77 | 77 | U | 77 | < 76 | 76 | U | 76 | < 120 | 120 | U | 100 | < 74 | 74 | U | 74 | < 77 | 77 | U | 77 | < 79 | 79 | U | 79 |
| PCB-1221 | ug/Kg | 1,000 | | 100 | < 74 | 74 | U | 74 | < 77 | 77 | U | 77 | < 76 | 76 | U | 76 | < 120 | 120 | U | 100 | < 74 | 74 | U | 74 | < 77 | 77 | U | 77 | < 79 | 79 | U | 79 |
| PCB-1232 | ug/Kg | 1,000 | | 100 | < 74 | 74 | U | 74 | < 77 | 77 | U | 77 | < 76 | 76 | U | 76 | < 120 | 120 | U | 100 | < 74 | 74 | U | 74 | < 77 | 77 | U | 77 | < 79 | 79 | U | 79 |
| PCB-1242 | ug/Kg | 1,000 | | 100 | < 74 | 74 | U | 74 | < 77 | 77 | U | 77 | < 76 | 76 | U | 76 | < 120 | 120 | U | 100 | < 74 | 74 | U | 74 | < 77 | 77 | U | 77 | < 79 | 79 | U | 79 |
| PCB-1248 | ug/Kg | 1,000 | | 100 | < 74 | 74 | U | 74 | < 77 | 77 | U | 77 | < 76 | 76 | U | 76 | < 120 | 120 | U | 100 | < 74 | 74 | U | 74 | < 77 | 77 | U | 77 | < 79 | 79 | U | 79 |
| PCB-1254 | ug/Kg | 1,000 | | 100 | < 74 | 74 | U | 74 | < 77 | 77 | U | 77 | < 76 | 76 | U | 76 | < 120 | 120 | U | 100 | < 74 | 74 | U | 74 | < 77 | 77 | U | 77 | < 79 | 79 | U | 79 |
| PCB-1260 | ug/Kg | 1,000 | | 100 | < 74 | 74 | U | 74 | < 77 | 77 | U | 77 | 190 | 76 | | 76 | 130 | 120 | | 100 | < 74 | 74 | U | 74 | < 77 | 77 | U | 77 | < 79 | 79 | U | 79 |
| PCB-1262 | ug/Kg | | | | < 74 | 74 | U | 74 | < 77 | 77 | U | 77 | < 76 | 76 | U | 76 | < 120 | 120 | U | 100 | < 74 | 74 | U | 74 | < 77 | 77 | U | 77 | < 79 | 79 | U | 79 |
| PCB-1268 | ug/Kg | | | | < 74 | 74 | U | 74 | < 77 | 77 | U | 77 | < 76 | 76 | U | 76 | < 120 | 120 | U | 100 | < 74 | 74 | U | 74 | < 77 | 77 | U | 77 | < 79 | 79 | U | 79 |
| **Metals, Total** | | | | | | | | | | | | | | | | | | | | | | | | | | | | | | | | |
| Aluminum | mg/Kg | | | | 10,600 | 54 | | 7.2 | 8,160 | 60 | | 8.0 | 11,200 | 53 | | 7.1 | 10,300 | 88 | | 12 | 8,040 | 58 | | 7.8 | 3,670 | 54 | | 7.3 | 11,400 | 56 | | 7.5 |
| Antimony | mg/Kg | | | | < 3.6 | 3.6 | U | 1.8 | < 4.0 | 4.0 | U | 2.0 | < 3.5 | 3.5 | U | 1.8 | < 7.0 | 7.0 | | 2.9 | < 3.9 | 3.9 | U | 1.9 | < 3.6 | 3.6 | U | 1.8 | < 3.8 | 3.8 | | 1.9 |
| Arsenic | mg/Kg | 16 | 16 | 13 | 3.3 | 0.7 | | 0.72 | 4 | 0.8 | | 0.80 | 3.3 | 0.7 | | 0.71 | 17.1 | 1.2 | | 1.2 | 2.8 | 0.8 | | 0.78 | 3.2 | 0.7 | | 0.73 | 2.7 | 0.8 | | 0.75 |
| Barium | mg/Kg | 350 | 400 | 350 | 79.1 | 0.36 | | 0.36 | 57.9 | 0.40 | | 0.40 | 73.8 | 0.35 | | 0.35 | 332 | 0.58 | | 0.58 | 57.6 | 0.39 | | 0.39 | 29.3 | 0.36 | | 0.36 | 92.2 | 0.38 | | 0.38 |
| Beryllium | mg/Kg | 14 | 72 | 7.2 | 0.34 | 0.29 | | 0.14 | < 0.32 | 0.32 | U | 0.16 | 0.32 | 0.28 | | 0.14 | < 0.47 | 0.47 | U | 0.23 | < 0.31 | 0.31 | U | 0.16 | < 0.29 | 0.29 | U | 0.15 | 0.38 | 0.30 | | 0.15 |
| Cadmium | mg/Kg | 2.5 | 4.3 | 2.5 | < 0.36 | 0.36 | U | 0.14 | < 0.40 | 0.40 | U | 0.16 | < 0.35 | 0.35 | U | 0.14 | 3.25 | 0.58 | | 0.23 | < 0.39 | 0.39 | U | 0.16 | < 0.36 | 0.36 | U | 0.15 | < 0.38 | 0.38 | U | 0.15 |
| Calcium | mg/Kg | | | | 15,600 | 54 | | 33 | 62,400 | 60 | | 37 | 24,800 | 53 | | 33 | 86,900 | 88 | | 54 | 37,000 | 58 | N | 36 | 86,900 | 54 | N | 33 | 23,900 | 56 | N | 35 |
| Chromium | mg/Kg | | | 30 | 25.2 | 0.36 | | 0.36 | 26 | 0.40 | | 0.40 | 24.8 | 0.35 | | 0.35 | 84.7 | 0.58 | | 0.58 | 17 | 0.39 | | 0.39 | 16.6 | 0.36 | | 0.36 | 25.9 | 0.38 | | 0.38 |
| Cobalt | mg/Kg | | | | 9.57 | 0.36 | | 0.36 | 7.28 | 0.40 | | 0.40 | 11.4 | 0.35 | | 0.35 | 12.3 | 0.58 | | 0.58 | 8.8 | 0.39 | | 0.39 | 4.61 | 0.36 | | 0.36 | 10.2 | 0.38 | | 0.38 |
| Copper | mg/kg | 270 | 270 | 50 | 60.7 | 0.36 | | 0.36 | 28 | 0.40 | | 0.40 | 57.7 | 0.35 | | 0.35 | 90.9 | 0.58 | | 0.58 | 72 | 0.39 | | 0.39 | 17.7 | 0.36 | | 0.36 | 28 | 0.38 | | 0.38 |
| Iron | mg/Kg | | | | 20,100 | 54 | | 36 | 13,600 | 60 | | 40 | 20,700 | 53 | | 35 | 30,900 | 88 | | 58 | 18,300 | 58 | | 39 | 8,550 | 5.4 | | 3.6 | 18,600 | 56 | | 38 |
| Lead | mg/Kg | 400 | 400 | 63 | 52.5 | 0.36 | | 0.36 | 40.6 | 0.40 | | 0.40 | 49.3 | 0.35 | | 0.35 | 570 | 5.8 | | 5.8 | 28 | 0.39 | | 0.39 | 37.5 | 0.36 | | 0.36 | 37.4 | 0.38 | | 0.38 |
| Magnesium | mg/Kg | | | | 6,620 | 54 | | 36 | 30,000 | 60 | | 40 | 14,500 | 53 | | 35 | 50,100 | 88 | | 58 | 15,000 | 58 | | 39 | 48,600 | 54 | | 36 | 8,150 | 56 | | 38 |
| Manganese | mg/Kg | 2,000 | 2,000 | 1,600 | 279 | 3.6 | | 3.6 | 208 | 4.0 | | 4.0 | 349 | 3.5 | | 3.5 | 324 | 5.8 | | 5.8 | 201 | 3.9 | | 3.9 | 165 | 3.6 | | 3.6 | 297 | 3.8 | | 3.8 |
| Mercury | mg/Kg | 0.81 | 0.81 | 0.18 | 0.04 | 0.03 | | 0.02 | 0.05 | 0.03 | | 0.02 | 0.28 | 0.03 | | 0.02 | 0.57 | 0.05 | | 0.03 | 0.03 | 0.03 | | 0.02 | < 0.03 | 0.03 | U | 0.02 | 0.1 | 0.03 | | 0.02 |
| Nickel | mg/Kg | 140 | 310 | 30 | 20.3 | 0.36 | | 0.36 | 16.3 | 0.40 | | 0.40 | 19 | 0.35 | | 0.35 | 35 | 0.58 | | 0.58 | 13.8 | 0.39 | | 0.39 | 11.4 | 0.36 | | 0.36 | 21.3 | 0.38 | | 0.38 |
| Potassium | mg/Kg | | | | 2,340 | 5.4 | N | 2.8 | 1,860 | 6.0 | N | 3.1 | 3,160 | 5.3 | N | 2.8 | 2,440 | 8.8 | N | 4.6 | 1,940 | 5.8 | N | 3.0 | 1,610 | 5.4 | N | 28 | 3,630 | 56 | N | 29 |
| Selenium | mg/Kg | 36 | 180 | 3.9 | < 1.4 | 1.4 | U | 1.2 | < 1.6 | 1.6 | U | 1.4 | < 1.4 | 1.4 | U | 1.2 | < 2.3 | 2.3 | U | 2.0 | < 1.6 | 1.6 | U | 1.3 | < 1.5 | 1.5 | U | 1.2 | < 1.5 | 1.5 | U | 1.3 |
| Silver | mg/Kg | 36 | 180 | 2 | < 0.36 | 0.36 | U | 0.36 | < 0.40 | 0.40 | U | 0.40 | < 0.35 | 0.35 | U | 0.35 | 5.1 | 0.58 | | 0.58 | < 0.39 | 0.39 | U | 0.39 | < 0.36 | 0.36 | U | 0.36 | < 0.38 | 0.38 | U | 0.38 |
| Sodium | mg/Kg | | | | 289 | 5.4 | N | 3.1 | 321 | 6.0 | N | 3.4 | 293 | 5.3 | N | 3.1 | 202 | 8.8 | N | 5.0 | 414 | 5.8 | N | 3.3 | 261 | 5.4 | N | 3.1 | 209 | 5.6 | N | 3.2 |
| Thallium | mg/Kg | | | | < 3.2 | 3.2 | U | 1.4 | < 3.6 | 3.6 | U | 1.6 | < 3.2 | 3.2 | U | 1.4 | < 5.3 | 5.3 | U | 2.3 | < 3.5 | 3.5 | U | 1.6 | < 3.3 | 3.3 | U | 1.5 | < 3.4 | 3.4 | U | 1.5 |
| Vanadium | mg/Kg | | | | 42 | 0.36 | | 0.36 | 36.5 | 0.40 | | 0.40 | 37.5 | 0.35 | | 0.35 | 52.7 | 0.58 | | 0.58 | 40.4 | 0.39 | | 0.39 | 33.8 | 0.36 | | 0.36 | 34.1 | 0.38 | | 0.38 |
| Zinc | mg/Kg | 2,200 | 10,000 | 109 | 71 | 0.36 | | 0.36 | 48.1 | 0.40 | | 0.40 | 70.8 | 0.35 | | 0.35 | 677 | 5.8 | | 5.8 | 49.1 | 0.39 | | 0.39 | 36.9 | 0.36 | | 0.36 | 64.5 | 0.38 | | 0.38 |

**TABLE 5D**
**SUBSURFACE SOIL LABORATORY ANALYTICAL RESULTS SUMMARY**

**REMEDIAL INVESTIGATION**
**109-125 MARBLEDALE ROAD**
**TUCKAHOE, NEW YORK**
**BCP # C360143**

| Analyte | Lab Sample Id / Collection Date / Client Id / Matrix | | | | BH79486 3/2/2015 TB-9 (2-4) Soil | | | | BH79487 3/2/2015 TB-9 (7-9) Soil | | | | BH79488 3/2/2015 TB-10 (4-6) Soil | | | | BH79489 3/2/2015 TB-10 (32-34) Soil | | | | BH78386 2/27/2015 TB-11 4-6 Solid | | | | BH78387 2/27/2015 TB-11 21-23 Solid | | | | BH78384 2/26/2015 TB-12 4-6 Solid | | | |
|---|---|---|---|---|---|---|---|---|---|---|---|---|---|---|---|---|---|---|---|---|---|---|---|---|---|---|---|---|---|---|---|---|
| | Units | NY-Res. | NY-ResRestrict | NY-UnRestricted | Result | RL | Qual | MDL | Result | RL | Qual | MDL | Result | RL | Qual | MDL | Result | RL | Qual | MDL | Result | RL | Qual | MDL | Result | RL | Qual | MDL | Result | RL | Qual | MDL |
| **Miscellaneous/Inorganics** | | | | | | | | | | | | | | | | | | | | | | | | | | | | | | | | |
| Percent Solid | % | | | | 87 | | | | 86 | | | | 87 | | | | 57 | | | | 88 | | | | 85 | | | | 82 | | | |
| Total Cyanide | mg/Kg | | | | < 0.48 | 0.48 | U | 0.24 | < 0.58 | 0.58 | U | 0.29 | < 0.57 | 0.57 | U | 0.29 | 9.82 | 0.88 | | 0.44 | < 0.57 | 0.57 | U | 0.28 | < 0.59 | 0.59 | U | 0.29 | < 0.61 | 0.61 | U | 0.30 |

Result Detected

RL Exceeds Criteria

Result Exceeds Criteria

U — The compound was anlayzed for but not detected at or above the MDL. The number immediately preceding the "U" represents the PQL reporting level corrected for percent solids, weight and/or volume calculations, and dilution factors.

J — The value is estimated. This flag is used
a) on form 1 when the compound is reported above the MDL, but below the PQL, and
b) on the Tentatively Identified Compounds (TIC) form for all compounds identified.

N — The concentration is based on the response fo the nearest internal. This flag is used on the TIC form for all compounds identified.

S — This compound is a solvent that is used in the laboratory. Laboratory contamination is suspected if concentration is less than five times the reporting level.

D — The reported concentration is the result of a diluted analysis.

(*) — See report for comment.

# TABLE 5E
## SUBSURFACE SOIL LABORATORY ANALYTICAL RESULTS SUMMARY

## REMEDIAL INVESTIGATION
## 109-125 MARBLEDALE ROAD
## TUCKAHOE, NEW YORK
## BCP # C360143

| Analyte | Lab Sample Id<br>Collection Date<br>Client Id<br>Matrix | Part 375 Soil Cleanup Objectives | | | BH78385<br>2/26/2015<br>TB-12 28-30<br>Solid | | | | BH78390<br>2/26/2015<br>TB-13 4-6<br>Solid | | | | BH78391<br>2/26/2015<br>TB-13 26-28<br>Solid | | | |
|---|---|---|---|---|---|---|---|---|---|---|---|---|---|---|---|---|
| | Units | NY-Res. | NY-ResRestrict | NY-UnRestricted | Result | RL | Qual | MDL | Result | RL | Qual | MDL | Result | RL | Qual | MDL |
| Volatiles (TCL) By SW8260C | | | | | | | | | | | | | | | | |
| 1,1,1-Trichloroethane | ug/kg | 100,000 | 100,000 | 680 | < 5.1 | 5.1 | U | 0.51 | < 6.0 | 6.0 | U | 0.60 | < 5.3 | 5.3 | U | 0.53 |
| 1,1,2,2-Tetrachloroethane | ug/kg | | | | < 5.1 | 5.1 | U | 1.0 | < 6.0 | 6.0 | U | 1.2 | < 5.3 | 5.3 | U | 1.1 |
| 1,1,2-Trichloroethane | ug/kg | | | | < 5.1 | 5.1 | U | 1.0 | < 6.0 | 6.0 | U | 1.2 | < 5.3 | 5.3 | U | 1.1 |
| 1,1-Dichloroethane | ug/kg | 19,000 | 26,000 | 270 | < 5.1 | 5.1 | U | 1.0 | < 6.0 | 6.0 | U | 1.2 | < 5.3 | 5.3 | U | 1.1 |
| 1,1-Dichloroethene | ug/kg | 100,000 | 100,000 | 330 | < 5.1 | 5.1 | U | 0.51 | < 6.0 | 6.0 | U | 0.60 | < 5.3 | 5.3 | U | 0.53 |
| 1,2,3-Trichlorobenzene | ug/kg | | | | < 5.1 | 5.1 | U | 1.0 | < 6.0 | 6.0 | U | 1.2 | < 5.3 | 5.3 | U | 1.1 |
| 1,2,4-Trichlorobenzene | ug/kg | | | | < 5.1 | 5.1 | U | 1.0 | < 6.0 | 6.0 | U | 1.2 | < 5.3 | 5.3 | U | 1.1 |
| 1,2-Dibromo-3-chloropropane | ug/kg | | | | < 5.1 | 5.1 | U | 1.0 | < 6.0 | 6.0 | U | 1.2 | < 5.3 | 5.3 | U | 1.1 |
| 1,2-Dibromoethane | ug/kg | | | | < 5.1 | 5.1 | U | 0.51 | < 6.0 | 6.0 | U | 0.60 | < 5.3 | 5.3 | U | 0.53 |
| 1,2-Dichlorobenzene | ug/kg | 100,000 | 100,000 | 1,100 | < 5.1 | 5.1 | U | 0.51 | < 6.0 | 6.0 | U | 0.60 | < 5.3 | 5.3 | U | 0.53 |
| 1,2-Dichloroethane | ug/kg | 2,300 | 3,100 | 20 | < 5.1 | 5.1 | U | 0.51 | < 6.0 | 6.0 | U | 0.60 | < 5.3 | 5.3 | U | 0.53 |
| 1,2-Dichloropropane | ug/kg | | | | < 5.1 | 5.1 | U | 1.0 | < 6.0 | 6.0 | U | 1.2 | < 5.3 | 5.3 | U | 1.1 |
| 1,3-Dichlorobenzene | ug/kg | 17,000 | 49,000 | 2,400 | < 5.1 | 5.1 | U | 0.51 | < 6.0 | 6.0 | U | 0.60 | < 5.3 | 5.3 | U | 0.53 |
| 1,4-Dichlorobenzene | ug/kg | 9,800 | 13,000 | 1,800 | < 5.1 | 5.1 | U | 0.51 | < 6.0 | 6.0 | U | 0.60 | < 5.3 | 5.3 | U | 0.53 |
| 2-Hexanone | ug/kg | | | | < 25 | 25 | U | 5.1 | < 30 | 30 | U | 6.0 | < 27 | 27 | U | 5.3 |
| 4-Methyl-2-pentanone | ug/kg | | | | < 25 | 25 | U | 5.1 | < 30 | 30 | U | 6.0 | < 27 | 27 | U | 5.3 |
| Acetone | ug/kg | 100,000 | 100,000 | 50 | 62 | 51 | S | 5.1 | < 50 | 50 | JBS | 6.0 | 200 | 53 | BS | 5.3 |
| Benzene | ug/kg | 2,900 | 4,800 | 60 | < 5.1 | 5.1 | J | 0.51 | < 6.0 | 6.0 | U | 0.60 | < 5.3 | 5.3 | J | 0.53 |
| Bromochloromethane | ug/kg | | | | < 5.1 | 5.1 | U | 0.51 | < 6.0 | 6.0 | U | 0.60 | < 5.3 | 5.3 | U | 0.53 |
| Bromodichloromethane | ug/kg | | | | < 5.1 | 5.1 | U | 1.0 | < 6.0 | 6.0 | U | 1.2 | < 5.3 | 5.3 | U | 1.1 |
| Bromoform | ug/kg | | | | < 5.1 | 5.1 | U | 1.0 | < 6.0 | 6.0 | U | 1.2 | < 5.3 | 5.3 | U | 1.1 |
| Bromomethane | ug/kg | | | | < 5.1 | 5.1 | U | 2.0 | < 6.0 | 6.0 | U | 2.4 | < 5.3 | 5.3 | U | 2.1 |
| Carbon Disulfide | ug/kg | | | | < 5.1 | 5.1 | U | 1.0 | < 6.0 | 6.0 | U | 1.2 | 6.9 | 5.3 | | 1.1 |
| Carbon tetrachloride | ug/kg | 1,400 | 2,400 | 760 | < 5.1 | 5.1 | U | 1.0 | < 6.0 | 6.0 | U | 1.2 | < 5.3 | 5.3 | U | 1.1 |
| Chlorobenzene | ug/kg | 100,000 | 100,000 | 1,100 | < 5.1 | 5.1 | U | 5.1 | < 6.0 | 6.0 | U | 6.0 | < 5.3 | 5.3 | U | 5.3 |
| Chloroethane | ug/kg | | | | < 5.1 | 5.1 | U | 0.51 | < 6.0 | 6.0 | U | 0.60 | < 5.3 | 5.3 | U | 0.53 |
| Chloroform | ug/kg | 10,000 | 49,000 | 370 | < 5.1 | 5.1 | U | 0.51 | < 6.0 | 6.0 | U | 0.60 | < 5.3 | 5.3 | U | 0.53 |
| Chloromethane | ug/kg | | | | < 5.1 | 5.1 | U | 1.0 | < 6.0 | 6.0 | U | 1.2 | < 5.3 | 5.3 | U | 1.1 |
| cis-1,2-Dichloroethene | ug/kg | 59,000 | 100,000 | 250 | < 5.1 | 5.1 | U | 0.51 | < 6.0 | 6.0 | U | 0.60 | < 5.3 | 5.3 | U | 0.53 |
| cis-1,3-Dichloropropene | ug/kg | | | | < 5.1 | 5.1 | U | 0.51 | < 6.0 | 6.0 | U | 0.60 | < 5.3 | 5.3 | U | 0.53 |

# TABLE 5E
## SUBSURFACE SOIL LABORATORY ANALYTICAL RESULTS SUMMARY

## REMEDIAL INVESTIGATION
## 109-125 MARBLEDALE ROAD
## TUCKAHOE, NEW YORK
## BCP # C360143

| Analyte | Lab Sample Id<br>Collection Date<br>Client Id<br>Matrix | Part 375 Soil Cleanup Objectives | | | BH78385<br>2/26/2015<br>TB-12 28-30<br>Solid | | | | BH78390<br>2/26/2015<br>TB-13 4-6<br>Solid | | | | BH78391<br>2/26/2015<br>TB-13 26-28<br>Solid | | | |
|---|---|---|---|---|---|---|---|---|---|---|---|---|---|---|---|---|
| | Units | NY-Res. | NY-ResRestrict | NY-UnRestricted | Result | RL | Qual | MDL | Result | RL | Qual | MDL | Result | RL | Qual | MDL |
| Cyclohexane | ug/kg | | | | < 5.1 | 5.1 | U | 1.0 | < 6.0 | 6.0 | U | 1.2 | < 5.3 | 5.3 | U | 1.1 |
| Dibromochloromethane | ug/kg | | | | < 5.1 | 5.1 | U | 1.0 | < 6.0 | 6.0 | U | 1.2 | < 5.3 | 5.3 | U | 1.1 |
| Dichlorodifluoromethane | ug/kg | | | | < 5.1 | 5.1 | U | 0.51 | < 6.0 | 6.0 | U | 0.60 | < 200 | 200 | | 0.53 |
| Ethylbenzene | ug/kg | 30,000 | 41,000 | 1,000 | < 5.1 | 5.1 | U | 0.51 | < 6.0 | 6.0 | J | 0.60 | < 5.3 | 5.3 | U | 0.53 |
| Isopropylbenzene | ug/kg | | | | < 5.1 | 5.1 | U | 0.51 | < 6.0 | 6.0 | J | 0.60 | < 5.3 | 5.3 | U | 0.53 |
| m&p-Xylene | ug/kg | | | | < 5.1 | 5.1 | U | 1.0 | < 6.0 | 6.0 | J | 1.2 | < 5.3 | 5.3 | U | 1.1 |
| Methyl ethyl ketone | ug/kg | 100,000 | 100,000 | 120 | < 30 | 30 | U | 5.1 | < 36 | 36 | U | 6.0 | < 32 | 32 | J | 5.3 |
| Methyl t-butyl ether (MTBE) | ug/kg | 62,000 | 100,000 | 930 | < 10 | 10 | U | 1.0 | < 12 | 12 | U | 1.2 | < 11 | 11 | U | 1.1 |
| Methylacetate | ug/kg | | | | < 4.0 | 4.0 | U | 2.5 | < 4.8 | 4.8 | U | 3.0 | < 4.3 | 4.3 | U | 2.7 |
| Methylcyclohexane | ug/kg | | | | < 5.1 | 5.1 | U | 1.0 | < 6.0 | 6.0 | U | 1.2 | < 5.3 | 5.3 | U | 1.1 |
| Methylene chloride | ug/kg | 51,000 | 100,000 | 50 | < 5.1 | 5.1 | U | 5.1 | < 6.0 | 6.0 | U | 6.0 | < 5.3 | 5.3 | U | 5.3 |
| o-Xylene | ug/kg | | | | < 5.1 | 5.1 | U | 1.0 | < 6.0 | 6.0 | J | 1.2 | < 5.3 | 5.3 | U | 1.1 |
| Styrene | ug/kg | | | | < 5.1 | 5.1 | U | 0.51 | < 6.0 | 6.0 | U | 0.60 | < 5.3 | 5.3 | U | 0.53 |
| Tetrachloroethene | ug/kg | 5,500 | 19,000 | 1,300 | < 5.1 | 5.1 | U | 1.0 | < 6.0 | 6.0 | U | 1.2 | < 5.3 | 5.3 | U | 1.1 |
| Toluene | ug/kg | 100,000 | 100,000 | 700 | < 5.1 | 5.1 | U | 0.51 | < 6.0 | 6.0 | U | 0.60 | < 5.3 | 5.3 | J | 0.53 |
| Total Xylenes | ug/kg | | 100,000 | 260 | < 5.1 | 5.1 | U | 1.0 | < 6.0 | 6.0 | U | 1.2 | < 5.3 | 5.3 | U | 1.1 |
| trans-1,2-Dichloroethene | ug/kg | 100,000 | 100,000 | 190 | < 5.1 | 5.1 | U | 0.51 | < 6.0 | 6.0 | U | 0.60 | < 5.3 | 5.3 | U | 0.53 |
| trans-1,3-Dichloropropene | ug/kg | | | | < 5.1 | 5.1 | U | 0.51 | < 6.0 | 6.0 | U | 0.60 | < 5.3 | 5.3 | U | 0.53 |
| Trichloroethene | ug/kg | 10,000 | 21,000 | 470 | < 5.1 | 5.1 | U | 0.51 | < 6.0 | 6.0 | U | 0.60 | < 5.3 | 5.3 | U | 0.53 |
| Trichlorofluoromethane | ug/kg | | | | < 5.1 | 5.1 | U | 1.0 | < 6.0 | 6.0 | U | 1.2 | < 5.3 | 5.3 | U | 1.1 |
| Trichlorotrifluoroethane | ug/kg | | | | < 5.1 | 5.1 | U | 0.51 | < 6.0 | 6.0 | U | 0.60 | < 5.3 | 5.3 | U | 0.53 |
| Vinyl chloride | ug/kg | 210 | 900 | 20 | < 5.1 | 5.1 | U | 0.51 | < 6.0 | 6.0 | U | 0.60 | < 5.3 | 5.3 | U | 0.53 |
| **1,4-dioxane By SW8260C** | | | | | | | | | | | | | | | | |
| 1,4-dioxane | ug/kg | 9,800 | 13,000 | 100 | < 100 | 100 | U | 100 | < 100 | 100 | U | 100 | < 100 | 100 | U | 43 |
| **Semivolatiles By SW8270D** | | | | | | | | | | | | | | | | |
| 1,1-Biphenyl | ug/Kg | | | | < 270 | 270 | U | 120 | < 1400 | 1,400 | U | 590 | < 280 | 280 | U | 120 |
| 1,2,4,5-Tetrachlorobenzene | ug/Kg | | | | < 270 | 270 | U | 140 | < 1400 | 1,400 | U | 680 | < 280 | 280 | U | 140 |
| 2,3,4,6-tetrachlorophenol | ug/Kg | | | | < 270 | 270 | U | 180 | < 1400 | 1,400 | U | 910 | < 280 | 280 | U | 190 |
| 2,4,5-Trichlorophenol | ug/Kg | | | | < 270 | 270 | U | 210 | < 1400 | 1,400 | U | 1100 | < 280 | 280 | U | 220 |
| 2,4,6-Trichlorophenol | ug/Kg | | | | < 270 | 270 | U | 120 | < 1400 | 1,400 | U | 620 | < 280 | 280 | U | 130 |
| 2,4-Dichlorophenol | ug/Kg | | | | < 270 | 270 | U | 140 | < 1400 | 1,400 | U | 680 | < 280 | 280 | U | 140 |

# TABLE 5E
## SUBSURFACE SOIL LABORATORY ANALYTICAL RESULTS SUMMARY

## REMEDIAL INVESTIGATION
## 109-125 MARBLEDALE ROAD
## TUCKAHOE, NEW YORK
## BCP # C360143

| Analyte | Lab Sample Id<br>Collection Date<br>Client Id<br>Matrix | Part 375 Soil Cleanup Objectives | | | BH78385<br>2/26/2015<br>TB-12 28-30<br>Solid | | | | BH78390<br>2/26/2015<br>TB-13 4-6<br>Solid | | | | BH78391<br>2/26/2015<br>TB-13 26-28<br>Solid | | | |
|---|---|---|---|---|---|---|---|---|---|---|---|---|---|---|---|---|
| | Units | NY-Res. | NY-ResRestrict | NY-UnRestricted | Result | RL | Qual | MDL | Result | RL | Qual | MDL | Result | RL | Qual | MDL |
| 2,4-Dimethylphenol | ug/Kg | | | | < 270 | 270 | U | 96 | < 1400 | 1,400 | U | 480 | < 280 | 280 | U | 100 |
| 2,4-Dinitrophenol | ug/Kg | | | | < 620 | 620 | U | 270 | < 3100 | 3,100 | U | 1400 | < 650 | 650 | U | 280 |
| 2,4-Dinitrotoluene | ug/Kg | | | | < 270 | 270 | U | 150 | < 1400 | 1,400 | U | 760 | < 280 | 280 | U | 160 |
| 2,6-Dinitrotoluene | ug/Kg | | | | < 270 | 270 | U | 120 | < 1400 | 1,400 | U | 610 | < 280 | 280 | U | 130 |
| 2-Chloronaphthalene | ug/Kg | | | | < 270 | 270 | U | 110 | < 1400 | 1,400 | U | 550 | < 280 | 280 | U | 120 |
| 2-Chlorophenol | ug/Kg | | | | < 270 | 270 | U | 110 | < 1400 | 1,400 | U | 550 | < 280 | 280 | U | 120 |
| 2-Methylnaphthalene | ug/Kg | | | | < 270 | 270 | J | 110 | < 1400 | 1,400 | U | 580 | < 280 | 280 | U | 120 |
| 2-Methylphenol (o-cresol) | ug/Kg | 100,000 | 100,000 | 330 | < 270 | 270 | U | 180 | < 1400 | 1,400 | U | 910 | < 280 | 280 | U | 190 |
| 2-Nitroaniline | ug/Kg | | | | < 620 | 620 | U | 390 | < 3100 | 3,100 | U | 2000 | < 650 | 650 | U | 410 |
| 2-Nitrophenol | ug/Kg | | | | < 270 | 270 | U | 240 | < 1400 | 1,400 | U | 1200 | < 280 | 280 | U | 260 |
| 3&4-Methylphenol (m&p-cresol) | ug/Kg | | | | < 390 | 390 | U | 150 | < 1900 | 1,900 | U | 760 | < 410 | 410 | U | 160 |
| 3,3'-Dichlorobenzidine | ug/Kg | | | | < 460 | 460 | U | 150 | < 2300 | 2,300 | U | 770 | < 490 | 490 | U | 160 |
| 3-Nitroaniline | ug/Kg | | | | < 620 | 620 | U | 840 | < 3100 | 3,100 | U | 4200 | < 650 | 650 | U | 880 |
| 4,6-Dinitro-2-methylphenol | ug/Kg | | | | < 1100 | 1,100 | U | 270 | < 5600 | 5,600 | U | 1400 | < 1200 | 1,200 | U | 280 |
| 4-Bromophenyl phenyl ether | ug/Kg | | | | < 390 | 390 | U | 110 | < 1900 | 1,900 | U | 570 | < 410 | 410 | U | 120 |
| 4-Chloro-3-methylphenol | ug/Kg | | | | < 270 | 270 | U | 140 | < 1400 | 1,400 | U | 680 | < 280 | 280 | U | 140 |
| 4-Chloroaniline | ug/Kg | | | | < 270 | 270 | U | 180 | < 1400 | 1,400 | U | 900 | < 280 | 280 | U | 190 |
| 4-Chlorophenyl phenyl ether | ug/Kg | | | | < 270 | 270 | U | 130 | < 1400 | 1,400 | U | 650 | < 280 | 280 | U | 140 |
| 4-Nitroaniline | ug/Kg | | | | < 620 | 620 | U | 130 | < 3100 | 3,100 | U | 650 | < 650 | 650 | U | 140 |
| 4-Nitrophenol | ug/Kg | | | | < 1100 | 1,100 | U | 170 | < 5600 | 5,600 | U | 870 | < 1200 | 1,200 | U | 180 |
| Acenaphthene | ug/Kg | 100,000 | 100,000 | 20,000 | < 270 | 270 | J | 120 | < 1400 | 1,400 | J | 590 | < 280 | 280 | U | 120 |
| Acenaphthylene | ug/Kg | 100,000 | 100,000 | 100,000 | < 270 | 270 | U | 110 | < 1400 | 1,400 | U | 540 | < 280 | 280 | U | 110 |
| Acetophenone | ug/Kg | | | | < 270 | 270 | U | 120 | < 1400 | 1,400 | U | 600 | < 280 | 280 | U | 130 |
| Anthracene | ug/Kg | 100,000 | 100,000 | 100,000 | 570 | 270 | | 130 | 2,200 | 1,400 | | 630 | < 280 | 280 | U | 130 |
| Atrazine | ug/Kg | | | | < 270 | 270 | U | 150 | < 1400 | 1,400 | U | 770 | < 280 | 280 | U | 160 |
| Benz(a)anthracene | ug/Kg | 1,000 | 1,000 | 1,000 | 860 | 270 | | 130 | 5,900 | 1,400 | | 650 | < 280 | 280 | J | 140 |
| Benzaldehyde | ug/Kg | | | | < 270 | 270 | U | 110 | < 1400 | 1,400 | U | 570 | < 280 | 280 | U | 120 |
| Benzo(a)pyrene | ug/Kg | 1,000 | 1,000 | 1,000 | 750 | 270 | | 130 | 5,200 | 1,400 | | 630 | < 280 | 280 | J | 130 |
| Benzo(b)fluoranthene | ug/Kg | 1,000 | 1,000 | 1,000 | 980 | 270 | | 130 | 6,400 | 1,400 | | 660 | < 280 | 280 | J | 140 |
| Benzo(ghi)perylene | ug/Kg | 100,000 | 100,000 | 100,000 | 490 | 270 | | 120 | 1,900 | 1,400 | | 630 | < 280 | 280 | U | 130 |
| Benzo(k)fluoranthene | ug/Kg | 1,000 | 3,900 | 800 | 420 | 270 | | 130 | 2,200 | 1,400 | | 640 | < 280 | 280 | U | 130 |

# TABLE 5E
## SUBSURFACE SOIL LABORATORY ANALYTICAL RESULTS SUMMARY

## REMEDIAL INVESTIGATION
## 109-125 MARBLEDALE ROAD
## TUCKAHOE, NEW YORK
## BCP # C360143

| Analyte | Lab Sample Id<br>Collection Date<br>Client Id<br>Matrix | Part 375 Soil Cleanup Objectives | | | BH78385<br>2/26/2015<br>TB-12 28-30<br>Solid | | | | BH78390<br>2/26/2015<br>TB-13 4-6<br>Solid | | | | BH78391<br>2/26/2015<br>TB-13 26-28<br>Solid | | | |
|---|---|---|---|---|---|---|---|---|---|---|---|---|---|---|---|---|
| | Units | NY-Res. | NY-ResRestrict | NY-UnRestricted | Result | RL | Qual | MDL | Result | RL | Qual | MDL | Result | RL | Qual | MDL |
| Benzyl butyl phthalate | ug/Kg | | | | < 270 | 270 | U | 99 | < 1400 | 1,400 | U | 500 | < 280 | 280 | U | 100 |
| Bis(2-chloroethoxy)methane | ug/Kg | | | | < 270 | 270 | U | 110 | < 1400 | 1,400 | U | 530 | < 280 | 280 | U | 110 |
| Bis(2-chloroethyl)ether | ug/Kg | | | | < 390 | 390 | U | 100 | < 1900 | 1,900 | U | 520 | < 410 | 410 | U | 110 |
| Bis(2-chloroisopropyl)ether | ug/Kg | | | | < 270 | 270 | U | 110 | < 1400 | 1,400 | U | 540 | < 280 | 280 | U | 110 |
| Bis(2-ethylhexyl)phthalate | ug/Kg | | | | 640 | 270 | | 110 | < 1400 | 1,400 | U | 560 | < 280 | 280 | J | 120 |
| Caprolactam | ug/Kg | | | | < 270 | 270 | U | 270 | < 1400 | 1,400 | U | 1400 | < 280 | 280 | U | 280 |
| Carbazole | ug/Kg | | | | < 1100 | 1,100 | J | 290 | < 5600 | 5,600 | U | 1500 | < 1200 | 1,200 | U | 310 |
| Chrysene | ug/Kg | 1,000 | 3,900 | 1,000 | 940 | 270 | | 130 | 5,600 | 1,400 | | 650 | < 280 | 280 | J | 140 |
| Dibenz(a,h)anthracene | ug/Kg | 330 | 330 | 330 | < 270 | 270 | U | 120 | < 1400 | 1,400 | U | 630 | < 280 | 280 | U | 130 |
| Dibenzofuran | ug/Kg | | | 7,000 | 280 | 270 | | 110 | < 1400 | 1,400 | U | 570 | < 280 | 280 | U | 120 |
| Diethyl phthalate | ug/Kg | | | | < 270 | 270 | U | 120 | < 1400 | 1,400 | U | 610 | < 280 | 280 | U | 130 |
| Dimethylphthalate | ug/Kg | | | | < 270 | 270 | U | 120 | < 1400 | 1,400 | U | 600 | < 280 | 280 | U | 130 |
| Di-n-butylphthalate | ug/Kg | | | | < 270 | 270 | U | 100 | < 1400 | 1,400 | U | 510 | < 280 | 280 | U | 110 |
| Di-n-octylphthalate | ug/Kg | | | | < 270 | 270 | U | 99 | < 1400 | 1,400 | U | 500 | < 280 | 280 | U | 100 |
| Fluoranthene | ug/Kg | 100,000 | 100,000 | 100,000 | 2,600 | 270 | | 120 | 9,200 | 1,400 | | 630 | 450 | 280 | | 130 |
| Fluorene | ug/Kg | 100,000 | 100,000 | 30,000 | 400 | 270 | | 130 | < 1400 | 1,400 | J | 640 | < 280 | 280 | U | 130 |
| Hexachlorobenzene | ug/Kg | | | | < 270 | 270 | U | 110 | < 1400 | 1,400 | U | 570 | < 280 | 280 | U | 120 |
| Hexachlorobutadiene | ug/Kg | | | | < 270 | 270 | U | 140 | < 1400 | 1,400 | U | 700 | < 280 | 280 | U | 150 |
| Hexachlorocyclopentadiene | ug/Kg | | | | < 270 | 270 | U | 120 | < 1400 | 1,400 | U | 590 | < 280 | 280 | U | 120 |
| Hexachloroethane | ug/Kg | | | | < 270 | 270 | U | 120 | < 1400 | 1,400 | U | 580 | < 280 | 280 | U | 120 |
| Indeno(1,2,3-cd)pyrene | ug/Kg | 500 | 500 | 500 | 420 | 270 | | 130 | 1,900 | 1,400 | | 640 | < 280 | 280 | U | 130 |
| Isophorone | ug/Kg | | | | < 270 | 270 | U | 110 | < 1400 | 1,400 | U | 540 | < 280 | 280 | U | 110 |
| Naphthalene | ug/Kg | 100,000 | 100,000 | 12,000 | < 270 | 270 | U | 110 | < 1400 | 1,400 | U | 560 | < 280 | 280 | U | 120 |
| Nitrobenzene | ug/Kg | | | | < 270 | 270 | U | 130 | < 1400 | 1,400 | U | 680 | < 280 | 280 | U | 140 |
| N-Nitrosodimethylamine | ug/Kg | | | | < 390 | 390 | U | 110 | < 1900 | 1,900 | U | 550 | < 410 | 410 | U | 110 |
| N-Nitrosodi-n-propylamine | ug/Kg | | | | < 270 | 270 | U | 120 | < 1400 | 1,400 | U | 630 | < 280 | 280 | U | 130 |
| N-Nitrosodiphenylamine | ug/Kg | | | | < 390 | 390 | U | 150 | < 1900 | 1,900 | U | 740 | < 410 | 410 | U | 160 |
| Pentachlorophenol | ug/Kg | 2,400 | 6,700 | 800 | < 390 | 390 | U | 150 | < 1900 | 1,900 | U | 730 | < 410 | 410 | U | 150 |
| Phenanthrene | ug/Kg | 100,000 | 100,000 | 100,000 | 2,500 | 270 | | 110 | 7,000 | 1,400 | | 550 | 330 | 280 | | 120 |
| Phenol | ug/Kg | 100,000 | 100,000 | 330 | < 270 | 270 | U | 120 | < 1400 | 1,400 | U | 620 | < 280 | 280 | U | 130 |
| Pyrene | ug/Kg | 100,000 | 100,000 | 100,000 | 2,200 | 270 | | 130 | 7,400 | 1,400 | | 670 | 410 | 280 | | 140 |

# TABLE 5E
## SUBSURFACE SOIL LABORATORY ANALYTICAL RESULTS SUMMARY

## REMEDIAL INVESTIGATION
## 109-125 MARBLEDALE ROAD
## TUCKAHOE, NEW YORK
## BCP # C360143

| Analyte | Lab Sample Id<br>Collection Date<br>Client Id<br>Matrix | Part 375 Soil Cleanup Objectives | | | BH78385<br>2/26/2015<br>TB-12 28-30<br>Solid | | | | BH78390<br>2/26/2015<br>TB-13 4-6<br>Solid | | | | BH78391<br>2/26/2015<br>TB-13 26-28<br>Solid | | | |
|---|---|---|---|---|---|---|---|---|---|---|---|---|---|---|---|---|
| | Units | NY-Res. | NY-ResRestrict | NY-UnRestricted | Result | RL | Qual | MDL | Result | RL | Qual | MDL | Result | RL | Qual | MDL |
| **PCBs By SW8082A** | | | | | | | | | | | | | | | | |
| PCB-1016 | ug/Kg | 1,000 | | 100 | < 78 | 78 | U | 78 | < 78 | 78 | U | 78 | < 82 | 82 | U | 82 |
| PCB-1221 | ug/Kg | 1,000 | | 100 | < 78 | 78 | U | 78 | < 78 | 78 | U | 78 | < 82 | 82 | U | 82 |
| PCB-1232 | ug/Kg | 1,000 | | 100 | < 78 | 78 | U | 78 | < 78 | 78 | U | 78 | < 82 | 82 | U | 82 |
| PCB-1242 | ug/Kg | 1,000 | | 100 | < 78 | 78 | U | 78 | < 78 | 78 | U | 78 | < 82 | 82 | U | 82 |
| PCB-1248 | ug/Kg | 1,000 | | 100 | < 78 | 78 | U | 78 | < 78 | 78 | U | 78 | < 82 | 82 | U | 82 |
| PCB-1254 | ug/Kg | 1,000 | | 100 | < 78 | 78 | U | 78 | < 78 | 78 | U | 78 | < 82 | 82 | U | 82 |
| PCB-1260 | ug/Kg | 1,000 | | 100 | < 78 | 78 | U | 78 | < 78 | 78 | U | 78 | < 82 | 82 | U | 82 |
| PCB-1262 | ug/Kg | | | | < 78 | 78 | U | 78 | < 78 | 78 | U | 78 | < 82 | 82 | U | 82 |
| PCB-1268 | ug/Kg | | | | < 78 | 78 | U | 78 | < 78 | 78 | U | 78 | < 82 | 82 | U | 82 |
| **Metals, Total** | | | | | | | | | | | | | | | | |
| Aluminum | mg/Kg | | | | 24,900 | 550 | | 73 | 8,050 | 58 | | 7.7 | 10,400 | 56 | | 7.4 |
| Antimony | mg/Kg | | | | < 3.7 | 3.7 | U | 1.8 | < 3.9 | 3.9 | U | 1.9 | < 3.7 | 3.7 | U | 1.9 |
| Arsenic | mg/Kg | 16 | 16 | 13 | 1.5 | 0.7 | | 0.73 | 4.5 | 0.8 | | 0.77 | 1.2 | 0.7 | | 0.74 |
| Barium | mg/Kg | 350 | 400 | 350 | 157 | 0.37 | | 0.37 | 76.9 | 0.39 | | 0.39 | 77.7 | 0.37 | | 0.37 |
| Beryllium | mg/Kg | 14 | 72 | 7.2 | 0.54 | 0.29 | | 0.15 | 0.32 | 0.31 | | 0.15 | 0.31 | 0.30 | | 0.15 |
| Cadmium | mg/Kg | 2.5 | 4.3 | 2.5 | < 0.37 | 0.37 | U | 0.15 | < 0.39 | 0.39 | U | 0.15 | < 0.37 | 0.37 | U | 0.15 |
| Calcium | mg/Kg | | | | 10,500 | 5.5 | N | 34 | 31,500 | 58 | N | 36 | 15,200 | 56 | N | 34 |
| Chromium | mg/Kg | | | 30 | 37.8 | 0.37 | | 0.37 | 24 | 0.39 | | 0.39 | 31.4 | 0.37 | | 0.37 |
| Cobalt | mg/Kg | | | | 15 | 0.37 | | 0.37 | 7.17 | 0.39 | | 0.39 | 9.14 | 0.37 | | 0.37 |
| Copper | mg/kg | 270 | 270 | 50 | 107 | 0.37 | | 0.37 | 35.4 | 0.39 | | 0.39 | 20.3 | 0.37 | | 0.37 |
| Iron | mg/Kg | | | | 28,800 | 55 | | 37 | 13,600 | 58 | | 39 | 16,400 | 56 | | 37 |
| Lead | mg/Kg | 400 | 400 | 63 | 95.8 | 0.37 | | 0.37 | 82.8 | 0.39 | | 0.39 | 11.8 | 0.37 | | 0.37 |
| Magnesium | mg/Kg | | | | 11,100 | 55 | | 37 | 16,600 | 58 | | 39 | 7,560 | 56 | | 37 |
| Manganese | mg/Kg | 2,000 | 2,000 | 1,600 | 380 | 3.7 | | 3.7 | 195 | 3.9 | | 3.9 | 302 | 3.7 | | 3.7 |
| Mercury | mg/Kg | 0.81 | 0.81 | 0.18 | 0.1 | 0.03 | | 0.02 | 0.32 | 0.03 | | 0.02 | < 0.03 | 0.03 | U | 0.02 |
| Nickel | mg/Kg | 140 | 310 | 30 | 28.9 | 0.37 | | 0.37 | 25.3 | 0.39 | | 0.39 | 20.8 | 0.37 | | 0.37 |
| Potassium | mg/Kg | | | | 5,300 | 55 | N | 29 | 1,930 | 5.8 | N | 3.0 | 2,650 | 5.6 | N | 2.9 |
| Selenium | mg/Kg | 36 | 180 | 3.9 | < 1.5 | 1.5 | U | 1.2 | < 1.5 | 1.5 | U | 1.3 | < 1.5 | 1.5 | U | 1.3 |
| Silver | mg/Kg | 36 | 180 | 2 | < 0.37 | 0.37 | U | 0.37 | < 0.39 | 0.39 | U | 0.39 | < 0.37 | 0.37 | U | 0.37 |
| Sodium | mg/Kg | | | | 312 | 5.5 | N | 3.2 | 230 | 5.8 | N | 3.3 | 198 | 5.6 | N | 3.2 |

# TABLE 5E
## SUBSURFACE SOIL LABORATORY ANALYTICAL RESULTS SUMMARY

## REMEDIAL INVESTIGATION
## 109-125 MARBLEDALE ROAD
## TUCKAHOE, NEW YORK
## BCP # C360143

| Analyte | Lab Sample Id<br>Collection Date<br>Client Id<br>Matrix | Part 375 Soil Cleanup Objectives | | | BH78385<br>2/26/2015<br>TB-12 28-30<br>Solid | | | | BH78390<br>2/26/2015<br>TB-13 4-6<br>Solid | | | | BH78391<br>2/26/2015<br>TB-13 26-28<br>Solid | | | |
|---|---|---|---|---|---|---|---|---|---|---|---|---|---|---|---|---|
| | Units | NY-Res. | NY-ResRestrict | NY-UnRestricted | Result | RL | Qual | MDL | Result | RL | Qual | MDL | Result | RL | Qual | MDL |
| Thallium | mg/Kg | | | | < 3.3 | 3.3 | U | 1.5 | < 3.5 | 3.5 | U | 1.5 | < 3.3 | 3.3 | U | 1.5 |
| Vanadium | mg/Kg | | | | 47.9 | 0.37 | | 0.37 | 32.6 | 0.39 | | 0.39 | 31.1 | 0.37 | | 0.37 |
| Zinc | mg/Kg | 2,200 | 10,000 | 109 | 168 | 3.7 | | 3.7 | 215 | 3.9 | | 3.9 | 58.8 | 0.37 | | 0.37 |
| Miscellaneous/Inorganics | | | | | | | | | | | | | | | | |
| Percent Solid | % | | | | 84 | | | | 84 | | | | 80 | | | |
| Total Cyanide | mg/Kg | | | | < 0.54 | 0.54 | U | 0.27 | < 0.54 | 0.54 | U | 0.27 | < 0.57 | 0.57 | U | 0.28 |

Result Detected

RL Exceeds Criteria

Result Exceeds Criteria

| | |
|---|---|
| U | The compound was anlayzed for but not detected at or above the MDL.<br>The number immediately preceding the "U" represents the PQL reporting level<br>corrected for percent solids, weight and/or volume calculations, and dilution factors. |
| J | The value is estimated. This flag is used<br>a) on form 1 when the compound is reported above the MDL, but below the PQL, and<br>b) on the Tentatively Identified Compounds (TIC) form for all compounds identified. |
| N | The concentration is based on the response fo the nearest internal. This flag<br>is used on the TIC form for all compounds identified. |
| S | This compound is a solvent that is used in the laboratory. Laboratory contamination is<br>suspected if concentration is less than five times the reporting level. |
| D | The reported concentration is the result of a diluted analysis. |
| (*) | See report for comment. |

**TABLE 6A**
**SURFACE SOIL LABORATORY ANALYTICAL RESULTS SUMMARY**

**REMEDIAL INVESTIGATION**
**109-125 MARBLEDALE ROAD**
**TUCKAHOE, NEW YORK**
**BCP #C360143**

| Analytes | Lab Sample Id<br>Collection Date<br>Client Id<br>Matrix | Part 375 Soil Cleanup Objectives | | | BJ07743<br>4/23/2015<br>SS-1<br>Soil | | | | BJ07744<br>4/23/2015<br>SS-2<br>Soil | | | | BJ07745<br>4/23/2015<br>SS-3<br>Soil | | | | BJ07746<br>4/23/2015<br>SS-4<br>Soil | | | | BJ07747<br>4/23/2015<br>SS-5<br>Soil | | | | BJ07748<br>4/23/2015<br>SS-6<br>Soil | | | | BJ07749<br>4/23/2015<br>SS-7<br>Soil | | | |
|---|---|---|---|---|---|---|---|---|---|---|---|---|---|---|---|---|---|---|---|---|---|---|---|---|---|---|---|---|---|---|---|---|
| | Units | NY-Res. | NY-ResRestrict | NY-UnRestricted | Result | RL | Qual | MDL | Result | RL | Qual | MDL | Result | RL | Qual | MDL | Result | RL | Qual | MDL | Result | RL | Qual | MDL | Result | RL | Qual | MDL | Result | RL | Qual | MDL |
| **Volatiles By SW8260C** | | | | | | | | | | | | | | | | | | | | | | | | | | | | | | | | |
| 1,1,1-Trichloroethane | ug/Kg | 100,000 | 100,000 | 680 | < 5.7 | 5.7 | U | 0.57 | < 4.8 | 4.8 | U | 0.48 | < 10 | 10 | U | 1.0 | < 8.1 | 8.1 | U | 0.81 | < 7.7 | 7.7 | U | 0.77 | < 11 | 11 | U | 1.1 | < 14 | 14 | U | 1.4 |
| 1,1,2,2-Tetrachloroethane | ug/Kg | | | | < 5.7 | 5.7 | U | 1.1 | < 4.8 | 4.8 | U | 0.97 | < 10 | 10 | U | 2.0 | < 8.1 | 8.1 | U | 1.6 | < 7.7 | 7.7 | U | 1.5 | < 11 | 11 | U | 2.3 | < 14 | 14 | U | 2.8 |
| 1,1,2-Trichloroethane | ug/Kg | | | | < 5.7 | 5.7 | U | 1.1 | < 4.8 | 4.8 | U | 0.97 | < 10 | 10 | U | 2.0 | < 8.1 | 8.1 | U | 1.6 | < 7.7 | 7.7 | U | 1.5 | < 11 | 11 | U | 2.3 | < 14 | 14 | U | 2.8 |
| 1,1-Dichloroethane | ug/Kg | 19,000 | 26,000 | 270 | < 5.7 | 5.7 | U | 1.1 | < 4.8 | 4.8 | U | 0.97 | < 10 | 10 | U | 2.0 | < 8.1 | 8.1 | U | 1.6 | < 7.7 | 7.7 | U | 1.5 | < 11 | 11 | U | 2.3 | < 14 | 14 | U | 2.8 |
| 1,1-Dichloroethene | ug/Kg | 100,000 | 100,000 | 330 | < 5.7 | 5.7 | U | 0.57 | < 4.8 | 4.8 | U | 0.48 | < 10 | 10 | U | 1.0 | < 8.1 | 8.1 | U | 0.81 | < 7.7 | 7.7 | U | 0.77 | < 11 | 11 | U | 1.1 | < 14 | 14 | U | 1.4 |
| 1,2,3-Trichlorobenzene | ug/Kg | | | | < 330 | 330 | U | 66 | < 4.8 | 4.8 | U | 0.97 | < 350 | 350 | U | 69 | < 8.1 | 8.1 | U | 1.6 | < 7.7 | 7.7 | U | 1.5 | < 11 | 11 | U | 2.3 | < 320 | 320 | U | 64 |
| 1,2,4-Trichlorobenzene | ug/Kg | | | | < 330 | 330 | U | 66 | < 4.8 | 4.8 | U | 0.97 | < 350 | 350 | U | 69 | < 8.1 | 8.1 | U | 1.6 | < 7.7 | 7.7 | U | 1.5 | < 11 | 11 | U | 2.3 | < 320 | 320 | U | 64 |
| 1,2-Dibromo-3-chloropropane | ug/Kg | | | | < 330 | 330 | U | 66 | < 4.8 | 4.8 | U | 0.97 | < 350 | 350 | U | 69 | < 8.1 | 8.1 | U | 1.6 | < 7.7 | 7.7 | U | 1.5 | < 11 | 11 | U | 2.3 | < 320 | 320 | U | 64 |
| 1,2-Dibromoethane | ug/Kg | | | | < 5.7 | 5.7 | U | 0.57 | < 4.8 | 4.8 | U | 0.48 | < 10 | 10 | U | 1.0 | < 8.1 | 8.1 | U | 0.81 | < 7.7 | 7.7 | U | 0.77 | < 11 | 11 | U | 1.1 | < 14 | 14 | U | 1.4 |
| 1,2-Dichlorobenzene | ug/Kg | 100,000 | 100,000 | 1,100 | < 330 | 330 | U | 33 | < 4.8 | 4.8 | U | 0.48 | < 350 | 350 | U | 35 | < 8.1 | 8.1 | U | 0.81 | < 7.7 | 7.7 | U | 0.77 | < 11 | 11 | U | 1.1 | < 320 | 320 | U | 32 |
| 1,2-Dichloroethane | ug/Kg | 2,300 | 3,100 | 20 | < 5.7 | 5.7 | U | 0.57 | < 4.8 | 4.8 | U | 0.48 | < 10 | 10 | U | 1.0 | < 8.1 | 8.1 | U | 0.81 | < 7.7 | 7.7 | U | 0.77 | < 11 | 11 | U | 1.1 | < 14 | 14 | U | 1.4 |
| 1,2-Dichloropropane | ug/Kg | | | | < 5.7 | 5.7 | U | 1.1 | < 4.8 | 4.8 | U | 0.97 | < 10 | 10 | U | 2.0 | < 8.1 | 8.1 | U | 1.6 | < 7.7 | 7.7 | U | 1.5 | < 11 | 11 | U | 2.3 | < 14 | 14 | U | 2.8 |
| 1,3-Dichlorobenzene | ug/Kg | 17,000 | 49,000 | 2,400 | < 330 | 330 | U | 33 | < 4.8 | 4.8 | U | 0.48 | < 350 | 350 | U | 35 | < 8.1 | 8.1 | U | 0.81 | < 7.7 | 7.7 | U | 0.77 | < 11 | 11 | U | 1.1 | < 320 | 320 | U | 32 |
| 1,4-Dichlorobenzene | ug/Kg | 9,800 | 13,000 | 1,800 | < 330 | 330 | U | 33 | < 4.8 | 4.8 | U | 0.48 | < 350 | 350 | U | 35 | < 8.1 | 8.1 | U | 0.81 | < 7.7 | 7.7 | U | 0.77 | < 11 | 11 | U | 1.1 | < 320 | 320 | U | 32 |
| 2-Hexanone | ug/Kg | | | | < 28 | 28 | U | 5.7 | < 24 | 24 | U | 4.8 | < 51 | 51 | U | 10 | < 41 | 41 | U | 8.1 | < 39 | 39 | U | 7.7 | < 57 | 57 | U | 11 | < 69 | 69 | U | 14 |
| 4-Methyl-2-pentanone | ug/Kg | | | | < 28 | 28 | U | 5.7 | < 24 | 24 | U | 4.8 | < 51 | 51 | U | 10 | < 41 | 41 | U | 8.1 | < 39 | 39 | U | 7.7 | < 57 | 57 | U | 11 | < 69 | 69 | U | 14 |
| Acetone | ug/Kg | 100,000 | 100,000 | 50 | 6.9 | 50 | JS | 5.7 | < 48 | 48 | U | 4.8 | 370 | 350 | S | 350 | < 50 | 50 | U | 8.1 | 16 | 50 | JS | 7.7 | < 50 | 50 | U | 11 | < 50 | 50 | U | 14 |
| Benzene | ug/Kg | 2,900 | 4,800 | 60 | < 5.7 | 5.7 | U | 0.57 | < 4.8 | 4.8 | U | 0.48 | < 10 | 10 | U | 1.0 | < 8.1 | 8.1 | U | 0.81 | < 7.7 | 7.7 | U | 0.77 | < 11 | 11 | U | 1.1 | < 14 | 14 | U | 1.4 |
| Bromochloromethane | ug/Kg | | | | < 5.7 | 5.7 | U | 0.57 | < 4.8 | 4.8 | U | 0.48 | < 10 | 10 | U | 1.0 | < 8.1 | 8.1 | U | 0.81 | < 7.7 | 7.7 | U | 0.77 | < 11 | 11 | U | 1.1 | < 14 | 14 | U | 1.4 |
| Bromodichloromethane | ug/Kg | | | | < 5.7 | 5.7 | U | 1.1 | < 4.8 | 4.8 | U | 0.97 | < 10 | 10 | U | 2.0 | < 8.1 | 8.1 | U | 1.6 | < 7.7 | 7.7 | U | 1.5 | < 11 | 11 | U | 2.3 | < 14 | 14 | U | 2.8 |
| Bromoform | ug/Kg | | | | < 5.7 | 5.7 | U | 1.1 | < 4.8 | 4.8 | U | 0.97 | < 10 | 10 | U | 2.0 | < 8.1 | 8.1 | U | 1.6 | < 7.7 | 7.7 | U | 1.5 | < 11 | 11 | U | 2.3 | < 14 | 14 | U | 2.8 |
| Bromomethane | ug/Kg | | | | < 5.7 | 5.7 | U | 2.3 | < 4.8 | 4.8 | U | 1.9 | < 10 | 10 | U | 4.1 | < 8.1 | 8.1 | U | 3.2 | < 7.7 | 7.7 | U | 3.1 | < 11 | 11 | U | 4.6 | < 14 | 14 | U | 5.5 |
| Carbon Disulfide | ug/Kg | | | | < 5.7 | 5.7 | U | 1.1 | < 4.8 | 4.8 | U | 0.97 | < 10 | 10 | U | 2.0 | < 8.1 | 8.1 | U | 1.6 | < 7.7 | 7.7 | U | 1.5 | < 11 | 11 | U | 2.3 | < 14 | 14 | U | 2.8 |
| Carbon tetrachloride | ug/Kg | 1,400 | 2,400 | 760 | < 5.7 | 5.7 | U | 1.1 | < 4.8 | 4.8 | U | 0.97 | < 10 | 10 | U | 2.0 | < 8.1 | 8.1 | U | 1.6 | < 7.7 | 7.7 | U | 1.5 | < 11 | 11 | U | 2.3 | < 14 | 14 | U | 2.8 |
| Chlorobenzene | ug/Kg | 100,000 | 100,000 | 1,100 | < 5.7 | 5.7 | U | 0.57 | < 4.8 | 4.8 | U | 0.48 | < 10 | 10 | U | 1.0 | < 8.1 | 8.1 | U | 0.81 | < 7.7 | 7.7 | U | 0.77 | < 11 | 11 | U | 1.1 | < 14 | 14 | U | 1.4 |
| Chloroethane | ug/Kg | | | | < 5.7 | 5.7 | U | 0.57 | < 4.8 | 4.8 | U | 0.48 | < 10 | 10 | U | 1.0 | < 8.1 | 8.1 | U | 0.81 | < 7.7 | 7.7 | U | 0.77 | < 11 | 11 | U | 1.1 | < 14 | 14 | U | 1.4 |
| Chloroform | ug/Kg | 10,000 | 49,000 | 370 | < 5.7 | 5.7 | U | 0.57 | < 4.8 | 4.8 | U | 0.48 | < 10 | 10 | U | 1.0 | < 8.1 | 8.1 | U | 0.81 | < 7.7 | 7.7 | U | 0.77 | < 11 | 11 | U | 1.1 | < 14 | 14 | U | 1.4 |
| Chloromethane | ug/Kg | | | | < 5.7 | 5.7 | U | 1.1 | < 4.8 | 4.8 | U | 0.97 | < 10 | 10 | U | 2.0 | < 8.1 | 8.1 | U | 1.6 | < 7.7 | 7.7 | U | 1.5 | < 11 | 11 | U | 2.3 | < 14 | 14 | U | 2.8 |
| cis-1,2-Dichloroethene | ug/Kg | 59,000 | 100,000 | 250 | < 5.7 | 5.7 | U | 0.57 | < 4.8 | 4.8 | U | 0.48 | < 10 | 10 | U | 1.0 | < 8.1 | 8.1 | U | 0.81 | < 7.7 | 7.7 | U | 0.77 | < 11 | 11 | U | 1.1 | < 14 | 14 | U | 1.4 |
| cis-1,3-Dichloropropene | ug/Kg | | | | < 5.7 | 5.7 | U | 0.57 | < 4.8 | 4.8 | U | 0.48 | < 10 | 10 | U | 1.0 | < 8.1 | 8.1 | U | 0.81 | < 7.7 | 7.7 | U | 0.77 | < 11 | 11 | U | 1.1 | < 14 | 14 | U | 1.4 |
| Cyclohexane | ug/Kg | | | | < 5.7 | 5.7 | U | 1.1 | < 4.8 | 4.8 | U | 0.97 | < 10 | 10 | U | 2.0 | < 8.1 | 8.1 | U | 1.6 | < 7.7 | 7.7 | U | 1.5 | < 11 | 11 | U | 2.3 | < 14 | 14 | U | 2.8 |
| Dibromochloromethane | ug/Kg | | | | < 5.7 | 5.7 | U | 1.1 | < 4.8 | 4.8 | U | 0.97 | < 10 | 10 | U | 2.0 | < 8.1 | 8.1 | U | 1.6 | < 7.7 | 7.7 | U | 1.5 | < 11 | 11 | U | 2.3 | < 14 | 14 | U | 2.8 |
| Dichlorodifluoromethane | ug/Kg | | | | < 5.7 | 5.7 | U | 0.57 | < 4.8 | 4.8 | U | 0.48 | < 10 | 10 | U | 1.0 | < 8.1 | 8.1 | U | 0.81 | < 7.7 | 7.7 | U | 0.77 | < 11 | 11 | U | 1.1 | < 14 | 14 | U | 1.4 |
| Ethylbenzene | ug/Kg | 30,000 | 41,000 | 1,000 | < 5.7 | 5.7 | U | 0.57 | < 4.8 | 4.8 | U | 0.48 | < 10 | 10 | U | 1.0 | < 8.1 | 8.1 | U | 0.81 | < 7.7 | 7.7 | U | 0.77 | < 11 | 11 | U | 1.1 | < 14 | 14 | U | 1.4 |
| Isopropylbenzene | ug/Kg | | | | < 330 | 330 | U | 33 | < 4.8 | 4.8 | U | 0.48 | < 350 | 350 | U | 35 | < 8.1 | 8.1 | U | 0.81 | < 7.7 | 7.7 | U | 0.77 | < 11 | 11 | U | 1.1 | < 320 | 320 | U | 32 |
| m&p-Xylene | ug/Kg | | | | < 5.7 | 5.7 | U | 1.1 | < 4.8 | 4.8 | U | 0.97 | < 10 | 10 | U | 2.0 | < 8.1 | 8.1 | U | 1.6 | < 7.7 | 7.7 | U | 1.5 | < 11 | 11 | U | 2.3 | < 14 | 14 | U | 2.8 |
| Methyl ethyl ketone | ug/Kg | 100,000 | 100,000 | 120 | < 34 | 34 | U | 5.7 | < 29 | 29 | U | 4.8 | < 61 | 61 | U | 10 | < 49 | 49 | U | 8.1 | < 46 | 46 | U | 7.7 | < 68 | 68 | U | 11 | < 83 | 83 | U | 14 |
| Methyl t-butyl ether (MTBE) | ug/Kg | 62,000 | 100,000 | 930 | < 11 | 11 | U | 1.1 | < 9.7 | 9.7 | U | 0.97 | < 20 | 20 | U | 2.0 | < 16 | 16 | U | 1.6 | < 15 | 15 | U | 1.5 | < 23 | 23 | U | 2.3 | < 28 | 28 | U | 2.8 |
| Methylacetate | ug/Kg | | | | < 5.7 | 5.7 | U | 2.8 | < 4.8 | 4.8 | U | 2.4 | < 10 | 10 | U | 5.1 | < 8.1 | 8.1 | U | 4.1 | < 7.7 | 7.7 | U | 3.9 | < 11 | 11 | U | 5.7 | < 14 | 14 | U | 6.9 |
| Methylcyclohexane | ug/Kg | | | | < 5.7 | 5.7 | U | 1.1 | < 4.8 | 4.8 | U | 0.97 | < 10 | 10 | U | 2.0 | < 8.1 | 8.1 | U | 1.6 | < 7.7 | 7.7 | U | 1.5 | < 11 | 11 | U | 2.3 | < 14 | 14 | U | 2.8 |
| Methylene chloride | ug/Kg | 51,000 | 100,000 | 50 | < 5.7 | 5.7 | U | 5.7 | < 4.8 | 4.8 | U | 4.8 | < 10 | 10 | U | 10 | < 8.1 | 8.1 | U | 8.1 | < 7.7 | 7.7 | U | 7.7 | < 11 | 11 | U | 11 | < 14 | 14 | U | 14 |
| o-Xylene | ug/Kg | | | | < 5.7 | 5.7 | U | 1.1 | < 4.8 | 4.8 | U | 0.97 | < 10 | 10 | U | 2.0 | < 8.1 | 8.1 | U | 1.6 | < 7.7 | 7.7 | U | 1.5 | < 11 | 11 | U | 2.3 | < 14 | 14 | U | 2.8 |
| Styrene | ug/Kg | | | | < 5.7 | 5.7 | U | 0.57 | < 4.8 | 4.8 | U | 0.48 | < 10 | 10 | U | 1.0 | < 8.1 | 8.1 | U | 0.81 | < 7.7 | 7.7 | U | 0.77 | < 11 | 11 | U | 1.1 | < 14 | 14 | U | 1.4 |
| Tetrachloroethene | ug/Kg | 5,500 | 19,000 | 1,300 | < 5.7 | 5.7 | U | 1.1 | < 4.8 | 4.8 | U | 0.97 | < 10 | 10 | U | 2.0 | < 8.1 | 8.1 | U | 1.6 | < 7.7 | 7.7 | U | 1.5 | < 11 | 11 | U | 2.3 | < 14 | 14 | U | 2.8 |
| Toluene | ug/Kg | 100,000 | 100,000 | 700 | < 5.7 | 5.7 | U | 0.57 | < 4.8 | 4.8 | U | 0.48 | < 10 | 10 | U | 1.0 | < 8.1 | 8.1 | U | 0.81 | < 7.7 | 7.7 | U | 0.77 | < 11 | 11 | U | 1.1 | < 14 | 14 | U | 1.4 |
| Total Xylenes | ug/Kg | | 100,000 | 260 | < 5.7 | 5.7 | U | 1.1 | < 4.8 | 4.8 | U | 0.97 | < 10 | 10 | U | 2.0 | < 8.1 | 8.1 | U | 1.6 | < 7.7 | 7.7 | U | 1.5 | < 11 | 11 | U | 2.3 | < 14 | 14 | U | 2.8 |
| trans-1,2-Dichloroethene | ug/Kg | 100,000 | 100,000 | 190 | < 5.7 | 5.7 | U | 0.57 | < 4.8 | 4.8 | U | 0.48 | < 10 | 10 | U | 1.0 | < 8.1 | 8.1 | U | 0.81 | < 7.7 | 7.7 | U | 0.77 | < 11 | 11 | U | 1.1 | < 14 | 14 | U | 1.4 |
| trans-1,3-Dichloropropene | ug/Kg | | | | < 5.7 | 5.7 | U | 0.57 | < 4.8 | 4.8 | U | 0.48 | < 10 | 10 | U | 1.0 | < 8.1 | 8.1 | U | 0.81 | < 7.7 | 7.7 | U | 0.77 | < 11 | 11 | U | 1.1 | < 14 | 14 | U | 1.4 |
| Trichloroethene | ug/Kg | 10,000 | 21,000 | 470 | < 5.7 | 5.7 | U | 0.57 | < 4.8 | 4.8 | U | 0.48 | < 10 | 10 | U | 1.0 | < 8.1 | 8.1 | U | 0.81 | < 7.7 | 7.7 | U | 0.77 | < 11 | 11 | U | 1.1 | < 14 | 14 | U | 1.4 |
| Trichlorofluoromethane | ug/Kg | | | | < 5.7 | 5.7 | U | 1.1 | < 4.8 | 4.8 | U | 0.97 | < 10 | 10 | U | 2.0 | < 8.1 | 8.1 | U | 1.6 | < 7.7 | 7.7 | U | 1.5 | < 11 | 11 | U | 2.3 | < 14 | 14 | U | 2.8 |
| Trichlorotrifluoroethane | ug/Kg | | | | < 5.7 | 5.7 | U | 0.57 | < 4.8 | 4.8 | U | 0.48 | < 10 | 10 | U | 1.0 | < 8.1 | 8.1 | U | 0.81 | < 7.7 | 7.7 | U | 0.77 | < 11 | 11 | U | 1.1 | < 14 | 14 | U | 1.4 |

**TABLE 6A**
**SURFACE SOIL LABORATORY ANALYTICAL RESULTS SUMMARY**

**REMEDIAL INVESTIGATION**
**109-125 MARBLEDALE ROAD**
**TUCKAHOE, NEW YORK**
**BCP #C360143**

| Analytes | Lab Sample Id<br>Collection Date<br>Client Id<br>Matrix | Part 375 Soil Cleanup Objectives | | | BJ07743<br>4/23/2015<br>SS-1<br>Soil | | | | BJ07744<br>4/23/2015<br>SS-2<br>Soil | | | | BJ07745<br>4/23/2015<br>SS-3<br>Soil | | | | BJ07746<br>4/23/2015<br>SS-4<br>Soil | | | | BJ07747<br>4/23/2015<br>SS-5<br>Soil | | | | BJ07748<br>4/23/2015<br>SS-6<br>Soil | | | | BJ07749<br>4/23/2015<br>SS-7<br>Soil | | | |
|---|---|---|---|---|---|---|---|---|---|---|---|---|---|---|---|---|---|---|---|---|---|---|---|---|---|---|---|---|---|---|---|---|
| | Units | NY-Res. | NY-ResRestrict | NY-UnRestricted | Result | RL | Qual | MDL | Result | RL | Qual | MDL | Result | RL | Qual | MDL | Result | RL | Qual | MDL | Result | RL | Qual | MDL | Result | RL | Qual | MDL | Result | RL | Qual | MDL |
| Vinyl chloride | ug/Kg | 210 | 900 | 20 | < 5.7 | 5.7 | U | 0.57 | < 4.8 | 4.8 | U | 0.48 | < 10 | 10 | U | 1.0 | < 8.1 | 8.1 | U | 0.81 | < 7.7 | 7.7 | U | 0.77 | < 11 | 11 | U | 1.1 | < 14 | 14 | U | 1.4 |
| **Semivolatiles By SW8270D** | | | | | | | | | | | | | | | | | | | | | | | | | | | | | | | | |
| 1,1-Biphenyl | ug/Kg | | | | < 280 | 280 | U | 120 | < 250 | 250 | U | 110 | < 330 | 330 | U | 140 | < 280 | 280 | U | 120 | < 270 | 270 | U | 120 | < 320 | 320 | U | 140 | < 290 | 290 | U | 130 |
| 1,2,4,5-Tetrachlorobenzene | ug/Kg | | | | < 280 | 280 | U | 140 | < 250 | 250 | U | 130 | < 330 | 330 | U | 170 | < 280 | 280 | U | 140 | < 270 | 270 | U | 140 | < 320 | 320 | U | 160 | < 290 | 290 | U | 150 |
| 2,3,4,6-tetrachlorophenol | ug/Kg | | | | < 280 | 280 | U | 190 | < 250 | 250 | U | 170 | < 330 | 330 | U | 220 | < 280 | 280 | U | 190 | < 270 | 270 | U | 180 | < 320 | 320 | U | 220 | < 290 | 290 | U | 190 |
| 2,4,5-Trichlorophenol | ug/Kg | | | | < 280 | 280 | U | 220 | < 250 | 250 | U | 200 | < 330 | 330 | U | 260 | < 280 | 280 | U | 220 | < 270 | 270 | U | 210 | < 320 | 320 | U | 250 | < 290 | 290 | U | 230 |
| 2,4,6-Trichlorophenol | ug/Kg | | | | < 160 | 160 | U | 130 | < 140 | 140 | U | 110 | < 190 | 190 | U | 150 | < 160 | 160 | U | 130 | < 160 | 160 | U | 120 | < 180 | 180 | U | 150 | < 170 | 170 | U | 130 |
| 2,4-Dichlorophenol | ug/Kg | | | | < 160 | 160 | U | 140 | < 140 | 140 | U | 130 | < 190 | 190 | U | 170 | < 160 | 160 | U | 140 | < 160 | 160 | U | 140 | < 180 | 180 | U | 160 | < 170 | 170 | U | 150 |
| 2,4-Dimethylphenol | ug/Kg | | | | < 280 | 280 | U | 100 | < 250 | 250 | U | 89 | < 330 | 330 | U | 120 | < 280 | 280 | U | 99 | < 270 | 270 | U | 96 | < 320 | 320 | U | 110 | < 290 | 290 | U | 100 |
| 2,4-Dinitrophenol | ug/Kg | | | | < 280 | 280 | U | 280 | < 250 | 250 | U | 250 | < 330 | 330 | U | 330 | < 280 | 280 | U | 280 | < 270 | 270 | U | 270 | < 320 | 320 | U | 320 | < 290 | 290 | U | 290 |
| 2,4-Dinitrotoluene | ug/Kg | | | | < 160 | 160 | U | 160 | < 140 | 140 | U | 140 | < 190 | 190 | U | 190 | < 160 | 160 | U | 160 | < 160 | 160 | U | 150 | < 180 | 180 | U | 180 | < 170 | 170 | U | 160 |
| 2,6-Dinitrotoluene | ug/Kg | | | | < 160 | 160 | U | 130 | < 140 | 140 | U | 110 | < 190 | 190 | U | 150 | < 160 | 160 | U | 130 | < 160 | 160 | U | 120 | < 180 | 180 | U | 150 | < 170 | 170 | U | 130 |
| 2-Chloronaphthalene | ug/Kg | | | | < 280 | 280 | U | 110 | < 250 | 250 | U | 100 | < 330 | 330 | U | 130 | < 280 | 280 | U | 110 | < 270 | 270 | U | 110 | < 320 | 320 | U | 130 | < 290 | 290 | U | 120 |
| 2-Chlorophenol | ug/Kg | | | | < 280 | 280 | U | 110 | < 250 | 250 | U | 100 | < 330 | 330 | U | 130 | < 280 | 280 | U | 110 | < 270 | 270 | U | 110 | < 320 | 320 | U | 130 | < 290 | 290 | U | 120 |
| 2-Methylnaphthalene | ug/Kg | | | | < 280 | 280 | U | 120 | < 250 | 250 | U | 110 | < 330 | 330 | U | 140 | < 280 | 280 | U | 120 | < 270 | 270 | U | 120 | < 320 | 320 | U | 140 | < 290 | 290 | U | 120 |
| 2-Methylphenol (o-cresol) | ug/Kg | 100,000 | 100,000 | 330 | < 280 | 280 | U | 190 | < 250 | 250 | U | 170 | < 330 | 330 | U | 220 | < 280 | 280 | U | 190 | < 270 | 270 | U | 180 | < 320 | 320 | U | 220 | < 290 | 290 | U | 200 |
| 2-Nitroaniline | ug/Kg | | | | < 2000 | 2,000 | U | 410 | < 1800 | 1,800 | U | 360 | < 2400 | 2,400 | U | 480 | < 2000 | 2,000 | U | 400 | < 1900 | 1,900 | U | 390 | < 2300 | 2,300 | U | 460 | < 2100 | 2,100 | U | 420 |
| 2-Nitrophenol | ug/Kg | | | | < 280 | 280 | U | 260 | < 250 | 250 | U | 230 | < 330 | 330 | U | 300 | < 280 | 280 | U | 250 | < 270 | 270 | U | 250 | < 320 | 320 | U | 290 | < 290 | 290 | U | 260 |
| 3&4-Methylphenol (m&p-cresol) | ug/Kg | | | | < 280 | 280 | U | 160 | < 250 | 250 | U | 140 | < 330 | 330 | U | 190 | < 280 | 280 | U | 160 | < 270 | 270 | U | 150 | < 320 | 320 | U | 180 | < 290 | 290 | U | 160 |
| 3,3'-Dichlorobenzidine | ug/Kg | | | | < 160 | 160 | U | 160 | < 140 | 140 | U | 140 | < 190 | 190 | U | 190 | < 160 | 160 | U | 160 | < 160 | 160 | U | 160 | < 180 | 180 | U | 180 | < 170 | 170 | U | 170 |
| 3-Nitroaniline | ug/Kg | | | | < 2000 | 2,000 | U | 880 | < 1800 | 1,800 | U | 780 | < 2400 | 2,400 | U | 1000 | < 2000 | 2,000 | U | 870 | < 1900 | 1,900 | U | 840 | < 2300 | 2,300 | U | 1000 | < 2100 | 2,100 | U | 900 |
| 4,6-Dinitro-2-methylphenol | ug/Kg | | | | < 280 | 280 | U | 280 | < 250 | 250 | U | 250 | < 330 | 330 | U | 330 | < 280 | 280 | U | 280 | < 270 | 270 | U | 270 | < 320 | 320 | U | 320 | < 290 | 290 | U | 290 |
| 4-Bromophenyl phenyl ether | ug/Kg | | | | < 280 | 280 | U | 120 | < 250 | 250 | U | 110 | < 330 | 330 | U | 140 | < 280 | 280 | U | 120 | < 270 | 270 | U | 110 | < 320 | 320 | U | 140 | < 290 | 290 | U | 120 |
| 4-Chloro-3-methylphenol | ug/Kg | | | | < 280 | 280 | U | 140 | < 250 | 250 | U | 130 | < 330 | 330 | U | 170 | < 280 | 280 | U | 140 | < 270 | 270 | U | 140 | < 320 | 320 | U | 160 | < 290 | 290 | U | 150 |
| 4-Chloroaniline | ug/Kg | | | | < 810 | 810 | U | 190 | < 720 | 720 | U | 170 | < 940 | 940 | U | 220 | < 800 | 800 | U | 190 | < 780 | 780 | U | 180 | < 920 | 920 | U | 210 | < 830 | 830 | U | 190 |
| 4-Chlorophenyl phenyl ether | ug/Kg | | | | < 280 | 280 | U | 140 | < 250 | 250 | U | 120 | < 330 | 330 | U | 160 | < 280 | 280 | U | 130 | < 270 | 270 | U | 130 | < 320 | 320 | U | 150 | < 290 | 290 | U | 140 |
| 4-Nitroaniline | ug/Kg | | | | < 2000 | 2,000 | U | 130 | < 1800 | 1,800 | U | 120 | < 2400 | 2,400 | U | 160 | < 2000 | 2,000 | U | 130 | < 1900 | 1,900 | U | 130 | < 2300 | 2,300 | U | 150 | < 2100 | 2,100 | U | 140 |
| 4-Nitrophenol | ug/Kg | | | | < 280 | 280 | U | 180 | < 250 | 250 | U | 160 | < 330 | 330 | U | 210 | < 280 | 280 | U | 180 | < 270 | 270 | U | 180 | < 320 | 320 | U | 210 | < 290 | 290 | U | 190 |
| Acenaphthene | ug/Kg | 100,000 | 100,000 | 20,000 | < 280 | 280 | U | 120 | < 250 | 250 | U | 110 | < 330 | 330 | U | 140 | < 280 | 280 | U | 120 | < 270 | 270 | U | 120 | < 320 | 320 | U | 140 | < 290 | 290 | U | 130 |
| Acenaphthylene | ug/Kg | 100,000 | 100,000 | 100,000 | < 160 | 160 | U | 110 | 210 | 140 | | 100 | < 190 | 190 | U | 130 | < 160 | 160 | U | 110 | < 160 | 160 | U | 110 | 140 | 180 | J | 130 | < 170 | 170 | U | 120 |
| Acetophenone | ug/Kg | | | | < 280 | 280 | U | 130 | < 250 | 250 | U | 110 | < 330 | 330 | U | 150 | < 280 | 280 | U | 120 | < 270 | 270 | U | 120 | < 320 | 320 | U | 140 | < 290 | 290 | U | 130 |
| Anthracene | ug/Kg | 100,000 | 100,000 | 100,000 | < 280 | 280 | U | 130 | 230 | 250 | J | 120 | < 330 | 330 | U | 150 | < 280 | 280 | U | 130 | 170 | 270 | J | 130 | 190 | 320 | J | 150 | 140 | 290 | J | 140 |
| Atrazine | ug/Kg | | | | < 160 | 160 | U | 160 | < 140 | 140 | U | 140 | < 190 | 190 | U | 190 | < 160 | 160 | U | 160 | < 160 | 160 | U | 160 | < 180 | 180 | U | 180 | < 170 | 170 | U | 170 |
| Benz(a)anthracene | ug/Kg | 1,000 | 1,000 | 1,000 | 180 | 280 | J | 140 | 840 | 250 | | 120 | 520 | 330 | | 160 | 170 | 280 | J | 130 | 570 | 270 | | 130 | 820 | 320 | | 150 | 540 | 290 | | 140 |
| Benzaldehyde | ug/Kg | | | | < 280 | 280 | U | 120 | < 250 | 250 | U | 110 | < 330 | 330 | U | 140 | < 280 | 280 | U | 120 | < 270 | 270 | U | 110 | < 320 | 320 | U | 140 | < 290 | 290 | U | 120 |
| Benzo(a)pyrene | ug/Kg | 1,000 | 1,000 | 1,000 | 260 | 160 | | 130 | 910 | 140 | | 120 | 540 | 190 | | 150 | 240 | 160 | | 130 | 570 | 160 | | 130 | 930 | 180 | | 150 | 620 | 170 | | 140 |
| Benzo(b)fluoranthene | ug/Kg | 1,000 | 1,000 | 1,000 | 370 | 280 | | 140 | 1,500 | 250 | | 120 | 870 | 330 | | 160 | 340 | 280 | | 140 | 960 | 270 | | 130 | 1,600 | 320 | | 160 | 1,100 | 290 | | 140 |
| Benzo(ghi)perylene | ug/Kg | 100,000 | 100,000 | 100,000 | 170 | 280 | J | 130 | 410 | 250 | | 120 | 240 | 330 | J | 150 | 160 | 280 | J | 130 | 240 | 270 | J | 130 | 440 | 320 | | 150 | 340 | 290 | | 130 |
| Benzo(k)fluoranthene | ug/Kg | 1,000 | 3,900 | 800 | < 280 | 280 | U | 130 | 490 | 250 | | 120 | 330 | 330 | | 160 | 140 | 280 | J | 130 | 330 | 270 | | 130 | 540 | 320 | | 150 | 320 | 290 | | 140 |
| Benzyl butyl phthalate | ug/Kg | | | | < 280 | 280 | U | 100 | < 250 | 250 | U | 93 | < 330 | 330 | U | 120 | < 280 | 280 | U | 100 | < 270 | 270 | U | 100 | < 320 | 320 | U | 120 | < 290 | 290 | U | 110 |
| Bis(2-chloroethoxy)methane | ug/Kg | | | | < 280 | 280 | U | 110 | < 250 | 250 | U | 99 | < 330 | 330 | U | 130 | < 280 | 280 | U | 110 | < 270 | 270 | U | 110 | < 320 | 320 | U | 130 | < 290 | 290 | U | 110 |
| Bis(2-chloroethyl)ether | ug/Kg | | | | < 160 | 160 | U | 110 | < 140 | 140 | U | 97 | < 190 | 190 | U | 130 | < 160 | 160 | U | 110 | < 160 | 160 | U | 100 | < 180 | 180 | U | 120 | < 170 | 170 | U | 110 |
| Bis(2-chloroisopropyl)ether | ug/Kg | | | | < 280 | 280 | U | 110 | < 250 | 250 | U | 100 | < 330 | 330 | U | 130 | < 280 | 280 | U | 110 | < 270 | 270 | U | 110 | < 320 | 320 | U | 130 | < 290 | 290 | U | 120 |
| Bis(2-ethylhexyl)phthalate | ug/Kg | | | | < 280 | 280 | U | 120 | < 250 | 250 | U | 100 | < 330 | 330 | U | 140 | < 280 | 280 | U | 110 | < 270 | 270 | U | 110 | < 320 | 320 | U | 130 | < 290 | 290 | U | 120 |
| Caprolactam | ug/Kg | | | | < 280 | 280 | U | 280 | < 250 | 250 | U | 250 | < 330 | 330 | U | 330 | < 280 | 280 | U | 280 | < 270 | 270 | U | 270 | < 320 | 320 | U | 320 | < 290 | 290 | U | 290 |
| Carbazole | ug/Kg | | | | < 2000 | 2,000 | U | 310 | < 1800 | 1,800 | U | 270 | < 2400 | 2,400 | U | 360 | < 2000 | 2,000 | U | 300 | < 1900 | 1,900 | U | 290 | < 2300 | 2,300 | U | 350 | < 2100 | 2,100 | U | 320 |
| Chrysene | ug/Kg | 1,000 | 3,900 | 1,000 | 210 | 280 | J | 140 | 890 | 250 | | 120 | 520 | 330 | | 160 | 190 | 280 | J | 130 | 640 | 270 | | 130 | 920 | 320 | | 150 | 630 | 290 | | 140 |
| Dibenz(a,h)anthracene | ug/Kg | 330 | 330 | 330 | < 160 | 160 | U | 130 | 130 | 140 | J | 120 | < 190 | 190 | U | 150 | < 160 | 160 | U | 130 | < 160 | 160 | U | 130 | < 180 | 180 | U | 150 | < 170 | 170 | U | 130 |
| Dibenzofuran | ug/Kg | | | 7,000 | < 280 | 280 | U | 120 | < 250 | 250 | U | 100 | < 330 | 330 | U | 140 | < 280 | 280 | U | 120 | < 270 | 270 | U | 110 | < 320 | 320 | U | 130 | < 290 | 290 | U | 120 |
| Diethyl phthalate | ug/Kg | | | | < 280 | 280 | U | 130 | < 250 | 250 | U | 110 | < 330 | 330 | U | 150 | < 280 | 280 | U | 130 | < 270 | 270 | U | 120 | < 320 | 320 | U | 150 | < 290 | 290 | U | 130 |
| Dimethylphthalate | ug/Kg | | | | < 280 | 280 | U | 130 | < 250 | 250 | U | 110 | < 330 | 330 | U | 150 | < 280 | 280 | U | 120 | < 270 | 270 | U | 120 | < 320 | 320 | U | 140 | < 290 | 290 | U | 130 |

**TABLE 6A**
**SURFACE SOIL LABORATORY ANALYTICAL RESULTS SUMMARY**

**REMEDIAL INVESTIGATION**
**109-125 MARBLEDALE ROAD**
**TUCKAHOE, NEW YORK**
**BCP #C360143**

| Analytes | Lab Sample Id<br>Collection Date<br>Client Id<br>Matrix | Part 375 Soil Cleanup Objectives | | | BJ07743<br>4/23/2015<br>SS-1<br>Soil | | | | BJ07744<br>4/23/2015<br>SS-2<br>Soil | | | | BJ07745<br>4/23/2015<br>SS-3<br>Soil | | | | BJ07746<br>4/23/2015<br>SS-4<br>Soil | | | | BJ07747<br>4/23/2015<br>SS-5<br>Soil | | | | BJ07748<br>4/23/2015<br>SS-6<br>Soil | | | | BJ07749<br>4/23/2015<br>SS-7<br>Soil | | | |
|---|---|---|---|---|---|---|---|---|---|---|---|---|---|---|---|---|---|---|---|---|---|---|---|---|---|---|---|---|---|---|---|---|
| | Units | NY-Res. | NY-ResRestrict | NY-UnRestricted | Result | RL | Qual | MDL | Result | RL | Qual | MDL | Result | RL | Qual | MDL | Result | RL | Qual | MDL | Result | RL | Qual | MDL | Result | RL | Qual | MDL | Result | RL | Qual | MDL |
| Di-n-butylphthalate | ug/Kg | | | | < 280 | 280 | U | 110 | < 250 | 250 | U | 95 | < 330 | 330 | U | 130 | < 280 | 280 | U | 110 | < 270 | 270 | U | 100 | < 320 | 320 | U | 120 | < 290 | 290 | U | 110 |
| Di-n-octylphthalate | ug/Kg | | | | < 280 | 280 | U | 100 | < 250 | 250 | U | 93 | < 330 | 330 | U | 120 | < 280 | 280 | U | 100 | < 270 | 270 | U | 100 | < 320 | 320 | U | 120 | < 290 | 290 | U | 110 |
| Fluoranthene | ug/Kg | 100,000 | 100,000 | 100,000 | 180 | 280 | J | 130 | 850 | 250 | | 120 | 490 | 330 | | 150 | 140 | 280 | J | 130 | 820 | 270 | | 130 | 970 | 320 | | 150 | 650 | 290 | | 130 |
| Fluorene | ug/Kg | 100,000 | 100,000 | 30,000 | < 280 | 280 | U | 130 | < 250 | 250 | U | 120 | < 330 | 330 | U | 160 | < 280 | 280 | U | 130 | < 270 | 270 | U | 130 | < 320 | 320 | U | 150 | < 290 | 290 | U | 140 |
| Hexachlorobenzene | ug/Kg | | | | < 160 | 160 | U | 120 | < 140 | 140 | U | 100 | < 190 | 190 | U | 140 | < 160 | 160 | U | 120 | < 160 | 160 | U | 110 | < 180 | 180 | U | 130 | < 170 | 170 | U | 120 |
| Hexachlorobutadiene | ug/Kg | | | | < 280 | 280 | U | 150 | < 250 | 250 | U | 130 | < 330 | 330 | U | 170 | < 280 | 280 | U | 140 | < 270 | 270 | U | 140 | < 320 | 320 | U | 170 | < 290 | 290 | U | 150 |
| Hexachlorocyclopentadiene | ug/Kg | | | | < 280 | 280 | U | 120 | < 250 | 250 | U | 110 | < 330 | 330 | U | 140 | < 280 | 280 | U | 120 | < 270 | 270 | U | 120 | < 320 | 320 | U | 140 | < 290 | 290 | U | 130 |
| Hexachloroethane | ug/Kg | | | | < 160 | 160 | U | 120 | < 140 | 140 | U | 110 | < 190 | 190 | U | 140 | < 160 | 160 | U | 120 | < 160 | 160 | U | 120 | < 180 | 180 | U | 140 | < 170 | 170 | U | 120 |
| Indeno(1,2,3-cd)pyrene | ug/Kg | 500 | 500 | 500 | 150 | 280 | J | 130 | 370 | 250 | | 120 | 220 | 330 | J | 160 | 130 | 280 | J | 130 | 230 | 270 | J | 130 | 400 | 320 | | 150 | 300 | 290 | | 140 |
| Isophorone | ug/Kg | | | | < 160 | 160 | U | 110 | < 140 | 140 | U | 100 | < 190 | 190 | U | 130 | < 160 | 160 | U | 110 | < 160 | 160 | U | 110 | < 180 | 180 | U | 130 | < 170 | 170 | U | 120 |
| Naphthalene | ug/Kg | 100,000 | 100,000 | 12,000 | < 280 | 280 | U | 120 | < 250 | 250 | U | 100 | < 330 | 330 | U | 140 | < 280 | 280 | U | 110 | < 270 | 270 | U | 110 | < 320 | 320 | U | 130 | < 290 | 290 | U | 120 |
| Nitrobenzene | ug/Kg | | | | < 160 | 160 | U | 140 | < 140 | 140 | U | 130 | < 190 | 190 | U | 160 | < 160 | 160 | U | 140 | < 160 | 160 | U | 140 | < 180 | 180 | U | 160 | < 170 | 170 | U | 150 |
| N-Nitrosodimethylamine | ug/Kg | | | | < 280 | 280 | U | 110 | < 250 | 250 | U | 100 | < 330 | 330 | U | 130 | < 280 | 280 | U | 110 | < 270 | 270 | U | 110 | < 320 | 320 | U | 130 | < 290 | 290 | U | 120 |
| N-Nitrosodi-n-propylamine | ug/Kg | | | | < 160 | 160 | U | 130 | < 140 | 140 | U | 120 | < 190 | 190 | U | 150 | < 160 | 160 | U | 130 | < 160 | 160 | U | 130 | < 180 | 180 | U | 150 | < 170 | 170 | U | 130 |
| N-Nitrosodiphenylamine | ug/Kg | | | | < 160 | 160 | U | 160 | < 140 | 140 | U | 140 | < 190 | 190 | U | 180 | < 160 | 160 | U | 150 | < 160 | 160 | U | 150 | < 180 | 180 | U | 180 | < 170 | 170 | U | 160 |
| Pentachlorophenol | ug/Kg | 2,400 | 6,700 | 800 | < 280 | 280 | U | 150 | < 250 | 250 | U | 140 | < 330 | 330 | U | 180 | < 280 | 280 | U | 150 | < 270 | 270 | U | 150 | < 320 | 320 | U | 170 | < 290 | 290 | U | 160 |
| Phenanthrene | ug/Kg | 100,000 | 100,000 | 100,000 | 140 | 160 | J | 120 | 550 | 140 | | 100 | 230 | 190 | | 130 | < 160 | 160 | U | 110 | 850 | 160 | | 110 | 740 | 180 | | 130 | 390 | 170 | | 120 |
| Phenol | ug/Kg | 100,000 | 100,000 | 330 | < 280 | 280 | U | 130 | < 250 | 250 | U | 110 | < 330 | 330 | U | 150 | < 280 | 280 | U | 130 | < 270 | 270 | U | 120 | < 320 | 320 | U | 150 | < 290 | 290 | U | 130 |
| Pyrene | ug/Kg | 100,000 | 100,000 | 100,000 | 160 | 280 | J | 140 | 780 | 250 | | 120 | 420 | 330 | | 160 | < 280 | 280 | U | 140 | 660 | 270 | | 130 | 840 | 320 | | 160 | 600 | 290 | | 140 |
| **1,4-dioxane By SW8260C** | | | | | | | | | | | | | | | | | | | | | | | | | | | | | | | | |
| 1,4-dioxane | ug/kg | 9,800 | 13,000 | 100 | < 100 | 100 | U | 45 | < 97 | 97 | U | 39 | < 100 | 100 | U | 81 | < 100 | 100 | U | 65 | < 100 | 100 | U | 62 | < 100 | 100 | U | 91 | < 100 | 100 | U | 100 |
| **Miscellaneous/Inorganics** | | | | | | | | | | | | | | | | | | | | | | | | | | | | | | | | |
| Total Cyanide (SW9010C Distillation) | mg/Kg | | | | 0.433 | 0.62 | B | 0.31 | < 0.55 | 0.55 | U | 0.27 | 0.649 | 0.71 | B | 0.36 | < 0.55 | 0.55 | U | 0.27 | < 0.59 | 0.59 | U | 0.29 | 0.491 | 0.69 | B | 0.35 | 0.481 | 0.64 | B | 0.32 |
| **PCBs By SW8082A** | | | | | | | | | | | | | | | | | | | | | | | | | | | | | | | | |
| PCB-1016 | ug/Kg | 1,000 | | 100 | < 41 | 41 | U | 41 | < 36 | 36 | U | 36 | < 48 | 48 | U | 48 | < 40 | 40 | U | 40 | < 39 | 39 | U | 39 | < 45 | 45 | U | 45 | < 42 | 42 | U | 42 |
| PCB-1221 | ug/Kg | 1,000 | | 100 | < 41 | 41 | U | 41 | < 36 | 36 | U | 36 | < 48 | 48 | U | 48 | < 40 | 40 | U | 40 | < 39 | 39 | U | 39 | < 45 | 45 | U | 45 | < 42 | 42 | U | 42 |
| PCB-1232 | ug/Kg | 1,000 | | 100 | < 41 | 41 | U | 41 | < 36 | 36 | U | 36 | < 48 | 48 | U | 48 | < 40 | 40 | U | 40 | < 39 | 39 | U | 39 | < 45 | 45 | U | 45 | < 42 | 42 | U | 42 |
| PCB-1242 | ug/Kg | 1,000 | | 100 | < 41 | 41 | U | 41 | < 36 | 36 | U | 36 | < 48 | 48 | U | 48 | < 40 | 40 | U | 40 | < 39 | 39 | U | 39 | < 45 | 45 | U | 45 | < 42 | 42 | U | 42 |
| PCB-1248 | ug/Kg | 1,000 | | 100 | < 41 | 41 | U | 41 | < 36 | 36 | U | 36 | < 48 | 48 | U | 48 | < 40 | 40 | U | 40 | < 39 | 39 | U | 39 | < 45 | 45 | U | 45 | < 42 | 42 | U | 42 |
| PCB-1254 | ug/Kg | 1,000 | | 100 | < 41 | 41 | U | 41 | < 36 | 36 | U | 36 | < 48 | 48 | U | 48 | < 40 | 40 | U | 40 | < 39 | 39 | U | 39 | < 45 | 45 | U | 45 | < 42 | 42 | U | 42 |
| PCB-1260 | ug/Kg | 1,000 | | 100 | < 41 | 41 | U | 41 | < 36 | 36 | U | 36 | 56 | 48 | | 48 | < 40 | 40 | U | 40 | < 39 | 39 | U | 39 | 71 | 45 | | 45 | < 42 | 42 | U | 42 |
| PCB-1262 | ug/Kg | | | | < 41 | 41 | U | 41 | < 36 | 36 | U | 36 | < 48 | 48 | U | 48 | < 40 | 40 | U | 40 | < 39 | 39 | U | 39 | < 45 | 45 | U | 45 | < 42 | 42 | U | 42 |
| PCB-1268 | ug/Kg | | | | < 41 | 41 | U | 41 | < 36 | 36 | U | 36 | < 48 | 48 | U | 48 | < 40 | 40 | U | 40 | < 39 | 39 | U | 39 | < 45 | 45 | U | 45 | < 42 | 42 | U | 42 |
| **Metals, Total** | | | | | | | | | | | | | | | | | | | | | | | | | | | | | | | | |
| Aluminum | mg/Kg | | | | 10,100 | 39 | | 7.7 | 12,500 | 36 | | 7.2 | 13,700 | 48 | | 9.7 | 4,780 | 38 | * | 7.6 | 7,020 | 39 | * | 7.7 | 10,500 | 41 | | 8.2 | 5,470 | 42 | | 8.4 |
| Antimony | mg/Kg | | | | < 1.9 | 1.9 | U | 1.9 | < 1.8 | 1.8 | U | 1.8 | < 2.4 | 2.4 | U | 2.4 | < 1.9 | 1.9 | U | 1.9 | < 1.9 | 1.9 | U | 1.9 | < 2.0 | 2.0 | U | 2.0 | < 2.1 | 2.1 | U | 2.1 |
| Arsenic | mg/Kg | 16 | 16 | 13 | 2.4 | 0.8 | * | 0.77 | 4.5 | 0.7 | * | 0.72 | 2.5 | 1.0 | * | 0.97 | 2 | 0.8 | | 0.76 | 1.2 | 0.8 | | 0.77 | 1.8 | 0.8 | * | 0.82 | 2.1 | 0.8 | * | 0.84 |
| Barium | mg/Kg | 350 | 400 | 350 | 65.7 | 0.8 | | 0.39 | 122 | 0.7 | | 0.36 | 104 | 1.0 | | 0.48 | 49.4 | 0.8 | * | 0.38 | 38.6 | 0.8 | * | 0.39 | 76.5 | 0.8 | | 0.41 | 51.4 | 0.8 | | 0.42 |
| Beryllium | mg/Kg | 14 | 72 | 7.2 | 0.34 | 0.31 | | 0.15 | 0.49 | 0.29 | | 0.14 | 0.45 | 0.39 | | 0.19 | 0.24 | 0.30 | B* | 0.15 | 0.25 | 0.31 | B* | 0.15 | 0.35 | 0.33 | | 0.16 | 0.2 | 0.34 | B | 0.17 |
| Cadmium | mg/Kg | 2.5 | 4.3 | 2.5 | < 0.39 | 0.39 | U | 0.15 | 0.22 | 0.36 | B | 0.14 | 0.42 | 0.48 | B | 0.19 | < 0.38 | 0.38 | U | 0.15 | < 0.39 | 0.39 | U | 0.15 | < 0.41 | 0.41 | U | 0.16 | < 0.42 | 0.42 | U | 0.17 |
| Calcium | mg/Kg | | | | 10,300 | 39 | | 35 | 38,400 | 36 | | 33 | 10,200 | 48 | | 44 | 71,000 | 38 | | 35 | 25,600 | 39 | | 36 | 10,100 | 41 | | 38 | 51,300 | 42 | | 39 |
| Chromium | mg/Kg | | | 30 | 21.6 | 0.39 | | 0.39 | 24.4 | 0.36 | | 0.36 | 25.5 | 0.48 | | 0.48 | 12.5 | 0.38 | * | 0.38 | 11.9 | 0.39 | * | 0.39 | 27.1 | 0.41 | | 0.41 | 12.3 | 0.42 | | 0.42 |
| Cobalt | mg/Kg | | | | 8.06 | 0.39 | * | 0.39 | 9.75 | 0.36 | * | 0.36 | 12.3 | 0.48 | * | 0.48 | 4.27 | 0.38 | * | 0.38 | 6.52 | 0.39 | * | 0.39 | 8.54 | 0.41 | * | 0.41 | 5.27 | 0.42 | * | 0.42 |
| Copper | mg/Kg | 270 | 270 | 50 | 51.1 | 0.39 | N* | 0.39 | 64.5 | 0.36 | N* | 0.36 | 60.7 | 0.48 | N* | 0.48 | 18 | 3.8 | | 3.8 | 38.2 | 0.39 | | 0.39 | 30.6 | 0.41 | N* | 0.41 | 32.1 | 0.42 | N* | 0.42 |
| Iron | mg/Kg | | | | 17,200 | 39 | * | 39 | 24,200 | 36 | * | 36 | 27,500 | 48 | * | 48 | 8,970 | 3.8 | * | 3.8 | 12,700 | 39 | * | 39 | 17,800 | 41 | * | 41 | 11,600 | 42 | * | 42 |
| Lead | mg/Kg | 400 | 400 | 63 | 39.6 | 0.8 | | 0.39 | 181 | 7.2 | | 3.6 | 105 | 9.7 | | 4.8 | 38.1 | 0.8 | * | 0.38 | 27.5 | 0.8 | * | 0.39 | 69.1 | 0.8 | | 0.41 | 26.9 | 0.8 | | 0.42 |
| Magnesium | mg/Kg | | | | 8,040 | 39 | | 39 | 20,000 | 36 | | 36 | 9,800 | 48 | | 48 | 35,200 | 38 | | 38 | 8,960 | 39 | | 39 | 7,660 | 41 | | 41 | 27,800 | 42 | | 42 |
| Manganese | mg/Kg | 2,000 | 2,000 | 1,600 | 239 | 3.9 | N | 3.9 | 349 | 3.6 | N | 3.6 | 363 | 4.8 | N | 4.8 | 179 | 3.8 | N | 3.8 | 178 | 3.9 | N | 3.9 | 286 | 4.1 | N | 4.1 | 204 | 4.2 | N | 4.2 |

**TABLE 6A**
**SURFACE SOIL LABORATORY ANALYTICAL RESULTS SUMMARY**

**REMEDIAL INVESTIGATION**
**109-125 MARBLEDALE ROAD**
**TUCKAHOE, NEW YORK**
**BCP #C360143**

| Analytes | Lab Sample Id<br>Collection Date<br>Client Id<br>Matrix | Part 375 Soil Cleanup Objectives | | | BJ07743<br>4/23/2015<br>SS-1<br>Soil | | | | BJ07744<br>4/23/2015<br>SS-2<br>Soil | | | | BJ07745<br>4/23/2015<br>SS-3<br>Soil | | | | BJ07746<br>4/23/2015<br>SS-4<br>Soil | | | | BJ07747<br>4/23/2015<br>SS-5<br>Soil | | | | BJ07748<br>4/23/2015<br>SS-6<br>Soil | | | | BJ07749<br>4/23/2015<br>SS-7<br>Soil | | | |
|---|---|---|---|---|---|---|---|---|---|---|---|---|---|---|---|---|---|---|---|---|---|---|---|---|---|---|---|---|---|---|---|---|
| | Units | NY-Res. | NY-ResRestrict | NY-UnRestricted | Result | RL | Qual | MDL | Result | RL | Qual | MDL | Result | RL | Qual | MDL | Result | RL | Qual | MDL | Result | RL | Qual | MDL | Result | RL | Qual | MDL | Result | RL | Qual | MDL |
| Mercury | mg/Kg | 0.81 | 0.81 | 0.18 | 0.06 | 0.03 | N | 0.02 | 0.24 | 0.03 | N | 0.02 | 0.23 | 0.03 | N | 0.02 | 0.03 | 0.03 | N | 0.02 | < 0.03 | 0.03 | UN | 0.02 | 0.1 | 0.03 | N | 0.02 | < 0.03 | 0.03 | UN | 0.02 |
| Nickel | mg/Kg | 140 | 310 | 30 | 15.1 | 0.39 | * | 0.39 | 28.2 | 0.36 | * | 0.36 | 21.5 | 0.48 | * | 0.48 | 9.95 | 0.38 | * | 0.38 | 11.7 | 0.39 | * | 0.39 | 21.9 | 0.41 | * | 0.41 | 11.7 | 0.42 | * | 0.42 |
| Potassium | mg/Kg | | | | 2,640 | 77 | | 30 | 2,350 | 72 | | 28 | 3,570 | 97 | | 38 | 1,690 | 76 | N | 30 | 1,180 | 77 | N | 30 | 2,730 | 82 | | 32 | 1,510 | 84 | | 33 |
| Selenium | mg/Kg | 36 | 180 | 3.9 | < 1.5 | 1.5 | U | 1.3 | < 1.4 | 1.4 | U | 1.2 | < 1.9 | 1.9 | U | 1.6 | < 1.5 | 1.5 | U | 1.3 | < 1.5 | 1.5 | U | 1.3 | < 1.6 | 1.6 | U | 1.4 | < 1.7 | 1.7 | U | 1.4 |
| Silver | mg/Kg | 36 | 180 | 2 | < 0.39 | 0.39 | U | 0.39 | < 0.36 | 0.36 | U | 0.36 | < 0.48 | 0.48 | U | 0.48 | < 0.38 | 0.38 | U | 0.38 | < 0.39 | 0.39 | U | 0.39 | < 0.41 | 0.41 | U | 0.41 | < 0.42 | 0.42 | U | 0.42 |
| Sodium | mg/Kg | | | | 748 | 8 | N | 3.3 | 311 | 7 | N | 3.1 | 192 | 10 | N | 4.2 | 226 | 8 | N | 3.3 | 462 | 8 | N | 3.3 | 153 | 8 | N | 3.5 | 246 | 8 | N | 3.6 |
| Thallium | mg/Kg | | | | < 1.5 | 1.5 | U | 1.5 | < 1.4 | 1.4 | U | 1.4 | < 1.9 | 1.9 | U | 1.9 | < 1.5 | 1.5 | U | 1.5 | < 1.5 | 1.5 | U | 1.5 | < 1.6 | 1.6 | U | 1.6 | < 1.7 | 1.7 | U | 1.7 |
| Vanadium | mg/Kg | | | | 33.5 | 0.4 | N | 0.39 | 42.2 | 0.4 | N | 0.36 | 47.9 | 0.5 | N | 0.48 | 30.2 | 0.4 | * | 0.38 | 27.8 | 0.4 | * | 0.39 | 33.7 | 0.4 | N | 0.41 | 37.2 | 0.4 | N | 0.42 |
| Zinc | mg/Kg | 2,200 | 10,000 | 109 | 66.7 | 0.8 | | 0.39 | 212 | 7.2 | | 3.6 | 161 | 9.7 | | 4.8 | 51.8 | 0.8 | | 0.38 | 38.6 | 0.8 | | 0.39 | 83.4 | 0.8 | | 0.41 | 75 | 0.8 | | 0.42 |

Qualifiers

| | |
|---|---|
| U | The compound was anlayzed for but not detected at or above the MDL.<br>The number immediately preceding the "U" represents the PQL reporting level<br>corrected for percent solids, weight and/or volume calculations, and dilution factors. |
| J | The value is estimated. This flag is used<br>a) on form 1 when the compound is reported above the MDL, but below the PQL, and<br>b) on the Tentatively Identified Compounds (TIC) form for all compounds identified |
| N | The concentration is based on the response fo the nearest internal. This flag<br>is used on the TIC form for all compounds identified. |
| S | This compound is a solvent that is used in the laboratory. Laboratory contamination is<br>suspected if concentration is less than five times the reporting level. |
| D | The reported concentration is the result of a diluted analysis. |
| (*) | See report for comment. |

Result Detected

RL Exceeds Criteria

Result Exceeds Criteria

# TABLE 6B
# SURFACE SOIL LABORATORY ANALYTICAL RESULTS SUMMARY

## REMEDIAL INVESTIGATION
## 109-125 MARBLEDALE ROAD
## TUCKAHOE, NEW YORK
## BCP #C360143

| Analytes | Lab Sample Id<br>Collection Date<br>Client Id<br>Matrix | Part 375 Soil Cleanup Objectives | | | BJ07750<br>4/23/2015<br>SS-8<br>Soil | | | | BJ07751<br>4/23/2015<br>SS-9<br>Soil | | | | BJ07752<br>4/23/2015<br>SS-10<br>Soil | | | | BJ07753<br>4/23/2015<br>SS-EB-8<br>Soil | | | | BJ07754<br>4/23/2015<br>TRIP BLANK LOW<br>Soil | | | | BJ07755<br>4/23/2015<br>SS-107<br>Soil | | | | BJ07756<br>4/23/2015<br>TRIP BLANK HIGH<br>Soil | | | |
|---|---|---|---|---|---|---|---|---|---|---|---|---|---|---|---|---|---|---|---|---|---|---|---|---|---|---|---|---|---|---|---|---|
| | Units | NY-Res. | NY-ResRestrict | NY-UnRestricted | Result | RL | Qual | MDL | Result | RL | Qual | MDL | Result | RL | Qual | MDL | Result | RL | Qual | MDL | Result | RL | Qual | MDL | Result | RL | Qual | MDL | Result | RL | Qual | MDL |
| Volatiles By SW8260C | | | | | | | | | | | | | | | | | | | | | | | | | | | | | | | | |
| 1,1,1-Trichloroethane | ug/Kg | 100,000 | 100,000 | 680 | < 9.1 | 9.1 | U | 0.91 | < 16 | 16 | U | 1.6 | < 9.5 | 9.5 | U | 0.95 | < 7.8 | 7.8 | U | 0.78 | < 5.0 | 5.0 | U | 0.50 | < 8.5 | 8.5 | U | 0.85 | < 250 | 250 | U | 25 |
| 1,1,2,2-Tetrachloroethane | ug/Kg | | | | < 9.1 | 9.1 | U | 1.8 | < 16 | 16 | U | 3.1 | < 9.5 | 9.5 | U | 1.9 | < 7.8 | 7.8 | U | 1.6 | < 5.0 | 5.0 | U | 1.0 | < 8.5 | 8.5 | U | 1.7 | < 250 | 250 | U | 50 |
| 1,1,2-Trichloroethane | ug/Kg | | | | < 9.1 | 9.1 | U | 1.8 | < 16 | 16 | U | 3.1 | < 9.5 | 9.5 | U | 1.9 | < 7.8 | 7.8 | U | 1.6 | < 5.0 | 5.0 | U | 1.0 | < 8.5 | 8.5 | U | 1.7 | < 250 | 250 | U | 50 |
| 1,1-Dichloroethane | ug/Kg | 19,000 | 26,000 | 270 | < 9.1 | 9.1 | U | 1.8 | < 16 | 16 | U | 3.1 | < 9.5 | 9.5 | U | 1.9 | < 7.8 | 7.8 | U | 1.6 | < 5.0 | 5.0 | U | 1.0 | < 8.5 | 8.5 | U | 1.7 | < 250 | 250 | U | 50 |
| 1,1-Dichloroethene | ug/Kg | 100,000 | 100,000 | 330 | < 9.1 | 9.1 | U | 0.91 | < 16 | 16 | U | 1.6 | < 9.5 | 9.5 | U | 0.95 | < 7.8 | 7.8 | U | 0.78 | < 5.0 | 5.0 | U | 0.50 | < 8.5 | 8.5 | U | 0.85 | < 250 | 250 | U | 25 |
| 1,2,3-Trichlorobenzene | ug/Kg | | | | < 9.1 | 9.1 | U | 1.8 | < 16 | 16 | U | 3.1 | < 9.5 | 9.5 | U | 1.9 | < 7.8 | 7.8 | U | 1.6 | < 5.0 | 5.0 | U | 1.0 | < 350 | 350 | U | 70 | < 250 | 250 | U | 50 |
| 1,2,4-Trichlorobenzene | ug/Kg | | | | < 9.1 | 9.1 | U | 1.8 | < 16 | 16 | U | 3.1 | < 9.5 | 9.5 | U | 1.9 | < 7.8 | 7.8 | U | 1.6 | < 5.0 | 5.0 | U | 1.0 | < 350 | 350 | U | 70 | < 250 | 250 | U | 50 |
| 1,2-Dibromo-3-chloropropane | ug/Kg | | | | < 9.1 | 9.1 | U | 1.8 | < 16 | 16 | U | 3.1 | < 9.5 | 9.5 | U | 1.9 | < 7.8 | 7.8 | U | 1.6 | < 5.0 | 5.0 | U | 1.0 | < 350 | 350 | U | 70 | < 250 | 250 | U | 50 |
| 1,2-Dibromoethane | ug/Kg | | | | < 9.1 | 9.1 | U | 0.91 | < 16 | 16 | U | 1.6 | < 9.5 | 9.5 | U | 0.95 | < 7.8 | 7.8 | U | 0.78 | < 5.0 | 5.0 | U | 0.50 | < 8.5 | 8.5 | U | 0.85 | < 250 | 250 | U | 25 |
| 1,2-Dichlorobenzene | ug/Kg | 100,000 | 100,000 | 1,100 | < 9.1 | 9.1 | U | 0.91 | < 16 | 16 | U | 1.6 | < 9.5 | 9.5 | U | 0.95 | < 7.8 | 7.8 | U | 0.78 | < 5.0 | 5.0 | U | 0.50 | < 350 | 350 | U | 35 | < 250 | 250 | U | 25 |
| 1,2-Dichloroethane | ug/Kg | 2,300 | 3,100 | 20 | < 9.1 | 9.1 | U | 0.91 | < 16 | 16 | U | 1.6 | < 9.5 | 9.5 | U | 0.95 | < 7.8 | 7.8 | U | 0.78 | < 5.0 | 5.0 | U | 0.50 | < 8.5 | 8.5 | U | 0.85 | < 250 | 250 | U | 25 |
| 1,2-Dichloropropane | ug/Kg | | | | < 9.1 | 9.1 | U | 1.8 | < 16 | 16 | U | 3.1 | < 9.5 | 9.5 | U | 1.9 | < 7.8 | 7.8 | U | 1.6 | < 5.0 | 5.0 | U | 1.0 | < 8.5 | 8.5 | U | 1.7 | < 250 | 250 | U | 50 |
| 1,3-Dichlorobenzene | ug/Kg | 17,000 | 49,000 | 2,400 | < 9.1 | 9.1 | U | 0.91 | < 16 | 16 | U | 1.6 | < 9.5 | 9.5 | U | 0.95 | < 7.8 | 7.8 | U | 0.78 | < 5.0 | 5.0 | U | 0.50 | < 350 | 350 | U | 35 | < 250 | 250 | U | 25 |
| 1,4-Dichlorobenzene | ug/Kg | 9,800 | 13,000 | 1,800 | < 9.1 | 9.1 | U | 0.91 | < 16 | 16 | U | 1.6 | < 9.5 | 9.5 | U | 0.95 | < 7.8 | 7.8 | U | 0.78 | < 5.0 | 5.0 | U | 0.50 | < 350 | 350 | U | 35 | < 250 | 250 | U | 25 |
| 2-Hexanone | ug/Kg | | | | < 46 | 46 | U | 9.1 | < 78 | 78 | U | 16 | < 47 | 47 | U | 9.5 | < 39 | 39 | U | 7.8 | < 25 | 25 | U | 5.0 | < 42 | 42 | U | 8.5 | < 1300 | 1,300 | U | 250 |
| 4-Methyl-2-pentanone | ug/Kg | | | | < 46 | 46 | U | 9.1 | < 78 | 78 | U | 16 | < 47 | 47 | U | 9.5 | < 39 | 39 | U | 7.8 | < 25 | 25 | U | 5.0 | < 42 | 42 | U | 8.5 | < 1300 | 1,300 | U | 250 |
| Acetone | ug/Kg | 100,000 | 100,000 | 50 | < 50 | 50 | U | 9.1 | < 50 | 50 | U | 16 | < 50 | 50 | U | 9.5 | 11 | 50 | JS | 7.8 | < 50 | 50 | U | 5.0 | < 50 | 50 | U | 8.5 | < 2500 | 2,500 | U | 250 |
| Benzene | ug/Kg | 2,900 | 4,800 | 60 | < 9.1 | 9.1 | U | 0.91 | < 16 | 16 | U | 1.6 | < 9.5 | 9.5 | U | 0.95 | < 7.8 | 7.8 | U | 0.78 | < 5.0 | 5.0 | U | 0.50 | < 8.5 | 8.5 | U | 0.85 | < 250 | 250 | U | 25 |
| Bromochloromethane | ug/Kg | | | | < 9.1 | 9.1 | U | 0.91 | < 16 | 16 | U | 1.6 | < 9.5 | 9.5 | U | 0.95 | < 7.8 | 7.8 | U | 0.78 | < 5.0 | 5.0 | U | 0.50 | < 8.5 | 8.5 | U | 0.85 | < 250 | 250 | U | 25 |
| Bromodichloromethane | ug/Kg | | | | < 9.1 | 9.1 | U | 1.8 | < 16 | 16 | U | 3.1 | < 9.5 | 9.5 | U | 1.9 | < 7.8 | 7.8 | U | 1.6 | < 5.0 | 5.0 | U | 1.0 | < 8.5 | 8.5 | U | 1.7 | < 250 | 250 | U | 50 |
| Bromoform | ug/Kg | | | | < 9.1 | 9.1 | U | 1.8 | < 16 | 16 | U | 3.1 | < 9.5 | 9.5 | U | 1.9 | < 7.8 | 7.8 | U | 1.6 | < 5.0 | 5.0 | U | 1.0 | < 8.5 | 8.5 | U | 1.7 | < 250 | 250 | U | 50 |
| Bromomethane | ug/Kg | | | | < 9.1 | 9.1 | U | 3.7 | < 16 | 16 | U | 6.2 | < 9.5 | 9.5 | U | 3.8 | < 7.8 | 7.8 | U | 3.1 | < 5.0 | 5.0 | U | 2.0 | < 8.5 | 8.5 | U | 3.4 | < 250 | 250 | U | 100 |
| Carbon Disulfide | ug/Kg | | | | < 9.1 | 9.1 | U | 1.8 | < 16 | 16 | U | 3.1 | < 9.5 | 9.5 | U | 1.9 | < 7.8 | 7.8 | U | 1.6 | < 5.0 | 5.0 | U | 1.0 | < 8.5 | 8.5 | U | 1.7 | < 250 | 250 | U | 50 |
| Carbon tetrachloride | ug/Kg | 1,400 | 2,400 | 760 | < 9.1 | 9.1 | U | 1.8 | < 16 | 16 | U | 3.1 | < 9.5 | 9.5 | U | 1.9 | < 7.8 | 7.8 | U | 1.6 | < 5.0 | 5.0 | U | 1.0 | < 8.5 | 8.5 | U | 1.7 | < 250 | 250 | U | 50 |
| Chlorobenzene | ug/Kg | 100,000 | 100,000 | 1,100 | < 9.1 | 9.1 | U | 0.91 | < 16 | 16 | U | 1.6 | < 9.5 | 9.5 | U | 0.95 | < 7.8 | 7.8 | U | 0.78 | < 5.0 | 5.0 | U | 0.50 | < 8.5 | 8.5 | U | 0.85 | < 250 | 250 | U | 25 |
| Chloroethane | ug/Kg | | | | < 9.1 | 9.1 | U | 0.91 | < 16 | 16 | U | 1.6 | < 9.5 | 9.5 | U | 0.95 | < 7.8 | 7.8 | U | 0.78 | < 5.0 | 5.0 | U | 0.50 | < 8.5 | 8.5 | U | 0.85 | < 250 | 250 | U | 25 |
| Chloroform | ug/Kg | 10,000 | 49,000 | 370 | < 9.1 | 9.1 | U | 0.91 | < 16 | 16 | U | 1.6 | < 9.5 | 9.5 | U | 0.95 | < 7.8 | 7.8 | U | 0.78 | < 5.0 | 5.0 | U | 0.50 | < 8.5 | 8.5 | U | 0.85 | < 250 | 250 | U | 25 |
| Chloromethane | ug/Kg | | | | < 9.1 | 9.1 | U | 1.8 | < 16 | 16 | U | 3.1 | < 9.5 | 9.5 | U | 1.9 | < 7.8 | 7.8 | U | 1.6 | < 5.0 | 5.0 | U | 1.0 | < 8.5 | 8.5 | U | 1.7 | < 250 | 250 | U | 50 |
| cis-1,2-Dichloroethene | ug/Kg | 59,000 | 100,000 | 250 | < 9.1 | 9.1 | U | 0.91 | < 16 | 16 | U | 1.6 | < 9.5 | 9.5 | U | 0.95 | < 7.8 | 7.8 | U | 0.78 | < 5.0 | 5.0 | U | 0.50 | < 8.5 | 8.5 | U | 0.85 | < 250 | 250 | U | 25 |
| cis-1,3-Dichloropropene | ug/Kg | | | | < 9.1 | 9.1 | U | 0.91 | < 16 | 16 | U | 1.6 | < 9.5 | 9.5 | U | 0.95 | < 7.8 | 7.8 | U | 0.78 | < 5.0 | 5.0 | U | 0.50 | < 8.5 | 8.5 | U | 0.85 | < 250 | 250 | U | 25 |
| Cyclohexane | ug/Kg | | | | < 9.1 | 9.1 | U | 1.8 | < 16 | 16 | U | 3.1 | < 9.5 | 9.5 | U | 1.9 | < 7.8 | 7.8 | U | 1.6 | < 5.0 | 5.0 | U | 1.0 | < 8.5 | 8.5 | U | 1.7 | < 250 | 250 | U | 50 |
| Dibromochloromethane | ug/Kg | | | | < 9.1 | 9.1 | U | 1.8 | < 16 | 16 | U | 3.1 | < 9.5 | 9.5 | U | 1.9 | < 7.8 | 7.8 | U | 1.6 | < 5.0 | 5.0 | U | 1.0 | < 8.5 | 8.5 | U | 1.7 | < 250 | 250 | U | 50 |
| Dichlorodifluoromethane | ug/Kg | | | | < 9.1 | 9.1 | U | 0.91 | < 16 | 16 | U | 1.6 | < 9.5 | 9.5 | U | 0.95 | < 7.8 | 7.8 | U | 0.78 | < 5.0 | 5.0 | U | 0.50 | < 8.5 | 8.5 | U | 0.85 | < 250 | 250 | U | 25 |
| Ethylbenzene | ug/Kg | 30,000 | 41,000 | 1,000 | < 9.1 | 9.1 | U | 0.91 | < 16 | 16 | U | 1.6 | < 9.5 | 9.5 | U | 0.95 | < 7.8 | 7.8 | U | 0.78 | < 5.0 | 5.0 | U | 0.50 | < 8.5 | 8.5 | U | 0.85 | < 250 | 250 | U | 25 |
| Isopropylbenzene | ug/Kg | | | | < 9.1 | 9.1 | U | 0.91 | < 16 | 16 | U | 1.6 | < 9.5 | 9.5 | U | 0.95 | < 7.8 | 7.8 | U | 0.78 | < 5.0 | 5.0 | U | 0.50 | < 350 | 350 | U | 35 | < 250 | 250 | U | 25 |
| m&p-Xylene | ug/Kg | | | | < 9.1 | 9.1 | U | 1.8 | < 16 | 16 | U | 3.1 | < 9.5 | 9.5 | U | 1.9 | < 7.8 | 7.8 | U | 1.6 | < 5.0 | 5.0 | U | 1.0 | 78 | 350 | J | 70 | < 250 | 250 | U | 50 |
| Methyl ethyl ketone | ug/Kg | 100,000 | 100,000 | 120 | < 55 | 55 | U | 9.1 | < 94 | 94 | U | 16 | < 57 | 57 | U | 9.5 | < 47 | 47 | U | 7.8 | < 30 | 30 | U | 5.0 | < 51 | 51 | U | 8.5 | < 1500 | 1,500 | U | 250 |
| Methyl t-butyl ether (MTBE) | ug/Kg | 62,000 | 100,000 | 930 | < 18 | 18 | U | 1.8 | < 31 | 31 | U | 3.1 | < 19 | 19 | U | 1.9 | < 16 | 16 | U | 1.6 | < 10 | 10 | U | 1.0 | < 17 | 17 | U | 1.7 | < 500 | 500 | U | 50 |
| Methylacetate | ug/Kg | | | | < 9.1 | 9.1 | U | 4.6 | < 16 | 16 | U | 7.8 | < 9.5 | 9.5 | U | 4.7 | < 7.8 | 7.8 | U | 3.9 | < 5.0 | 5.0 | U | 2.5 | < 8.5 | 8.5 | U | 4.2 | < 250 | 250 | U | 130 |
| Methylcyclohexane | ug/Kg | | | | < 9.1 | 9.1 | U | 1.8 | < 16 | 16 | U | 3.1 | < 9.5 | 9.5 | U | 1.9 | < 7.8 | 7.8 | U | 1.6 | < 5.0 | 5.0 | U | 1.0 | < 8.5 | 8.5 | U | 1.7 | < 250 | 250 | U | 50 |
| Methylene chloride | ug/Kg | 51,000 | 100,000 | 50 | < 9.1 | 9.1 | U | 9.1 | < 16 | 16 | U | 16 | < 9.5 | 9.5 | U | 9.5 | < 7.8 | 7.8 | U | 7.8 | < 5.0 | 5.0 | U | 5.0 | < 8.5 | 8.5 | U | 8.5 | < 250 | 250 | U | 250 |
| o-Xylene | ug/Kg | | | | < 9.1 | 9.1 | U | 1.8 | < 16 | 16 | U | 3.1 | < 9.5 | 9.5 | U | 1.9 | < 7.8 | 7.8 | U | 1.6 | < 5.0 | 5.0 | U | 1.0 | < 8.5 | 8.5 | U | 1.7 | < 250 | 250 | U | 50 |
| Styrene | ug/Kg | | | | < 9.1 | 9.1 | U | 0.91 | < 16 | 16 | U | 1.6 | < 9.5 | 9.5 | U | 0.95 | < 7.8 | 7.8 | U | 0.78 | < 5.0 | 5.0 | U | 0.50 | < 8.5 | 8.5 | U | 0.85 | < 250 | 250 | U | 25 |
| Tetrachloroethene | ug/Kg | 5,500 | 19,000 | 1,300 | < 9.1 | 9.1 | U | 1.8 | < 16 | 16 | U | 3.1 | < 9.5 | 9.5 | U | 1.9 | < 7.8 | 7.8 | U | 1.6 | < 5.0 | 5.0 | U | 1.0 | < 8.5 | 8.5 | U | 1.7 | < 250 | 250 | U | 50 |
| Toluene | ug/Kg | 100,000 | 100,000 | 700 | < 9.1 | 9.1 | U | 0.91 | < 16 | 16 | U | 1.6 | < 9.5 | 9.5 | U | 0.95 | < 7.8 | 7.8 | U | 0.78 | < 5.0 | 5.0 | U | 0.50 | < 8.5 | 8.5 | U | 0.85 | < 250 | 250 | U | 25 |
| Total Xylenes | ug/Kg | | 100,000 | 260 | < 9.1 | 9.1 | U | 1.8 | < 16 | 16 | U | 3.1 | < 9.5 | 9.5 | U | 1.9 | < 7.8 | 7.8 | U | 1.6 | < 5.0 | 5.0 | U | 1.0 | < 260 | 260 | U | 70 | < 250 | 250 | U | 50 |
| trans-1,2-Dichloroethene | ug/Kg | 100,000 | 100,000 | 190 | < 9.1 | 9.1 | U | 0.91 | < 16 | 16 | U | 1.6 | < 9.5 | 9.5 | U | 0.95 | < 7.8 | 7.8 | U | 0.78 | < 5.0 | 5.0 | U | 0.50 | < 8.5 | 8.5 | U | 0.85 | < 250 | 250 | U | 25 |
| trans-1,3-Dichloropropene | ug/Kg | | | | < 9.1 | 9.1 | U | 0.91 | < 16 | 16 | U | 1.6 | < 9.5 | 9.5 | U | 0.95 | < 7.8 | 7.8 | U | 0.78 | < 5.0 | 5.0 | U | 0.50 | < 8.5 | 8.5 | U | 0.85 | < 250 | 250 | U | 25 |
| Trichloroethene | ug/Kg | 10,000 | 21,000 | 470 | < 9.1 | 9.1 | U | 0.91 | < 16 | 16 | U | 1.6 | < 9.5 | 9.5 | U | 0.95 | < 7.8 | 7.8 | U | 0.78 | < 5.0 | 5.0 | U | 0.50 | < 8.5 | 8.5 | U | 0.85 | < 250 | 250 | U | 25 |
| Trichlorofluoromethane | ug/Kg | | | | < 9.1 | 9.1 | U | 1.8 | < 16 | 16 | U | 3.1 | < 9.5 | 9.5 | U | 1.9 | < 7.8 | 7.8 | U | 1.6 | < 5.0 | 5.0 | U | 1.0 | < 8.5 | 8.5 | U | 1.7 | < 250 | 250 | U | 50 |
| Trichlorotrifluoroethane | ug/Kg | | | | < 9.1 | 9.1 | U | 0.91 | < 16 | 16 | U | 1.6 | < 9.5 | 9.5 | U | 0.95 | < 7.8 | 7.8 | U | 0.78 | < 5.0 | 5.0 | U | 0.50 | < 8.5 | 8.5 | U | 0.85 | < 250 | 250 | U | 25 |
| Vinyl chloride | ug/Kg | 210 | 900 | 20 | < 9.1 | 9.1 | U | 0.91 | < 16 | 16 | U | 1.6 | < 9.5 | 9.5 | U | 0.95 | < 7.8 | 7.8 | U | 0.78 | < 5.0 | 5.0 | U | 0.50 | < 8.5 | 8.5 | U | 0.85 | < 250 | 250 | U | 25 |

# TABLE 6B
# SURFACE SOIL LABORATORY ANALYTICAL RESULTS SUMMARY

## REMEDIAL INVESTIGATION
## 109-125 MARBLEDALE ROAD
## TUCKAHOE, NEW YORK
## BCP #C360143

| Analytes | Lab Sample Id<br>Collection Date<br>Client Id<br>Matrix | Part 375 Soil Cleanup Objectives | | | BJ07750<br>4/23/2015<br>SS-8<br>Soil | | | | BJ07751<br>4/23/2015<br>SS-9<br>Soil | | | | BJ07752<br>4/23/2015<br>SS-10<br>Soil | | | | BJ07753<br>4/23/2015<br>SS-EB-8<br>Soil | | | | BJ07754<br>4/23/2015<br>TRIP BLANK LOW<br>Soil | | | | BJ07755<br>4/23/2015<br>SS-107<br>Soil | | | | BJ07756<br>4/23/2015<br>TRIP BLANK HIGH<br>Soil | | | |
|---|---|---|---|---|---|---|---|---|---|---|---|---|---|---|---|---|---|---|---|---|---|---|---|---|---|---|---|---|---|---|---|---|
| | Units | NY-Res. | NY-ResRestrict | NY-UnRestricted | Result | RL | Qual | MDL | Result | RL | Qual | MDL | Result | RL | Qual | MDL | Result | RL | Qual | MDL | Result | RL | Qual | MDL | Result | RL | Qual | MDL | Result | RL | Qual | MDL |
| Semivolatiles By SW8270D | | | | | | | | | | | | | | | | | | | | | | | | | | | | | | | | |
| 1,1-Biphenyl | ug/Kg | | | | < 260 | 260 | U | 120 | < 310 | 310 | U | 130 | < 300 | 300 | U | 130 | < 240 | 240 | U | 100 | | | | | < 290 | 290 | U | 120 | | | | |
| 1,2,4,5-Tetrachlorobenzene | ug/Kg | | | | < 260 | 260 | U | 130 | < 310 | 310 | U | 160 | < 300 | 300 | U | 150 | < 240 | 240 | U | 120 | | | | | < 290 | 290 | U | 140 | | | | |
| 2,3,4,6-tetrachlorophenol | ug/Kg | | | | < 260 | 260 | U | 180 | < 310 | 310 | U | 210 | < 300 | 300 | U | 200 | < 240 | 240 | U | 160 | | | | | < 290 | 290 | U | 190 | | | | |
| 2,4,5-Trichlorophenol | ug/Kg | | | | < 260 | 260 | U | 210 | < 310 | 310 | U | 240 | < 300 | 300 | U | 230 | < 240 | 240 | U | 190 | | | | | < 290 | 290 | U | 220 | | | | |
| 2,4,6-Trichlorophenol | ug/Kg | | | | < 150 | 150 | U | 120 | < 180 | 180 | U | 140 | < 170 | 170 | U | 140 | < 140 | 140 | U | 110 | | | | | < 160 | 160 | U | 130 | | | | |
| 2,4-Dichlorophenol | ug/Kg | | | | < 150 | 150 | U | 130 | < 180 | 180 | U | 160 | < 170 | 170 | U | 150 | < 140 | 140 | U | 120 | | | | | < 160 | 160 | U | 140 | | | | |
| 2,4-Dimethylphenol | ug/Kg | | | | < 260 | 260 | U | 94 | < 310 | 310 | U | 110 | < 300 | 300 | U | 100 | < 240 | 240 | U | 85 | | | | | < 290 | 290 | U | 100 | | | | |
| 2,4-Dinitrophenol | ug/Kg | | | | < 260 | 260 | U | 260 | < 310 | 310 | U | 310 | < 300 | 300 | U | 300 | < 240 | 240 | U | 240 | | | | | < 290 | 290 | U | 290 | | | | |
| 2,4-Dinitrotoluene | ug/Kg | | | | < 150 | 150 | U | 150 | < 180 | 180 | U | 170 | < 170 | 170 | U | 170 | < 140 | 140 | U | 130 | | | | | < 160 | 160 | U | 160 | | | | |
| 2,6-Dinitrotoluene | ug/Kg | | | | < 150 | 150 | U | 120 | < 180 | 180 | U | 140 | < 170 | 170 | U | 130 | < 140 | 140 | U | 110 | | | | | < 160 | 160 | U | 130 | | | | |
| 2-Chloronaphthalene | ug/Kg | | | | < 260 | 260 | U | 110 | < 310 | 310 | U | 130 | < 300 | 300 | U | 120 | < 240 | 240 | U | 97 | | | | | < 290 | 290 | U | 120 | | | | |
| 2-Chlorophenol | ug/Kg | | | | < 260 | 260 | U | 110 | < 310 | 310 | U | 130 | < 300 | 300 | U | 120 | < 240 | 240 | U | 97 | | | | | < 290 | 290 | U | 120 | | | | |
| 2-Methylnaphthalene | ug/Kg | | | | < 260 | 260 | U | 110 | < 310 | 310 | U | 130 | < 300 | 300 | U | 130 | < 240 | 240 | U | 100 | | | | | < 290 | 290 | U | 120 | | | | |
| 2-Methylphenol (o-cresol) | ug/Kg | 100,000 | 100,000 | 330 | < 260 | 260 | U | 180 | < 310 | 310 | U | 210 | < 300 | 300 | U | 200 | < 240 | 240 | U | 160 | | | | | < 290 | 290 | U | 190 | | | | |
| 2-Nitroaniline | ug/Kg | | | | < 1900 | 1,900 | U | 380 | < 2200 | 2,200 | U | 450 | < 2100 | 2,100 | U | 430 | < 1700 | 1,700 | U | 350 | | | | | < 2000 | 2,000 | U | 410 | | | | |
| 2-Nitrophenol | ug/Kg | | | | < 260 | 260 | U | 240 | < 310 | 310 | U | 280 | < 300 | 300 | U | 270 | < 240 | 240 | U | 220 | | | | | < 290 | 290 | U | 260 | | | | |
| 3&4-Methylphenol (m&p-cresol) | ug/Kg | | | | < 260 | 260 | U | 150 | < 310 | 310 | U | 170 | < 300 | 300 | U | 170 | < 240 | 240 | U | 130 | | | | | < 290 | 290 | U | 160 | | | | |
| 3,3'-Dichlorobenzidine | ug/Kg | | | | < 150 | 150 | U | 150 | < 180 | 180 | U | 180 | < 170 | 170 | U | 170 | < 140 | 140 | U | 140 | | | | | < 160 | 160 | U | 160 | | | | |
| 3-Nitroaniline | ug/Kg | | | | < 1900 | 1,900 | U | 820 | < 2200 | 2,200 | U | 960 | < 2100 | 2,100 | U | 920 | < 1700 | 1,700 | U | 740 | | | | | < 2000 | 2,000 | U | 890 | | | | |
| 4,6-Dinitro-2-methylphenol | ug/Kg | | | | < 260 | 260 | U | 260 | < 310 | 310 | U | 310 | < 300 | 300 | U | 300 | < 240 | 240 | U | 240 | | | | | < 290 | 290 | U | 290 | | | | |
| 4-Bromophenyl phenyl ether | ug/Kg | | | | < 260 | 260 | U | 110 | < 310 | 310 | U | 130 | < 300 | 300 | U | 120 | < 240 | 240 | U | 100 | | | | | < 290 | 290 | U | 120 | | | | |
| 4-Chloro-3-methylphenol | ug/Kg | | | | < 260 | 260 | U | 130 | < 310 | 310 | U | 160 | < 300 | 300 | U | 150 | < 240 | 240 | U | 120 | | | | | < 290 | 290 | U | 140 | | | | |
| 4-Chloroaniline | ug/Kg | | | | < 750 | 750 | U | 180 | < 880 | 880 | U | 210 | < 850 | 850 | U | 200 | < 680 | 680 | U | 160 | | | | | < 820 | 820 | U | 190 | | | | |
| 4-Chlorophenyl phenyl ether | ug/Kg | | | | < 260 | 260 | U | 130 | < 310 | 310 | U | 150 | < 300 | 300 | U | 140 | < 240 | 240 | U | 110 | | | | | < 290 | 290 | U | 140 | | | | |
| 4-Nitroaniline | ug/Kg | | | | < 1900 | 1,900 | U | 130 | < 2200 | 2,200 | U | 150 | < 2100 | 2,100 | U | 140 | < 1700 | 1,700 | U | 110 | | | | | < 2000 | 2,000 | U | 140 | | | | |
| 4-Nitrophenol | ug/Kg | | | | < 260 | 260 | U | 170 | < 310 | 310 | U | 200 | < 300 | 300 | U | 190 | < 240 | 240 | U | 150 | | | | | < 290 | 290 | U | 180 | | | | |
| Acenaphthene | ug/Kg | 100,000 | 100,000 | 20,000 | < 260 | 260 | U | 110 | < 310 | 310 | U | 130 | < 300 | 300 | U | 130 | < 240 | 240 | U | 100 | | | | | < 290 | 290 | U | 120 | | | | |
| Acenaphthylene | ug/Kg | 100,000 | 100,000 | 100,000 | 130 | 150 | J | 110 | < 180 | 180 | U | 120 | < 170 | 170 | U | 120 | < 140 | 140 | U | 96 | | | | | 130 | 160 | J | 110 | | | | |
| Acetophenone | ug/Kg | | | | < 260 | 260 | U | 120 | < 310 | 310 | U | 140 | < 300 | 300 | U | 130 | < 240 | 240 | U | 110 | | | | | < 290 | 290 | U | 130 | | | | |
| Anthracene | ug/Kg | 100,000 | 100,000 | 100,000 | 320 | 260 | | 120 | < 310 | 310 | U | 140 | < 300 | 300 | U | 140 | < 240 | 240 | U | 110 | | | | | 220 | 290 | J | 130 | | | | |
| Atrazine | ug/Kg | | | | < 150 | 150 | U | 150 | < 180 | 180 | U | 180 | < 170 | 170 | U | 170 | < 140 | 140 | U | 140 | | | | | < 160 | 160 | U | 160 | | | | |
| Benz(a)anthracene | ug/Kg | 1,000 | 1,000 | 1,000 | 1,900 | 260 | | 130 | 390 | 310 | | 150 | < 300 | 300 | U | 140 | < 240 | 240 | U | 110 | | | | | 730 | 290 | | 140 | | | | |
| Benzaldehyde | ug/Kg | | | | < 260 | 260 | U | 110 | < 310 | 310 | U | 130 | < 300 | 300 | U | 130 | < 240 | 240 | U | 100 | | | | | < 290 | 290 | U | 120 | | | | |
| Benzo(a)pyrene | ug/Kg | 1,000 | 1,000 | 1,000 | 1,900 | 150 | | 120 | 440 | 180 | | 140 | < 170 | 170 | U | 140 | < 140 | 140 | U | 110 | | | | | 780 | 160 | | 130 | | | | |
| Benzo(b)fluoranthene | ug/Kg | 1,000 | 1,000 | 1,000 | 2,900 | 260 | | 130 | 730 | 310 | | 150 | < 300 | 300 | U | 140 | < 240 | 240 | U | 120 | | | | | 1,300 | 290 | | 140 | | | | |
| Benzo(ghi)perylene | ug/Kg | 100,000 | 100,000 | 100,000 | 540 | 260 | | 120 | 230 | 310 | J | 140 | < 300 | 300 | U | 140 | < 240 | 240 | U | 110 | | | | | 400 | 290 | | 130 | | | | |
| Benzo(k)fluoranthene | ug/Kg | 1,000 | 3,900 | 800 | 990 | 260 | | 130 | 220 | 310 | J | 150 | < 300 | 300 | U | 140 | < 240 | 240 | U | 110 | | | | | 400 | 290 | | 140 | | | | |
| Benzyl butyl phthalate | ug/Kg | | | | < 260 | 260 | U | 97 | < 310 | 310 | U | 110 | < 300 | 300 | U | 110 | < 240 | 240 | U | 88 | | | | | < 290 | 290 | U | 110 | | | | |
| Bis(2-chloroethoxy)methane | ug/Kg | | | | < 260 | 260 | U | 100 | < 310 | 310 | U | 120 | < 300 | 300 | U | 120 | < 240 | 240 | U | 94 | | | | | < 290 | 290 | U | 110 | | | | |
| Bis(2-chloroethyl)ether | ug/Kg | | | | < 150 | 150 | U | 100 | < 180 | 180 | U | 120 | < 170 | 170 | U | 110 | < 140 | 140 | U | 92 | | | | | < 160 | 160 | U | 110 | | | | |
| Bis(2-chloroisopropyl)ether | ug/Kg | | | | < 260 | 260 | U | 100 | < 310 | 310 | U | 120 | < 300 | 300 | U | 120 | < 240 | 240 | U | 95 | | | | | < 290 | 290 | U | 110 | | | | |
| Bis(2-ethylhexyl)phthalate | ug/Kg | | | | 110 | 260 | J | 110 | < 310 | 310 | U | 130 | 260 | 300 | J | 120 | < 240 | 240 | U | 98 | | | | | < 290 | 290 | U | 120 | | | | |
| Caprolactam | ug/Kg | | | | < 260 | 260 | U | 260 | < 310 | 310 | U | 310 | < 300 | 300 | U | 300 | < 240 | 240 | U | 240 | | | | | < 290 | 290 | U | 290 | | | | |
| Carbazole | ug/Kg | | | | < 1900 | 1,900 | U | 290 | < 2200 | 2,200 | U | 330 | < 2100 | 2,100 | U | 320 | < 1700 | 1,700 | U | 260 | | | | | < 2000 | 2,000 | U | 310 | | | | |
| Chrysene | ug/Kg | 1,000 | 3,900 | 1,000 | 1,600 | 260 | | 130 | 430 | 310 | | 150 | < 300 | 300 | U | 140 | < 240 | 240 | U | 110 | | | | | 840 | 290 | | 140 | | | | |
| Dibenz(a,h)anthracene | ug/Kg | 330 | 330 | 330 | 160 | 150 | | 120 | < 180 | 180 | U | 140 | < 170 | 170 | U | 140 | < 140 | 140 | U | 110 | | | | | < 160 | 160 | U | 130 | | | | |
| Dibenzofuran | ug/Kg | | | 7,000 | < 260 | 260 | U | 110 | < 310 | 310 | U | 130 | < 300 | 300 | U | 120 | < 240 | 240 | U | 100 | | | | | < 290 | 290 | U | 120 | | | | |
| Diethyl phthalate | ug/Kg | | | | < 260 | 260 | U | 120 | < 310 | 310 | U | 140 | < 300 | 300 | U | 130 | < 240 | 240 | U | 110 | | | | | < 290 | 290 | U | 130 | | | | |
| Dimethylphthalate | ug/Kg | | | | < 260 | 260 | U | 120 | < 310 | 310 | U | 140 | < 300 | 300 | U | 130 | < 240 | 240 | U | 110 | | | | | < 290 | 290 | U | 130 | | | | |
| Di-n-butylphthalate | ug/Kg | | | | < 260 | 260 | U | 100 | < 310 | 310 | U | 120 | < 300 | 300 | U | 110 | < 240 | 240 | U | 91 | | | | | < 290 | 290 | U | 110 | | | | |
| Di-n-octylphthalate | ug/Kg | | | | < 260 | 260 | U | 97 | < 310 | 310 | U | 110 | < 300 | 300 | U | 110 | < 240 | 240 | U | 88 | | | | | < 290 | 290 | U | 110 | | | | |
| Fluoranthene | ug/Kg | 100,000 | 100,000 | 100,000 | 2,900 | 260 | | 120 | 480 | 310 | | 140 | < 300 | 300 | U | 140 | < 240 | 240 | U | 110 | | | | | 970 | 290 | | 130 | | | | |

# TABLE 6B
# SURFACE SOIL LABORATORY ANALYTICAL RESULTS SUMMARY

## REMEDIAL INVESTIGATION
## 109-125 MARBLEDALE ROAD
## TUCKAHOE, NEW YORK
## BCP #C360143

| Analytes | Lab Sample Id<br>Collection Date<br>Client Id<br>Matrix | Part 375 Soil Cleanup Objectives | | | BJ07750<br>4/23/2015<br>SS-8<br>Soil | | | | BJ07751<br>4/23/2015<br>SS-9<br>Soil | | | | BJ07752<br>4/23/2015<br>SS-10<br>Soil | | | | BJ07753<br>4/23/2015<br>SS-EB-8<br>Soil | | | | BJ07754<br>4/23/2015<br>TRIP BLANK LOW<br>Soil | | | | BJ07755<br>4/23/2015<br>SS-107<br>Soil | | | | BJ07756<br>4/23/2015<br>TRIP BLANK HIGH<br>Soil | | | |
|---|---|---|---|---|---|---|---|---|---|---|---|---|---|---|---|---|---|---|---|---|---|---|---|---|---|---|---|---|---|---|---|---|
| | Units | NY-Res. | NY-ResRestrict | NY-UnRestricted | Result | RL | Qual | MDL | Result | RL | Qual | MDL | Result | RL | Qual | MDL | Result | RL | Qual | MDL | Result | RL | Qual | MDL | Result | RL | Qual | MDL | Result | RL | Qual | MDL |
| Fluorene | ug/Kg | 100,000 | 100,000 | 30,000 | < 260 | 260 | U | 120 | < 310 | 310 | U | 150 | < 300 | 300 | U | 140 | < 240 | 240 | U | 110 | | | | | < 290 | 290 | U | 130 | | | | |
| Hexachlorobenzene | ug/Kg | | | | < 150 | 150 | U | 110 | < 180 | 180 | U | 130 | < 170 | 170 | U | 120 | < 140 | 140 | U | 100 | | | | | < 160 | 160 | U | 120 | | | | |
| Hexachlorobutadiene | ug/Kg | | | | < 260 | 260 | U | 140 | < 310 | 310 | U | 160 | < 300 | 300 | U | 150 | < 240 | 240 | U | 120 | | | | | < 290 | 290 | U | 150 | | | | |
| Hexachlorocyclopentadiene | ug/Kg | | | | < 260 | 260 | U | 120 | < 310 | 310 | U | 130 | < 300 | 300 | U | 130 | < 240 | 240 | U | 100 | | | | | < 290 | 290 | U | 120 | | | | |
| Hexachloroethane | ug/Kg | | | | < 150 | 150 | U | 110 | < 180 | 180 | U | 130 | < 170 | 170 | U | 130 | < 140 | 140 | U | 100 | | | | | < 160 | 160 | U | 120 | | | | |
| Indeno(1,2,3-cd)pyrene | ug/Kg | 500 | 500 | 500 | 520 | 260 | | 130 | 190 | 310 | J | 150 | < 300 | 300 | U | 140 | < 240 | 240 | U | 110 | | | | | 340 | 290 | | 140 | | | | |
| Isophorone | ug/Kg | | | | < 150 | 150 | U | 110 | < 180 | 180 | U | 120 | < 170 | 170 | U | 120 | < 140 | 140 | U | 96 | | | | | < 160 | 160 | U | 110 | | | | |
| Naphthalene | ug/Kg | 100,000 | 100,000 | 12,000 | < 260 | 260 | U | 110 | < 310 | 310 | U | 130 | < 300 | 300 | U | 120 | < 240 | 240 | U | 98 | | | | | < 290 | 290 | U | 120 | | | | |
| Nitrobenzene | ug/Kg | | | | < 150 | 150 | U | 130 | < 180 | 180 | U | 150 | < 170 | 170 | U | 150 | < 140 | 140 | U | 120 | | | | | < 160 | 160 | U | 140 | | | | |
| N-Nitrosodimethylamine | ug/Kg | | | | < 260 | 260 | U | 110 | < 310 | 310 | U | 120 | < 300 | 300 | U | 120 | < 240 | 240 | U | 96 | | | | | < 290 | 290 | U | 120 | | | | |
| N-Nitrosodi-n-propylamine | ug/Kg | | | | < 150 | 150 | U | 120 | < 180 | 180 | U | 140 | < 170 | 170 | U | 140 | < 140 | 140 | U | 110 | | | | | < 160 | 160 | U | 130 | | | | |
| N-Nitrosodiphenylamine | ug/Kg | | | | < 150 | 150 | U | 140 | < 180 | 180 | U | 170 | < 170 | 170 | U | 160 | < 140 | 140 | U | 130 | | | | | < 160 | 160 | U | 160 | | | | |
| Pentachlorophenol | ug/Kg | 2,400 | 6,700 | 800 | < 260 | 260 | U | 140 | < 310 | 310 | U | 170 | < 300 | 300 | U | 160 | < 240 | 240 | U | 130 | | | | | < 290 | 290 | U | 150 | | | | |
| Phenanthrene | ug/Kg | 100,000 | 100,000 | 100,000 | 940 | 150 | | 110 | 390 | 180 | | 130 | < 170 | 170 | U | 120 | < 140 | 140 | U | 98 | | | | | 660 | 160 | | 120 | | | | |
| Phenol | ug/Kg | 100,000 | 100,000 | 330 | < 260 | 260 | U | 120 | < 310 | 310 | U | 140 | < 300 | 300 | U | 140 | < 240 | 240 | U | 110 | | | | | < 290 | 290 | U | 130 | | | | |
| Pyrene | ug/Kg | 100,000 | 100,000 | 100,000 | 2,300 | 260 | | 130 | 390 | 310 | | 150 | < 300 | 300 | U | 150 | < 240 | 240 | U | 120 | | | | | 880 | 290 | | 140 | | | | |
| **1,4-dioxane By SW8260C** | | | | | | | | | | | | | | | | | | | | | | | | | | | | | | | | |
| 1,4-dioxane | ug/kg | 9,800 | 13,000 | 100 | < 100 | 100 | U | 73 | < 100 | 100 | U | 100 | < 100 | 100 | U | 76 | < 100 | 100 | U | 63 | < 100 | 100 | U | 40 | < 100 | 100 | U | 68 | < 5000 | 5,000 | U | 2000 |
| **Miscellaneous/Inorganics** | | | | | | | | | | | | | | | | | | | | | | | | | | | | | | | | |
| Total Cyanide (SW9010C Distillation) | mg/Kg | | | | < 1.1 | 1.1 | U | 0.57 | < 0.67 | 0.67 | U | 0.33 | < 0.64 | 0.64 | U | 0.32 | < 0.52 | 0.52 | U | 0.26 | | | | | < 0.62 | 0.62 | U | 0.31 | | | | |
| **Metals, Total** | | | | | | | | | | | | | | | | | | | | | | | | | | | | | | | | |
| Aluminum | mg/Kg | | | | 9,580 | 33 | | 6.7 | 9,450 | 44 | | 8.8 | 16,500 | 44 | | 8.8 | 741 | 3.6 | | 0.71 | | | | | 6,180 | 37 | | 7.3 | | | | |
| Antimony | mg/Kg | | | | < 1.7 | 1.7 | U | 1.7 | < 2.2 | 2.2 | U | 2.2 | < 2.2 | 2.2 | U | 2.2 | < 1.8 | 1.8 | U | 1.8 | | | | | < 1.8 | 1.8 | U | 1.8 | | | | |
| Arsenic | mg/Kg | 16 | 16 | 13 | 1.7 | 0.7 | * | 0.67 | 1.8 | 0.9 | * | 0.88 | 4.5 | 0.9 | * | 0.88 | < 0.7 | 0.7 | U* | 0.71 | | | | | 2 | 0.7 | * | 0.73 | | | | |
| Barium | mg/Kg | 350 | 400 | 350 | 207 | 0.7 | | 0.33 | 115 | 0.9 | | 0.44 | 77.8 | 0.9 | | 0.44 | 4.3 | 0.7 | | 0.36 | | | | | 55 | 0.7 | | 0.37 | | | | |
| Beryllium | mg/Kg | 14 | 72 | 7.2 | 0.3 | 0.27 | | 0.13 | 0.32 | 0.35 | B | 0.18 | 0.52 | 0.35 | | 0.18 | < 0.29 | 0.29 | U | 0.14 | | | | | 0.22 | 0.29 | B | 0.15 | | | | |
| Cadmium | mg/Kg | 2.5 | 4.3 | 2.5 | < 0.33 | 0.33 | U | 0.13 | < 0.44 | 0.44 | U | 0.18 | < 0.44 | 0.44 | U | 0.18 | < 0.36 | 0.36 | U | 0.14 | | | | | < 0.37 | 0.37 | U | 0.15 | | | | |
| Calcium | mg/Kg | | | | 71,400 | 33 | | 31 | 6,300 | 44 | | 40 | 2,440 | 44 | | 40 | 126 | 3.6 | | 3.3 | | | | | 80,700 | 37 | | 34 | | | | |
| Chromium | mg/Kg | | | 30 | 20.5 | 0.33 | | 0.33 | 26 | 0.44 | | 0.44 | 28.5 | 0.44 | | 0.44 | 3.9 | 0.36 | | 0.36 | | | | | 11.5 | 0.37 | | 0.37 | | | | |
| Cobalt | mg/Kg | | | | 8.73 | 0.33 | * | 0.33 | 7.92 | 0.44 | * | 0.44 | 10 | 0.44 | * | 0.44 | 0.67 | 0.36 | * | 0.36 | | | | | 5.97 | 0.37 | * | 0.37 | | | | |
| Copper | mg/Kg | 270 | 270 | 50 | 35.5 | 0.33 | N* | 0.33 | 29.7 | 0.44 | N* | 0.44 | 29.4 | 0.44 | N* | 0.44 | 2.19 | 0.36 | N* | 0.36 | | | | | 45.3 | 0.37 | N* | 0.37 | | | | |
| Iron | mg/Kg | | | | 18,400 | 33 | * | 33 | 16,900 | 44 | * | 44 | 25,400 | 44 | * | 44 | 1,960 | 36 | * | 36 | | | | | 14,300 | 37 | * | 37 | | | | |
| Lead | mg/Kg | 400 | 400 | 63 | 77.9 | 0.7 | | 0.33 | 45.8 | 0.9 | | 0.44 | 25.9 | 0.9 | | 0.44 | 1.3 | 0.7 | | 0.36 | | | | | 27.9 | 0.7 | | 0.37 | | | | |
| Magnesium | mg/Kg | | | | 44,300 | 33 | | 33 | 5,530 | 44 | | 44 | 5,070 | 44 | | 44 | 226 | 3.6 | | 3.6 | | | | | 24,700 | 37 | | 37 | | | | |
| Manganese | mg/Kg | 2,000 | 2,000 | 1,600 | 348 | 3.3 | N | 3.3 | 304 | 4.4 | N | 4.4 | 514 | 4.4 | N | 4.4 | 28.3 | 0.36 | N | 0.36 | | | | | 251 | 3.7 | N | 3.7 | | | | |
| Mercury | mg/Kg | 0.81 | 0.81 | 0.18 | 0.09 | 0.03 | N | 0.02 | 0.06 | 0.03 | N | 0.02 | 0.03 | 0.03 | N | 0.02 | < 0.03 | 0.03 | UN | 0.02 | | | | | 0.03 | 0.03 | BN | 0.02 | | | | |
| Nickel | mg/Kg | 140 | 310 | 30 | 17 | 0.33 | * | 0.33 | 17.7 | 0.44 | * | 0.44 | 18.1 | 0.44 | * | 0.44 | 1.02 | 0.36 | * | 0.36 | | | | | 11.7 | 0.37 | * | 0.37 | | | | |
| Potassium | mg/Kg | | | | 4,490 | 67 | | 26 | 3,230 | 88 | | 34 | 2,240 | 88 | | 34 | 129 | 71 | | 28 | | | | | 1,720 | 73 | | 29 | | | | |
| Selenium | mg/Kg | 36 | 180 | 3.9 | < 1.3 | 1.3 | U | 1.1 | < 1.8 | 1.8 | U | 1.5 | < 1.8 | 1.8 | U | 1.5 | < 1.4 | 1.4 | U | 1.2 | | | | | < 1.5 | 1.5 | U | 1.2 | | | | |
| Silver | mg/Kg | 36 | 180 | 2 | < 0.33 | 0.33 | U | 0.33 | < 0.44 | 0.44 | U | 0.44 | < 0.44 | 0.44 | U | 0.44 | < 0.36 | 0.36 | U | 0.36 | | | | | < 0.37 | 0.37 | U | 0.37 | | | | |
| Sodium | mg/Kg | | | | 159 | 7 | N | 2.9 | 150 | 9 | N | 3.8 | 84 | 9 | N | 3.8 | 14 | 7 | N | 3.1 | | | | | 286 | 7 | N | 3.2 | | | | |
| Thallium | mg/Kg | | | | < 1.3 | 1.3 | U | 1.3 | < 1.8 | 1.8 | U | 1.8 | < 1.8 | 1.8 | U | 1.8 | < 1.4 | 1.4 | U | 1.4 | | | | | < 1.5 | 1.5 | U | 1.5 | | | | |
| Vanadium | mg/Kg | | | | 33.8 | 0.3 | N | 0.33 | 30.7 | 0.4 | N | 0.44 | 37.9 | 0.4 | N | 0.44 | 3.7 | 0.4 | N | 0.36 | | | | | 36.4 | 0.4 | N | 0.37 | | | | |
| Zinc | mg/Kg | 2,200 | 10,000 | 109 | 159 | 6.7 | | 3.3 | 78.1 | 0.9 | | 0.44 | 65.9 | 0.9 | | 0.44 | 4.3 | 0.7 | | 0.36 | | | | | 74.6 | 0.7 | | 0.37 | | | | |
| **PCBs By SW8082A** | | | | | | | | | | | | | | | | | | | | | | | | | | | | | | | | |
| PCB-1016 | ug/Kg | 1,000 | | 100 | < 38 | 38 | U | 38 | < 44 | 44 | U | 44 | < 41 | 41 | U | 41 | < 34 | 34 | U | 34 | | | | | < 40 | 40 | U | 40 | | | | |
| PCB-1221 | ug/Kg | 1,000 | | 100 | < 38 | 38 | U | 38 | < 44 | 44 | U | 44 | < 41 | 41 | U | 41 | < 34 | 34 | U | 34 | | | | | < 40 | 40 | U | 40 | | | | |
| PCB-1232 | ug/Kg | 1,000 | | 100 | < 38 | 38 | U | 38 | < 44 | 44 | U | 44 | < 41 | 41 | U | 41 | < 34 | 34 | U | 34 | | | | | < 40 | 40 | U | 40 | | | | |
| PCB-1242 | ug/Kg | 1,000 | | 100 | < 38 | 38 | U | 38 | < 44 | 44 | U | 44 | < 41 | 41 | U | 41 | < 34 | 34 | U | 34 | | | | | < 40 | 40 | U | 40 | | | | |
| PCB-1248 | ug/Kg | 1,000 | | 100 | < 38 | 38 | U | 38 | < 44 | 44 | U | 44 | < 41 | 41 | U | 41 | < 34 | 34 | U | 34 | | | | | < 40 | 40 | U | 40 | | | | |
| PCB-1254 | ug/Kg | 1,000 | | 100 | < 38 | 38 | U | 38 | < 44 | 44 | U | 44 | < 41 | 41 | U | 41 | < 34 | 34 | U | 34 | | | | | < 40 | 40 | U | 40 | | | | |
| PCB-1260 | ug/Kg | 1,000 | | 100 | < 38 | 38 | U | 38 | < 44 | 44 | U | 44 | < 41 | 41 | U | 41 | < 34 | 34 | U | 34 | | | | | < 40 | 40 | U | 40 | | | | |

# TABLE 6B
# SURFACE SOIL LABORATORY ANALYTICAL RESULTS SUMMARY

## REMEDIAL INVESTIGATION
## 109-125 MARBLEDALE ROAD
## TUCKAHOE, NEW YORK
## BCP #C360143

| Analytes | Lab Sample Id<br>Collection Date<br>Client Id<br>Matrix | Part 375 Soil Cleanup Objectives | | | BJ07750<br>4/23/2015<br>SS-8<br>Soil | | | | BJ07751<br>4/23/2015<br>SS-9<br>Soil | | | | BJ07752<br>4/23/2015<br>SS-10<br>Soil | | | | BJ07753<br>4/23/2015<br>SS-EB-8<br>Soil | | | | BJ07754<br>4/23/2015<br>TRIP BLANK LOW<br>Soil | | | | BJ07755<br>4/23/2015<br>SS-107<br>Soil | | | | BJ07756<br>4/23/2015<br>TRIP BLANK HIGH<br>Soil | | | |
|---|---|---|---|---|---|---|---|---|---|---|---|---|---|---|---|---|---|---|---|---|---|---|---|---|---|---|---|---|---|---|---|---|
| | Units | NY-Res. | NY-ResRestrict | NY-UnRestricted | Result | RL | Qual | MDL | Result | RL | Qual | MDL | Result | RL | Qual | MDL | Result | RL | Qual | MDL | Result | RL | Qual | MDL | Result | RL | Qual | MDL | Result | RL | Qual | MDL |
| PCB-1262 | ug/Kg | | | | < 38 | 38 | U | 38 | < 44 | 44 | U | 44 | < 41 | 41 | U | 41 | < 34 | 34 | U | 34 | | | | | < 40 | 40 | U | 40 | | | | |
| PCB-1268 | ug/Kg | | | | < 38 | 38 | U | 38 | < 44 | 44 | U | 44 | < 41 | 41 | U | 41 | < 34 | 34 | U | 34 | | | | | < 40 | 40 | U | 40 | | | | |

Qualifiers

| | |
|---|---|
| U | The compound was anlayzed for but not detected at or above the MDL.<br>The number immediately preceding the "U" represents the PQL reporting level<br>corrected for percent solids, weight and/or volume calculations, and dilution factors. |
| J | The value is estimated. This flag is used<br>a) on form 1 when the compound is reported above the MDL, but below the PQL, and<br>b) on the Tentatively Identified Compounds (TIC) form for all compounds identified. |
| N | The concentration is based on the response fo the nearest internal. This flag<br>is used on the TIC form for all compounds identified. |
| S | This compound is a solvent that is used in the laboratory. Laboratory contamination is<br>suspected if concentration is less than five times the reporting level. |
| D | The reported concentration is the result of a diluted analysis. |
| (*) | See report for comment. |

Result Detected

RL Exceeds Criteria

Result Exceeds Criteria

1. Samples were obtained by HydroEnvironmental Solutions, Inc. of Somers, NY on April 23, 2015 and analyzed by Phoenix Environmental Laboratories, Inc. of Manchester, CT.
2. Phoenix Environmental reviewed the analytical data and compared the analytical Reporting Limits to the NYSDEC Part 375 Soil Cleanup Objectives.
3. Any Regulatory Exceedances are color coded.
4. Sample SS-107 is a duplicate sample of SS-7 for QA/QC control.

# Table 7
# Groundwater Monitoring Data and Elevations

## Remedial Investigation
## 109-125 Marbledale Road
## Tuckahoe, New York
## BCP #C360143

| Well | Ground Elevation | 5/11/2015 | | 5/18/2015 | | 5/21/2015 | |
|---|---|---|---|---|---|---|---|
| | | DTW | Water Table Elevation | DTW | Water Table Elevation | DTW | Water Table Elevation |
| **MW-1** | 134.15 | 21.00 | 113.15 | 21.69 | 112.46 | 22.42 | 111.73 |
| **MW-2** | 147.85 | 29.54 | 118.31 | 29.75 | 118.10 | 30.09 | 117.76 |
| **MW-3** | 150.97 | 18.3 | 132.67 | 19.07 | 131.90 | 19.71 | 131.26 |
| **MW-4** | 132.93 | 20.1 | 112.83 | 20.84 | 112.09 | 21.09 | 111.84 |
| **MW-5** | 138.56 | 25.37 | 113.19 | 26.23 | 112.33 | 26.6 | 111.96 |
| **MW-6** | 135.70 | 22.58 | 113.12 | 23.36 | 112.34 | 23.5 | 112.2 |
| **MW-7** | 146.74 | 33.26 | 113.48 | 33.92 | 112.82 | 34.51 | 112.23 |
| **MW-8** | 149.22 | 20.87 | 128.35 | 21.38 | 127.84 | 21.65 | 127.57 |
| **MW-9** | 150.21 | 17.87 | 132.34 | 18.45 | 131.76 | 18.6 | 131.61 |

Notes:
1. DTW (depth to water) in feet below grade (ftbg)
2. Elevations referenced to North American Vertical Datum - 1988 (NAVD-88) in feet.
Measurements provided on site survey (Figure 3) provided by Mr. Michael W. Finkbeiner.

**Table 8**
**Remedial Investigation**
**Shallow and Subsurface Soil Data Summary**

**109-125 Marbledale Road**
**Tuckahoe, New York**
**BCP #360143**

| Analyte | | NYSDEC BCP SCOs | | | Shallow Soil (11 samples) | | Subsurface Soil (27 samples) | |
|---|---|---|---|---|---|---|---|---|
| | | NY-Restricted | NY-Residential Restricted | NY-UnRestricted | Frequency of Detection | Range of Detected Concentrations | Frequency of Detection | Range of Detected Concentrations |
| **Volatiles (TCL) By SW8260C** | | | | | | | | |
| Acetone | ug/Kg | 100,000 | 100,000 | 50 | 4 | 6.9-370 | 14 | 20-250 |
| Benzene | ug/Kg | 2,900 | 4,800 | 60 | | | 6 | 5.9-1,800 |
| Carbon Disulfide | ug/Kg | | | | | | 5 | 1.2-6.9 |
| Dichlorodifluoromethane | ug/Kg | | | | | | 5 | 8-420 |
| Ethylbenzene | ug/Kg | 30,000 | 41,000 | 1,000 | | | 5 | 23-1,200 |
| Isopropylbenzene | ug/Kg | | | | | | 3 | 27-6,900 |
| m&p-Xylene | ug/Kg | | | | 1 | 78 | 9 | 21-4,500 |
| Methyl ethyl ketone | ug/Kg | 100,000 | 100,000 | 120 | | | 7 | 11-110 |
| Methylcyclohexane | ug/Kg | | | | | | 4 | 4.1-9,200 |
| o-Xylene | ug/Kg | | | | | | 7 | 5.1-92 |
| Toluene | ug/Kg | 100,000 | 100,000 | 700 | | | 6 | 49-1,000 |
| Total Xylenes | ug/Kg | | 100,000 | 260 | | | 7 | 13.5-4,500 |
| Trichloroethene | ug/Kg | 10,000 | 21,000 | 470 | | | 1 | 330 |
| Trichlorofluoromethane | ug/Kg | | | | | | 2 | 46-75 |
| **Semivolatiles By SW8270D** | | | | | | | | |
| 1,1-Biphenyl | ug/Kg | | | | | | 8 | 170-6,500 |
| 3&4-Methylphenol (m&p-cresol) | ug/Kg | | | | | | 7 | 420-1,200 |
| Acenaphthene | ug/Kg | 100,000 | 100,000 | 20,000 | | | 2 | 350-790 |
| Acenaphthylene | ug/Kg | 100,000 | 100,000 | 100,000 | 4 | 130-210 | 1 | 810 |
| Anthracene | ug/Kg | 100,000 | 100,000 | 100,000 | 6 | 140-320 | 9 | 300-2,200 |
| Benz(a)anthracene | ug/Kg | 1,000 | 1,000 | 1,000 | 10 | 170-1,900 | 19 | 540-5,900 |
| Benzaldehyde | ug/Kg | | | | | | 1 | 620 |
| Benzo(a)pyrene | ug/Kg | 1,000 | 1,000 | 1,000 | 10 | 240-1,900 | 18 | 260-5,800 |
| Benzo(b)fluoranthene | ug/Kg | 1,000 | 1,000 | 1,000 | 10 | 340-2,900 | 21 | 350-7,700 |
| Benzo(ghi)perylene | ug/Kg | 100,000 | 100,000 | 100,000 | 10 | 160-540 | 8 | 140-2,900 |
| Benzo(k)fluoranthene | ug/Kg | 1,000 | 3,900 | 800 | 9 | 140-990 | 12 | 240-2,500 |
| Bis(2-ethylhexyl)phthalate | ug/Kg | | | | 2 | 110-260 | 16 | 240-32,000 |
| Chrysene | ug/Kg | 1,000 | 3,900 | 1,000 | 10 | 190-1,600 | 21 | 300-6,000 |
| Dibenz(a,h)anthracene | ug/Kg | 330 | 330 | 330 | 2 | 130-160 | 2 | 390-790 |
| Dibenzofuran | ug/Kg | | | 7,000 | | | 4 | 250-1,400 |
| Fluoranthene | ug/Kg | 100,000 | 100,000 | 100,000 | 10 | 140-2,900 | 23 | 450-9,200 |
| Fluorene | ug/Kg | 100,000 | 100,000 | 30,000 | | | 6 | 140-1,800 |
| Indeno(1,2,3-cd)pyrene | ug/Kg | 500 | 500 | 500 | 10 | 130-520 | 9 | 140-2,700 |
| Naphthalene | ug/Kg | 100,000 | 100,000 | 12,000 | | | 8 | 330-7,400 |
| Phenanthrene | ug/Kg | 100,000 | 100,000 | 100,000 | 9 | 140-940 | 23 | 220-10,000 |
| Pyrene | ug/Kg | 100,000 | 100,000 | 100,000 | 9 | 160-2,300 | 23 | 410-7,400 |
| **PCBs By SW8082A** | | | | | | | | |
| PCB-1248 | ug/Kg | 1,000 | | 100 | | | 1 | 1,300 |
| PCB-1260 | ug/Kg | 1,000 | | 100 | 2 | 56-71 | 3 | 130-1,100 |
| **Metals, Total** | | | | | | | | |
| Aluminum | mg/Kg | | | | 12 | 741-16,500 | 27 | 3,670-24,900 |
| Arsenic | mg/Kg | 16 | 16 | 13 | 11 | 1.2-4.5 | 27 | 0.9-25.1 |
| Barium | mg/Kg | 350 | 400 | 350 | 12 | 4.3-207 | 27 | 17-1,120 |
| Beryllium | mg/Kg | 14 | 72 | 7.2 | 11 | 0.2-0.52 | 17 | 0.25-0.61 |
| Cadmium | mg/Kg | 2.5 | 4.3 | 2.5 | 2 | 0.22-0.42 | 13 | 0.16-3.25 |
| Calcium | mg/Kg | | | | 12 | 126-80,700 | 27 | 5,090-168,000 |
| Chromium | mg/Kg | | | 30 | 12 | 3.9-28.5 | 27 | 7.23-84.7 |
| Cobalt | mg/Kg | | | | 12 | 0.67-12.3 | 27 | 2.68-12.9 |
| Copper | mg/kg | 270 | 270 | 50 | 12 | 2.19-64.5 | 27 | 4.26-150 |
| Iron | mg/Kg | | | | 12 | 1,960-27,500 | 27 | 5,030-73,300 |
| Lead | mg/Kg | 400 | 400 | 63 | 12 | 1.3-181 | 27 | 5.13-589 |
| Magnesium | mg/Kg | | | | 12 | 226-44,300 | 27 | 3,580-83,800 |
| Manganese | mg/Kg | 2,000 | 2,000 | 1,600 | 12 | 28.3-514 | 27 | 130-721 |
| Mercury | mg/Kg | 0.81 | 0.81 | 0.18 | 9 | 0.03-0.24 | 21 | 0.03-0.57 |
| Nickel | mg/Kg | 140 | 310 | 30 | 12 | 1.02-28.2 | 27 | 5.77-62 |
| Potassium | mg/Kg | | | | 12 | 129-4490 | 27 | 353-5,300 |
| Silver | mg/Kg | 36 | 180 | 2 | | | 8 | 0.84-6.45 |
| Sodium | mg/Kg | | | | 12 | 14-748 | 27 | 31.9-3,960 |
| Vanadium | mg/Kg | | | | 12 | 3.7-47.9 | 27 | 8.82-80.5 |
| Zinc | mg/Kg | 2,200 | 10,000 | 109 | 12 | 4.3-212 | 27 | 36.9-5,500 |
| **Miscellaneous/Inorganics** | | | | | | | | |
| Total Cyanide | mg/Kg | | | | | | 9 | 0.443-9.82 |

**TABLE 9**
**Chemical Release Mechanisms/Exposure Pathways in the Absence of Site Remediation**

**Remedial Investigation**
**109-125 Marbledale Road**
**Tuckahoe, New York**
**Brownfield Cleanup Program #C360143**

| Source Media | Release Mechanism | Exposure Media | Site Conditions | Viable Current Exposure Pathway? | Viable Future Exposure Pathway? |
|---|---|---|---|---|---|
| On-Site Soil/Fill | - | Surface Soil/Fill (0-2"bgs) | The site is approximately 3.45 acres in a predominantly commerical/industrial area of Tuckahoe. Surrounding land uses include auto repair shops, a gym and martial arts studio, and a brewery. The site is comprised of two contiguous parcels of vacant, undeveloped land. Fill thicknesses range from 8 to 85 feet across the Site. | Yes - surface soil/fill samples were collected; data are considered representative of conditions across the Site. COPC have been identified in surface soil/fill. Though the Site is unoccupied, there is field evidence of trespassing. Therefore, there is the potential for trespassers to contact COPC in the surface soil/fill where exposed. | Yes - Site redevelopment will result in the site being almost 100% covered with either buildings, sidewalks, asphalt-paved parking lots, or vegetative cover. Therefore, the only potential human receptors that may contact COPC in surface soil/fill are construction/utility workers improving or maintaining the site. Such exposure would be limited to the duration of construction/utility work. |
| | - | Subsurface Soil/Fill (> 2' bgs) | See description above for "Surface Soil/Fill" | No - Subsurface soil/fill samples were collected; data are considered representative of conditions across the site. COPC have been identified in subsurface soil/fill. However, it is not expected that Site workers, trespassers, or off-Site residents would contact COPC subsurface soil/fill. Therefore, there are no potentially complete exposure pathways. | Yes - Site redevelopment will result in the site being almost 100% covered with either buildings, sidewalks, asphalt-paved parking lots, or vegetative cover. Therefore, the only potential human receptors that may contact COPC in subsurface soil/fill are construction/utility workers improving or maintaining the Site. Such exposure would be limited to the duration of construction/utility work. |
| | Leaching | Groundwater | See descriptions above for "Surface Soil/Fill." Saturated conditions were encountered from 18 to 33 ftbg across the Site. General groundwater flow direction is to the south/southeast. Potable water will be provided to the Site by the Village of Tuckahoe. | No - Groundwater samples were collected. However, groundwater was not identified as an environmental medium of concern for the Site because it is not expected that humans will encounter groundwater. | No - Groundwater samples were collected. However, groundwater was not identified as an environmental medium of concern for the site because it is not expected that humans will encounter groundwater. It is not expected that construction/utility workers will encounter groundwater during future construction or excavation activities due to the depth of groundwater. |
| Soil Gas | Migration | Indoor Air | See description above for "Surface Soil/Fill." | Yes - Soil vapor samples were collected; data are considered representative of conditions across the site. COPC were identified in soil vapor. The Site is vacant and undeveloped, therefore there is no potential for soil vapor to migrate to indoor air of buildings. | Yes - Soil vapor samples were collected; data are considered representative of conditions across the site. COPC were identified in soil vapor. Therefore, there is the potential for soil vapor to migrate to indoor air of future structures on the Site, and there are potentially complete exposure pathways to future site workers and on-Site guests. |

**Notes**
COPC = chemicals of potential concern
bgs = below ground surface
ftbg = feet below grade

**Table 10**
**Non-carcinogenic Health Effects of Chemicals of Potential Concern**

**109-125 Marbledale Road**
**Tuckahoe, New York**
**BCP #360143**

| Chemical of Potential Concern | CAS # | Non-carcinogenic Oral Critical Effect | Non-carcinogenic Inhalation Critical Effect |
|---|---|---|---|
| **Volatile Organic Compounds** | | | |
| Acetone | 67-64-1 | Nephropathy | --- |
| Benzene | 71-43-2 | Decreased lymphocyte count | Decreased lymphocyte count |
| Carbon Disulfide | 75-15-0 | Fetal toxicity/malformations | Peripheral nervous system dysfuntion |
| Dichlorodifluoromethane | 75-71-8 | Decreased body weight | --- |
| Ethylbenzene | 100-41-4 | Liver and kidney toxicity | Developmental toxicity |
| Isopropylbenzene | 98-82-8 | Increased kidney weight | Increased kidney weight |
| m&p-Xylene | 179601-23-1 | Decreased body weight; increased mortality | Impaired motor coordination (decreased rotarod performance) |
| Methyl ethyl ketone | 78-93-3 | Decreased pup body weight | Developmental toxicity |
| Methylcyclohexane | 108-87-2 | --- | --- |
| o-Xylene | 95-47-6 | Decreased body weight; increased mortality | Impaired motor coordination (decreased rotarod performance) |
| Toluene | 108-88-3 | Increased kidney weight | Neurological effects in occupationally-exposed workers |
| Total Xylenes | 1330-20-7 | Decreased body weight; increased mortality | Impaired motor coordination (decreased rotarod performance) |
| Trichloroethene | 79-01-6 | --- | --- |
| Trichlorofluoromethane | 75-69-4 | Survival and histopathology | --- |
| Semivolatile Organic Compounds | | | |
| 1,1-Biphenyl | 92-52-4 | Renal papillary mineralization | --- |
| 3&4-Methylphenol (m&p-cresol) | PHNX - M&P CRESOL | --- | --- |
| Acenaphthene | 83-32-9 | Hepatoxicity | --- |
| Acenaphthylene | 208-96-8 | --- | --- |
| Anthracene | 120-12-7 | No effects reported | --- |
| Benz(a)anthracene | 56-55-3 | --- | --- |
| Benzaldehyde | 100-52-7 | Forestomach lesions, kidney toxicity | --- |
| Benzo(a)pyrene | 50-32-8 | --- | --- |
| Benzo(b)fluoranthene | 205-99-2 | --- | --- |
| Benzo(ghi)perylene | 191-24-2 | --- | --- |
| Benzo(k)fluoranthene | 207-08-9 | --- | --- |
| Bis(2-ethylhexyl)phthalate | 117-81-7 | Increased relative liver weight | |
| Chrysene | 218-01-9 | --- | --- |
| Dibenz(a,h)anthracene | 53-70-3 | --- | --- |
| Dibenzofuran | 132-64-9 | --- | --- |
| Fluoranthene | 206-44-0 | Nephropathy, increased liver weights, hematological alterations and clinical effects | --- |
| Fluorene | 86-73-7 | Decreased red blood cells, packed cell volume, and hemoglobin | --- |
| Indeno(1,2,3-cd)pyrene | 193-39-5 | --- | --- |
| Naphthalene | 91-20-3 | Decreased mean terminal body weight | Nasal effects: hyperplasia and metaplasia in respiratory and olfactory epithelium, respectively |
| Phenanthrene | 85-01-8 | --- | --- |
| Pyrene | 129-00-0 | Kidney effects (renal tubular pathology, decreased kidney weights) | --- |
| **PCBs** | | | |
| PCB-1248 | 12672-29-6 | --- | --- |
| PCB-1260 | 11096-82-5 | --- | --- |
| **Metals** | | | |
| Aluminum | 7429-90-5 | --- | --- |
| Arsenic | 7429-90-5 | Hyperpigmentation, keratosis, & possible vasular complications | --- |
| Barium | 7440-39-3 | Nephropathy | Hypertension |
| Beryllium | 7440-41-7 | Small intestinal lesions | Beryllium sensitization and progression to chronic beryllium disease |
| Cadmium | 7440-43-9 | Significant proteinuria | --- |
| Calcium | 7440-43-2 | --- | --- |
| Chromium | 7440-47-3 | No effects reported | --- |
| Cobalt | 7440-48-4 | --- | --- |
| Copper | 7440-50-8 | --- | --- |
| Iron | 7439-89-6 | --- | --- |
| Lead | 7439-92-1 | --- | --- |
| Magnesium | 7439-95-4 | --- | --- |
| Manganese | 7439-96-5 | Central nervous system effects | Impairment of neurobehavioral function |
| Mercury | 7439-97-6 | Autoimmune effects | --- |
| Nickel | 7440-02-0 | Decreased body and organ weights | --- |
| Potassium | 7440-09-7 | --- | --- |
| Silver | 7440-22-4 | Argyria | --- |
| Sodium | 7440-23-5 | --- | --- |
| Vanadium | 7440-62-2 | --- | --- |
| Zinc | 7440-66-6 | Decreases in red blood cells | --- |
| **Cyanide** | | | |
| Total Cyanide | 57-12-5 | Decreased body weight, thryroid effects, and myelin degeneration | --- |

**Notes**
Source: Integrated Risk Information System (IRIS) (USEPA, 2015
---= Not available

**Table 11**
**Carcinogenic Health Effects of Chemicals of Potential Concern**

**109-125 Marbledale Road**
**Tuckahoe, New York**
**BCP #360143**

| Chemical of Potential Concern | CAS # | Oral Cancer Type | Inhalation Cancer Type | Weight-of-Evidence Characterization* |
|---|---|---|---|---|
| **Volatile Organic Compounds** | | | | |
| Acetone | 67-64-1 | --- | --- | --- |
| Benzene | 71-43-2 | Leukemia | Leukemia | A |
| Carbon Disulfide | 75-15-0 | --- | --- | --- |
| Dichlorodifluoromethane | 75-71-8 | --- | --- | --- |
| Ethylbenzene | 100-41-4 | --- | --- | --- |
| Isopropylbenzene | 98-82-8 | --- | --- | D |
| m&p-Xylene | 179601-23-1 | --- | --- | --- |
| Methyl ethyl ketone | 78-93-3 | --- | --- | --- |
| Methylcyclohexane | 108-87-2 | --- | --- | --- |
| o-Xylene | 95-47-6 | --- | --- | --- |
| Toluene | 108-88-3 | --- | --- | --- |
| Total Xylenes | 1330-20-7 | --- | --- | --- |
| Trichloroethene | 79-01-6 | --- | --- | --- |
| Trichlorofluoromethane | 75-69-4 | --- | --- | --- |
| **Semivolatile Organic Compounds** | | | | |
| 1,1-Biphenyl | 92-52-4 | --- | --- | D |
| 3&4-Methylphenol (m&p-cresol) | PHNX - M&P CRESOL | --- | --- | C |
| Acenaphthene | 83-32-9 | --- | --- | --- |
| Acenaphthylene | 208-96-8 | --- | --- | D |
| Anthracene | 120-12-7 | --- | --- | D |
| Benz(a)anthracene | 56-55-3 | --- | --- | --- |
| Benzaldehyde | 100-52-7 | --- | --- | --- |
| Benzo(a)pyrene | 50-32-8 | Forestomach, squamous cell papillomas and carcinomas; forestomach, larynx and esophagus, papillomas and carcinomas | --- | B2 |
| Benzo(b)fluoranthene | 205-99-2 | --- | --- | B2 |
| Benzo(ghi)perylene | 191-24-2 | --- | --- | D |
| Benzo(k)fluoranthene | 207-08-9 | --- | --- | B2 |
| Bis(2-ethylhexyl)phthalate | 117-81-7 | Hepatocellular carcinoma and adenoma | --- | B2 |
| Chrysene | 218-01-9 | --- | --- | B2 |
| Dibenz(a,h)anthracene | 53-70-3 | --- | --- | B2 |
| Dibenzofuran | 132-64-9 | --- | --- | D |
| Fluoranthene | 206-44-0 | --- | --- | D |
| Fluorene | 86-73-7 | --- | --- | D |
| Indeno(1,2,3-cd)pyrene | 193-39-5 | --- | --- | B3 |
| Naphthalene | 91-20-3 | --- | --- | --- |
| Phenanthrene | 85-01-8 | --- | --- | D |
| Pyrene | 129-00-0 | --- | --- | D |
| **PCBs** | | | | |
| PCB-1248 | 12672-29-6 | --- | --- | --- |
| PCB-1260 | 11096-82-5 | --- | --- | --- |
| **Metals** | | | | |
| Aluminum | 7429-90-5 | --- | --- | --- |
| Arsenic | 7429-90-5 | Skin cancer | Lung cancer | A |
| Barium | 7440-39-3 | --- | --- | D |
| Beryllium | 7440-41-7 | --- | --- | B1 |
| Cadmium | 7440-43-9 | --- | Lung, trachea, bronchus cancer deaths | B1 |
| Calcium | 7440-43-2 | --- | --- | --- |
| Chromium | 7440-47-3 | --- | --- | D |
| Cobalt | 7440-48-4 | --- | --- | --- |
| Copper | 7440-50-8 | --- | --- | D |
| Iron | 7439-89-6 | --- | --- | --- |
| Lead | 7439-92-1 | --- | --- | B2 |
| Magnesium | 7439-95-4 | --- | --- | --- |
| Manganese | 7439-96-5 | --- | --- | D |
| Mercury | 7439-97-6 | --- | --- | C |
| Nickel | 7440-02-0 | --- | --- | --- |
| Potassium | 7440-09-7 | --- | --- | --- |
| Silver | 7440-22-4 | --- | --- | D |
| Sodium | 7440-23-5 | --- | --- | --- |
| Vanadium | 7440-62-2 | --- | --- | D |
| Zinc | 7440-66-6 | --- | --- | --- |
| **Cyanide** | | | | |
| Total Cyanide | 57-12-5 | --- | --- | D |

**Notes**
Source: Integrated Risk Information System (IRIS) (USEPA, 2015)
---= Not available
* USEPA Weight-of-Evidence Classification
A: Human carcinogen
B1: Probable human carcinogen; limited human data are available
B2: Probable human carcinogen; sufficient evidence in animals and inadequate or no evidence in humans
C: Possible human carcinogen
D: Not classifiable as to human carcinogenicity
---: Not evaluated

# Table 12
# Summary of Human Health Evaluation Risk Characterization

## Remedial Investigation
## 109-125 Marbledale Road
## Tuckahoe, New York
## BCP #C360143

| Scenario Timeframe | Receptor Population | Environmental Medium of Concern | Exposure Routes Evaluated | | | Likelihood of Exposure | | |
|---|---|---|---|---|---|---|---|---|
| | | | | | | Not Expected | Possible | Likely |
| Current | Site Worker Trespasser | Surface Soil/Fill | Ingestion | Dermal Contact | Inhalation | | x | |
| | Off-site Resident | Surface Soil/Fill | Ingestion | Dermal Contact | Inhalation | x | | |
| | Off-site Commercial Occupant | Surface Soil/Fill | Ingestion | Dermal Contact | Inhalation | x | | |
| Future | Site Worker | Surface Soil/Fill | Ingestion | Dermal Contact | Inhalation | | | x |
| | Construction/Utility Worker | Subsurface Soil/Fill | Ingestion | Dermal Contact | Inhalation | | | x |
| | Off-site Resident | Surface Soil/Fill | Ingestion | Dermal Contact | Inhalation | x | | |
| | Off-site Commercial Occupant | Subsurface Soil/Fill | Ingestion | Dermal Contact | Inhalation | x | | |
| | On-site Occupant | Surface Soil/Fill | Ingestion | Dermal Contact | Inhalation | x | | |

# APPENDICES

# APPENDIX A

## Westchester Soil Survey Map

Soil Map—Westchester County, New York
(109-125 Marbledale Road)

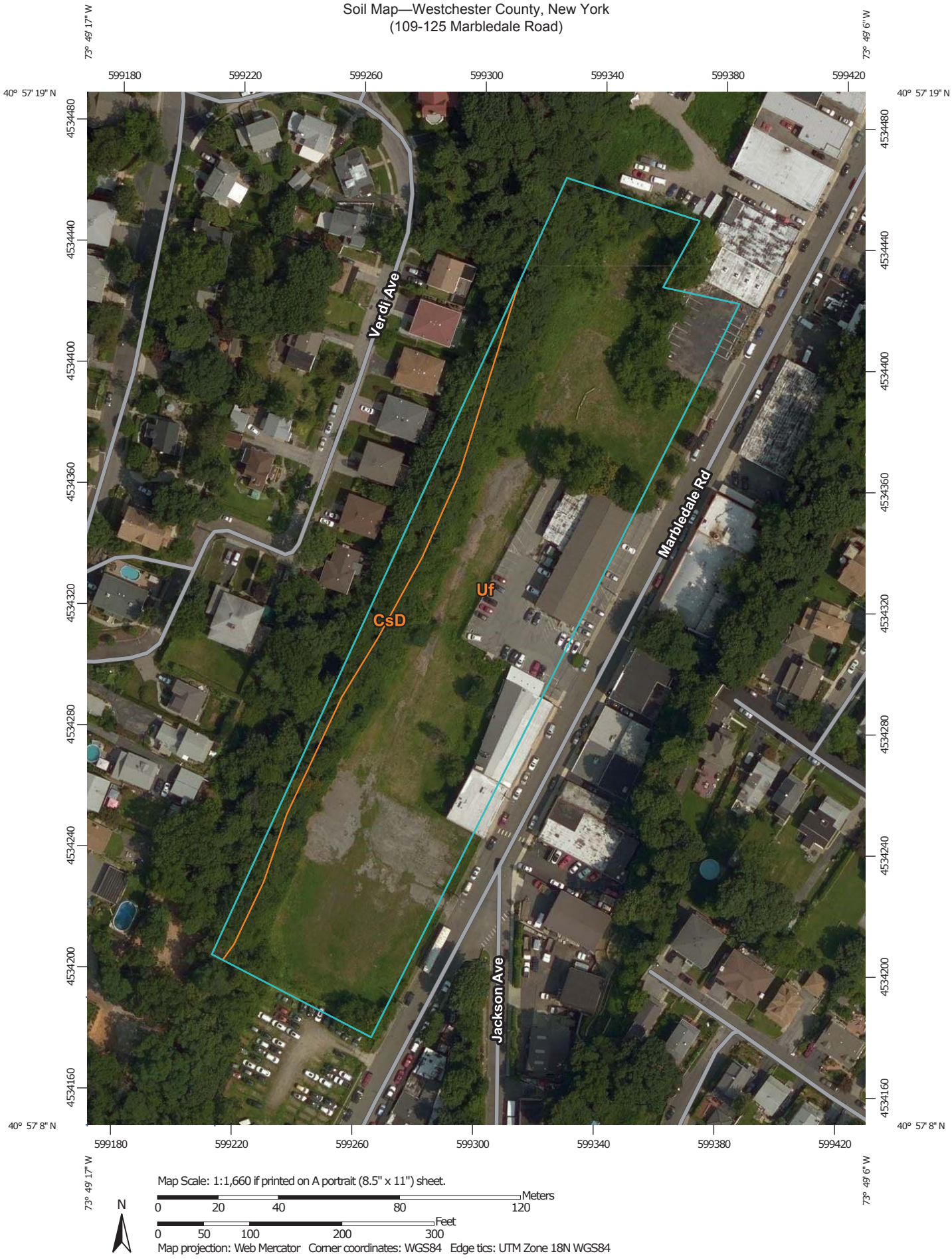

## MAP LEGEND

**Area of Interest (AOI)**

Area of Interest (AOI)

**Soils**

Soil Map Unit Polygons

Soil Map Unit Lines

Soil Map Unit Points

**Special Point Features**

Blowout

Borrow Pit

Clay Spot

Closed Depression

Gravel Pit

Gravelly Spot

Landfill

Lava Flow

Marsh or swamp

Mine or Quarry

Miscellaneous Water

Perennial Water

Rock Outcrop

Saline Spot

Sandy Spot

Severely Eroded Spot

Sinkhole

Slide or Slip

Sodic Spot

Spoil Area

Stony Spot

Very Stony Spot

Wet Spot

Other

Special Line Features

**Water Features**

Streams and Canals

**Transportation**

Rails

Interstate Highways

US Routes

Major Roads

Local Roads

**Background**

Aerial Photography

## MAP INFORMATION

The soil surveys that comprise your AOI were mapped at 1:12,000.

Warning: Soil Map may not be valid at this scale.

Enlargement of maps beyond the scale of mapping can cause misunderstanding of the detail of mapping and accuracy of soil line placement. The maps do not show the small areas of contrasting soils that could have been shown at a more detailed scale.

Please rely on the bar scale on each map sheet for map measurements.

Source of Map: Natural Resources Conservation Service
Web Soil Survey URL: http://websoilsurvey.nrcs.usda.gov
Coordinate System: Web Mercator (EPSG:3857)

Maps from the Web Soil Survey are based on the Web Mercator projection, which preserves direction and shape but distorts distance and area. A projection that preserves area, such as the Albers equal-area conic projection, should be used if more accurate calculations of distance or area are required.

This product is generated from the USDA-NRCS certified data as of the version date(s) listed below.

Soil Survey Area: Westchester County, New York
Survey Area Data: Version 10, Sep 17, 2014

Soil map units are labeled (as space allows) for map scales 1:50,000 or larger.

Date(s) aerial images were photographed: Jul 21, 2014—Aug 27, 2014

The orthophoto or other base map on which the soil lines were compiled and digitized probably differs from the background imagery displayed on these maps. As a result, some minor shifting of map unit boundaries may be evident.

# Map Unit Legend

| Westchester County, New York (NY119) | | | |
|---|---|---|---|
| **Map Unit Symbol** | **Map Unit Name** | **Acres in AOI** | **Percent of AOI** |
| CsD | Chatfield-Charlton complex, hilly, very rocky | 0.3 | 7.1% |
| Uf | Urban land | 4.2 | 92.9% |
| **Totals for Area of Interest** | | **4.5** | **100.0%** |

# APPENDIX B

## Prior Environmental Reports (CD)

# APPENDIX C

## Borehole Geologic Logs and Monitor Well Construction Details

| GEOLOGIC LOG<br>HydroEnvironmental SOLUTIONS, INC. | **OWNER**: Bilwin Development Affiliates, LLC<br>**WELL NO.:** MW-1<br>**PAGE** 1 **OF** 1 **PAGES** |
|---|---|
| **SITE LOCATION**: 109-125 Marbledale Road<br>Tuckahoe, New York<br>BCP Site #C360143 | **SCREEN SIZE & TYPE:** 2-inch Schedule 40 PVC<br>**SLOT NO.:** 20 **SETTING**: 25-40 ftbg |
| **DATE COMPLETED**: November 14, 2013 | **SAND PACK SIZE & TYPE:** #2 Morie<br>**SETTING:** 23-40 ftbg |
| **DRILLING COMPANY**: Soil Testing, Inc.<br>Oxford, Connecticut | **CASING SIZE & TYPE:** 2-inch Schedule 40 PVC |
| **DRILLING METHOD**: Diedrich D50M, 4.25" HSA | **SETTING:** +3-25 ftbg |
| **SAMPLING METHOD**: 2-inch split spoon | **SEAL TYPE:** Bentonite Chips |
| **OBSERVER**: WAC/ANE | **SETTING:** 21-23 ftbg |
| **REFERENCE POINT (RP)**: Grade | **BACKFILL TYPE**: Clean cutting |
| **ELEVATION OF RP**: | **STATIC WATER LEVEL**: 30.28 ftbg |
| **STICK-UP**: 3ft | **DEVELOPMENT METHOD**: |
| **SURFACE COMPLETION**: Steel casing | **DURATION**: – **YIELD**: – |
| **NOTES:** Phase II ESA | |
| **ABBREVIATIONS: SS = split spoon W = wash C = cuttings G = grab ST = shelby tube**<br>**REC = Recovery PPM = parts per million ftbg = feet below grade MC = macro core sampler** | |

| DEPTH (FEET) | | SAMPLE TYPE | BLOW COUNT | REC. (FEET) | PID READING (PPM) | DESCRIPTION |
|---|---|---|---|---|---|---|
| FROM | TO | | | | | |
| 5 | 7 | SS | 3-19-6-4 | 0.4 | 0.2 | Fill, consisting of CINDERS, FLY ASH, and MARBLE; dark black; dry; no odor |
| 10 | 12 | SS | 6-10-8-3 | 1 | 1.1 | Fill, consisting of CINDERS, FLY ASH, GLASS, and MARBLE; dark black; moist; slight odor |
| 15 | 17 | SS | 11-8-11-10 | - | - | No recovery |
| 20 | 22 | SS | 11-15-14-9 | 0.5 | 0.3 | Fill, consisting of SAND (fine) with some CONCRETE; dark black; wet; no odor |
| 25 | 27 | SS | 14-6-5-7 | 0.4 | 0.3 | Fill, consisting of CINDERS, FLY ASH, and some GLASS; black; dry; no odor |
| 30 | 32 | SS | 6-6-8-11 | 1 | 2.0 | Fill, consisting of SAND (fine to medium) with some GRAVEL (small, round), and PEET; brown and black, wet; slight odor |
| | | | | | | Water table @ 29 ftbg |
| | | | | | | |
| | | | | | | |
| | | | | | | |

| GEOLOGIC LOG<br>HydroEnvironmental SOLUTIONS, INC. | **OWNER**: Bilwin Development Affiliates, LLC<br>**WELL NO.:** MW-2<br>**PAGE** 1 **OF** 1 **PAGES** |
|---|---|
| **SITE LOCATION**: 109-125 Marbledale Road<br>Tuckahoe, New York<br>BCP Site #C360143 | **SCREEN SIZE & TYPE:** 2-inch Schedule 40 PVC<br>**SLOT NO.:** 20 **SETTING**: 27.5-52.5 ftbg |
| **DATE COMPLETED**: November 14 and 15, 2013 | **SAND PACK SIZE & TYPE:** #2 Morie<br>**SETTING:** 25.5-55.0 ftbg |
| **DRILLING COMPANY**: Soil Testing, Inc.<br>Oxford, Connecticut | **CASING SIZE & TYPE:** 2-inch Schedule 40 PVC |
| **DRILLING METHOD**: Diedrich D50M 4.25" HSA | **SETTING:** +3-27.5 ftbg |
| **SAMPLING METHOD**: 2-inch Split Spoon | **SEAL TYPE:** Bentonite Chips |
| **OBSERVER**: ANE | **SETTING:** 23.5-25.5 ftbg |
| **REFERENCE POINT (RP)**: Grade | **BACKFILL TYPE**: Clean cuttings |
| **ELEVATION OF RP**: | **STATIC WATER LEVEL**: 43.56 ftbg |
| **STICK-UP**: 3 ft | **DEVELOPMENT METHOD**: |
| **SURFACE COMPLETION**: Steel casing | **DURATION**: – **YIELD**: – |
| **NOTES:** Phase II ESA | |
| **ABBREVIATIONS: SS = split spoon W = wash C = cuttings G = grab ST = shelby tube**<br>**REC = Recovery PPM = parts per million ftbg = feet below grade MC = macro core sampler** | |

| DEPTH (FEET) | | SAMPLE TYPE | BLOW COUNT | REC. (FEET) | PID READING (PPM) | DESCRIPTION |
|---|---|---|---|---|---|---|
| FROM | TO | | | | | |
| 5 | 7 | SS | 6-14-32-17 | 1 | 0.0 | Fill, consisting of SAND (fine), CINDERS, ASH, and CONCRETE; dark black; dry; no odor |
| 10 | 12 | SS | 2-1-3-15 | 1 | 4.0 | Fill, consisting of ORGANIC MATERIAL with SAND (fine); dark black and white; moist; swampy odor |
| 15 | 17 | SS | 13-17-50-- | 0.5 | 2.6 | Fill, consisting of ORGANIC MATERIAL with SAND (fine); dark black and white; moist; swampy odor |
| 20 | 22 | SS | 43-24-20-19 | 1 | 1.7 | Fill, consisting of SAND (fine) with MARBLE and CONCRETE; dark black and white; dry; no odor |
| 25 | 27 | SS | 7-5-5-9 | 1 | 0.5 | Fill, consisting of SAND (fine to medium) with MARBLE; brown and white; dry; no odor |
| 30 | 32 | SS | 9-50-- | 0.5 | 1.5 | Fill, consisting of SAND (fine to medium) with MARBLE; brown and white; dry; no odor |
| | | | | | | |
| | | | | | | Refusal @ 31 ftbg, switch to air rotary |
| | | | | | | |
| | | | | | | |

| GEOLOGIC LOG<br>HydroEnvironmental SOLUTIONS, INC. | **OWNER**: Bilwin Development Affiliates, LLC<br>**WELL NO.:** MW-3<br>**PAGE** 1 **OF** 1 **PAGES** |
|---|---|
| **SITE LOCATION**: 109-125 Marbledale Road<br>Tuckahoe, New York | **SCREEN SIZE & TYPE:** 2-inch Schedule 40 PVC<br>**SLOT NO.:** 20 **SETTING**: 20-35 ftbg |
| **DATE COMPLETED**: November 14 and 15, 2013 | **SAND PACK SIZE & TYPE:** #2 Morie |
| **DRILLING COMPANY**: Soil Testing, Inc.<br>Oxford, Connecticut | **SETTING:** 18-35 ftbg<br>**CASING SIZE & TYPE:** 2-inch Schedule 40 PVC |
| **DRILLING METHOD**: Diedrich D50M 4.25" HSA | **SETTING:** +3-20 ftbg |
| **SAMPLING METHOD**: 2-inch split spoon | **SEAL TYPE:** Bentonite Chips |
| **OBSERVER**: ANE | **SETTING:** 16-18 ftbg |
| **REFERENCE POINT (RP)**: Grade | **BACKFILL TYPE**: Clean cuttings |
| **ELEVATION OF RP**: | **STATIC WATER LEVEL**: 25.65 ftbg |
| **STICK-UP**: 3ft | **DEVELOPMENT METHOD**: |
| **SURFACE COMPLETION**: Steel casing | **DURATION**: – **YIELD**: – |
| **NOTES:** Phase II ESA | |
| **ABBREVIATIONS: SS = split spoon W = wash C = cuttings G = grab ST = shelby tube**<br>**REC = Recovery PPM = parts per million ftbg = feet below grade MC = macro core sampler** | |

| DEPTH (FEET) | | SAMPLE TYPE | BLOW COUNT | REC. (FEET) | PID READING (PPM) | DESCRIPTION |
|---|---|---|---|---|---|---|
| FROM | TO | | | | | |
| 5 | 7 | SS | 16-18-7-6 | 1 | 0.0 | Fill, consisting of SAND (fine to medium) with GRAVEL (small, round) and some MARBLE; black; dry; no odor |
| 10 | 12 | SS | 50-- | 0 | - | No recovery |
| 15 | 17 | SS | 1-1-1 | 0.5 | 6.5 | Fill, consisting of SAND (fine to medium) with TAR; black; moist and sticky; strong odor |
| 20 | 22 | SS | 40-50-- | 1 | 0.0 | Fill, consisting of SAND (fine) with MARBLE; black and white; dry; swampy odor |
| 25 | 27 | SS | 21-39-27-20 | 1 | 8.2 | Fill, consisting of SAND (fine to medium) with MARBLE; black and brown; dry; no odor |
| 30 | 32 | SS | 27-8-6-9 | 1 | 3.3 | Fill, consisting of SAND (fine) with CLAY, MARBLE, and some GLASS; black and white; dry; no odor |
| 35 | 37 | SS | 19-14-10-9 | 1.5 | 1.4 | Fill, consisting of SAND (fine to medium) with GRAVEL (small, round); black; wet; no odor |
| | | | | | | |
| | | | | | | Water table @ 25 ftbg |
| | | | | | | |

| GEOLOGIC LOG<br>HydroEnvironmental SOLUTIONS, INC. | **OWNER**: Bilwin Development Affiliates, LLC<br>**WELL NO.:** MW-4<br>**PAGE** 1 **OF** 1 **PAGES** |
|---|---|
| **SITE LOCATION**: 109-125 Marbledale Road<br>Tuckahoe, New York<br>BCP Site #C360143 | **SCREEN SIZE & TYPE:** 10 feet 4" Schedule 40 PVC<br>**SLOT NO.:** 020 **SETTING**: 29.5 - 19.5 ftbg |
| **DATE COMPLETED**: April 16, 2015 | **SAND PACK SIZE & TYPE:** No. 2 filter sand |
| **DRILLING COMPANY**: SoilTesting, Inc.<br>Oxford, Connecticut | **SETTING:** 29.5 - 17.5 ftbg<br>**CASING SIZE & TYPE:** 20 feet 4" Schedule 40 PVC |
| **DRILLING METHOD**: Diedrich D120 7.25" HSA | **SETTING:** 19.5 ftbg – 0.5 ft above grade |
| **SAMPLING METHOD**: | **SEAL TYPE:** 5/8" Bentonite chips |
| **OBSERVER**: REG | **SETTING:** 17.5 – 15.5 ftbg |
| **REFERENCE POINT (RP)**: Grade | **BACKFILL TYPE**: Cuttings |
| **ELEVATION OF RP**: | **STATIC WATER LEVEL**: 19.66 ftbg |
| **STICK-UP**: 0.5 feet | **DEVELOPMENT METHOD**: |
| **SURFACE COMPLETION**: Steel casing | **DURATION**: – **YIELD**: – |
| **NOTES:** | |

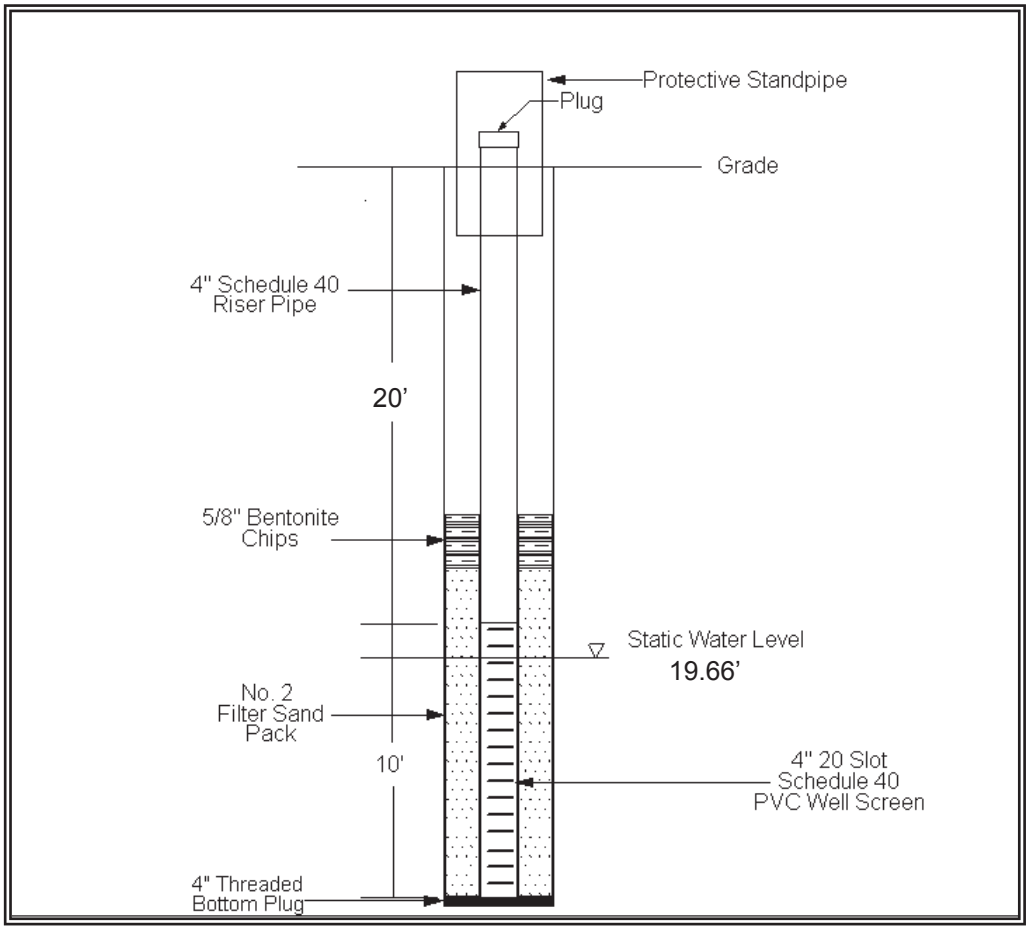

| GEOLOGIC LOG<br>HydroEnvironmental SOLUTIONS, INC. | **OWNER**: Bilwin Development Affiliates, LLC<br>**WELL NO.:** MW-5<br>**PAGE** 1 **OF** 1 **PAGES** |
|---|---|
| **SITE LOCATION**: 109-125 Marbledale Road<br>Tuckahoe, New York<br>BCP Site #C360143 | **SCREEN SIZE & TYPE:** 4" Schedule 40 PVC<br>**SLOT NO.:** 020 **SETTING**: 36.0 - 26.0 ftbg |
| **DATE COMPLETED**: March 10, 2015 | **SAND PACK SIZE & TYPE:** No. 2 filter sand |
| **DRILLING COMPANY**: SoilTesting, Inc.<br>Oxford, Connecticut | **SETTING:** 36.0 – 24.0 ftbg<br>**CASING SIZE & TYPE:** 4" Schedule 40 PVC |
| **DRILLING METHOD**: Diedrich D120 7.25" HSA | **SETTING:** 26.0 ftbg – 3.0 ft above grade |
| **SAMPLING METHOD**: | **SEAL TYPE:** 5/8" Bentonite chips |
| **OBSERVER**: REG | **SETTING:** 24.0 – 22.0 ftbg |
| **REFERENCE POINT (RP)**: Grade | **BACKFILL TYPE**: Cuttings |
| **ELEVATION OF RP**: | **STATIC WATER LEVEL**: 27.66 ftbg |
| **STICK-UP**: 3 feet | **DEVELOPMENT METHOD**: |
| **SURFACE COMPLETION**: Steel casing | **DURATION**: – **YIELD**: – |
| **NOTES:** Completed using Air Rotary | |

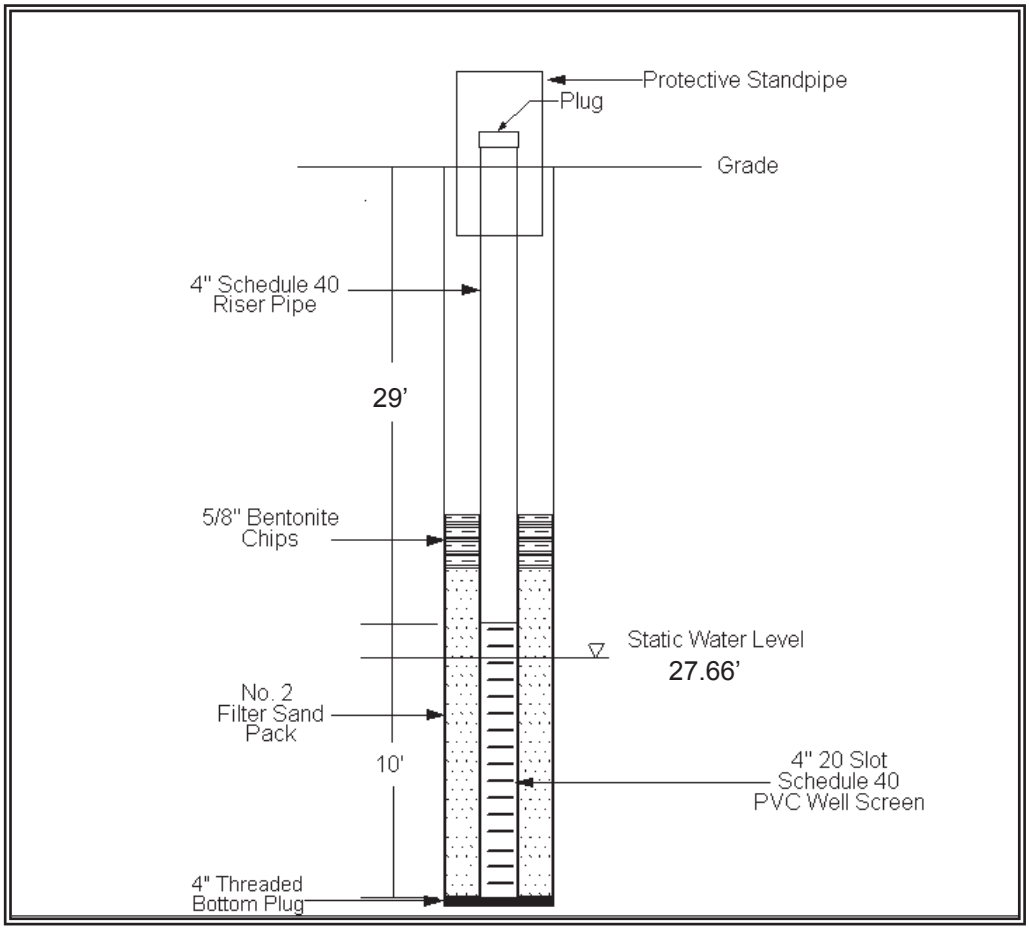

| GEOLOGIC LOG<br>HydroEnvironmental SOLUTIONS, INC. | **OWNER**: Bilwin Development Affiliates, LLC<br>**WELL NO.:** MW-6<br>**PAGE** 1 **OF** 1 **PAGES** |
|---|---|
| **SITE LOCATION**: 109-125 Marbledale Road<br>Tuckahoe, New York<br>BCP Site #C360143 | **SCREEN SIZE & TYPE:** 10 feet 4" Schedule 40 PVC<br>**SLOT NO.:** 020 **SETTING**: 30.0 - 20.0 ftbg |
| **DATE COMPLETED**: April 16, 2015 | **SAND PACK SIZE & TYPE:** No. 2 filter sand<br>**SETTING:** 30.0 – 18.0 ftbg |
| **DRILLING COMPANY**: SoilTesting, Inc.<br>Oxford, Connecticut | **CASING SIZE & TYPE:** 20 feet 4" Schedule 40 PVC |
| **DRILLING METHOD**: Diedrich D120 7.25" HSA | **SETTING:** 20.0 – 0 ftbg |
| **SAMPLING METHOD**: | **SEAL TYPE:** 5/8" Bentonite chips |
| **OBSERVER**: REG | **SETTING:** 20.0 – 18.0 ftbg |
| **REFERENCE POINT (RP)**: Grade | **BACKFILL TYPE**: Cuttings |
| **ELEVATION OF RP**: | **STATIC WATER LEVEL**: 21.87 ftbg |
| **STICK-UP**: 0 feet | **DEVELOPMENT METHOD**: |
| **SURFACE COMPLETION**: Steel casing | **DURATION**: – **YIELD**: – |
| **NOTES:** | |

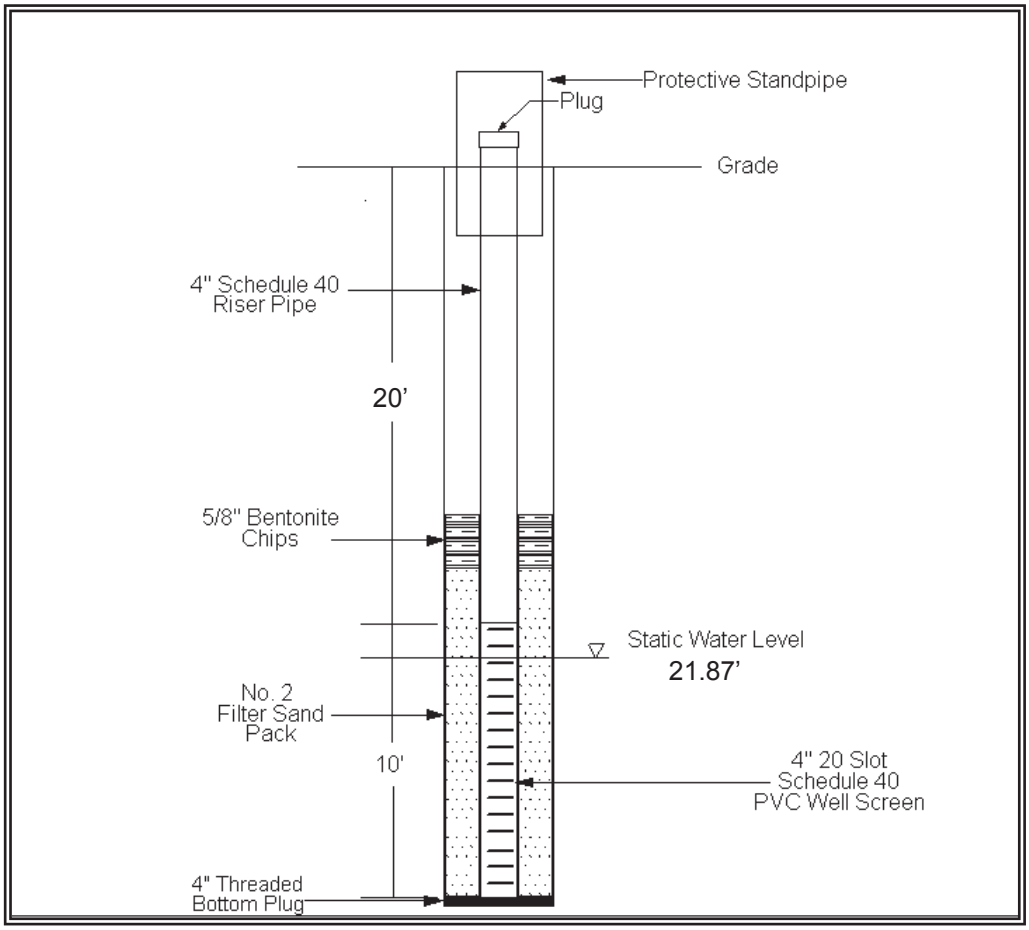

| GEOLOGIC LOG<br>HydroEnvironmental SOLUTIONS, INC. | **OWNER**: Bilwin Development Affiliates, LLC<br>**WELL NO.:** MW-7<br>**PAGE** 1 **OF** 1 **PAGES** |
|---|---|
| **SITE LOCATION**: 109-125 Marbledale Road<br>Tuckahoe, New York<br>BCP Site #C360143 | **SCREEN SIZE & TYPE:** 10 feet 4" Schedule 40 PVC<br>**SLOT NO.:** 020 **SETTING**: 35.0 - 25.0 ftbg |
| **DATE COMPLETED**: April 17, 2015 | **SAND PACK SIZE & TYPE:** No. 2 filter sand |
| **DRILLING COMPANY**: SoilTesting, Inc.<br>Oxford, Connecticut | **SETTING:** 35.0 – 23.0 ftbg<br>**CASING SIZE & TYPE:** 27.5 feet 4" Schedule 40 PVC |
| **DRILLING METHOD**: Diedrich D120 7.25" HSA | **SETTING:** 25.0 ftbg – 2.5 ft above grade |
| **SAMPLING METHOD**: | **SEAL TYPE:** 5/8" Bentonite chips |
| **OBSERVER**: REG | **SETTING:** 23.0 – 21.0 ftbg |
| **REFERENCE POINT (RP)**: Grade | **BACKFILL TYPE**: Cuttings |
| **ELEVATION OF RP**: | **STATIC WATER LEVEL**: 31.72 ftbg |
| **STICK-UP**: 2.5 feet | **DEVELOPMENT METHOD**: |
| **SURFACE COMPLETION**: Steel casing | **DURATION**: – **YIELD**: – |
| **NOTES:** | |

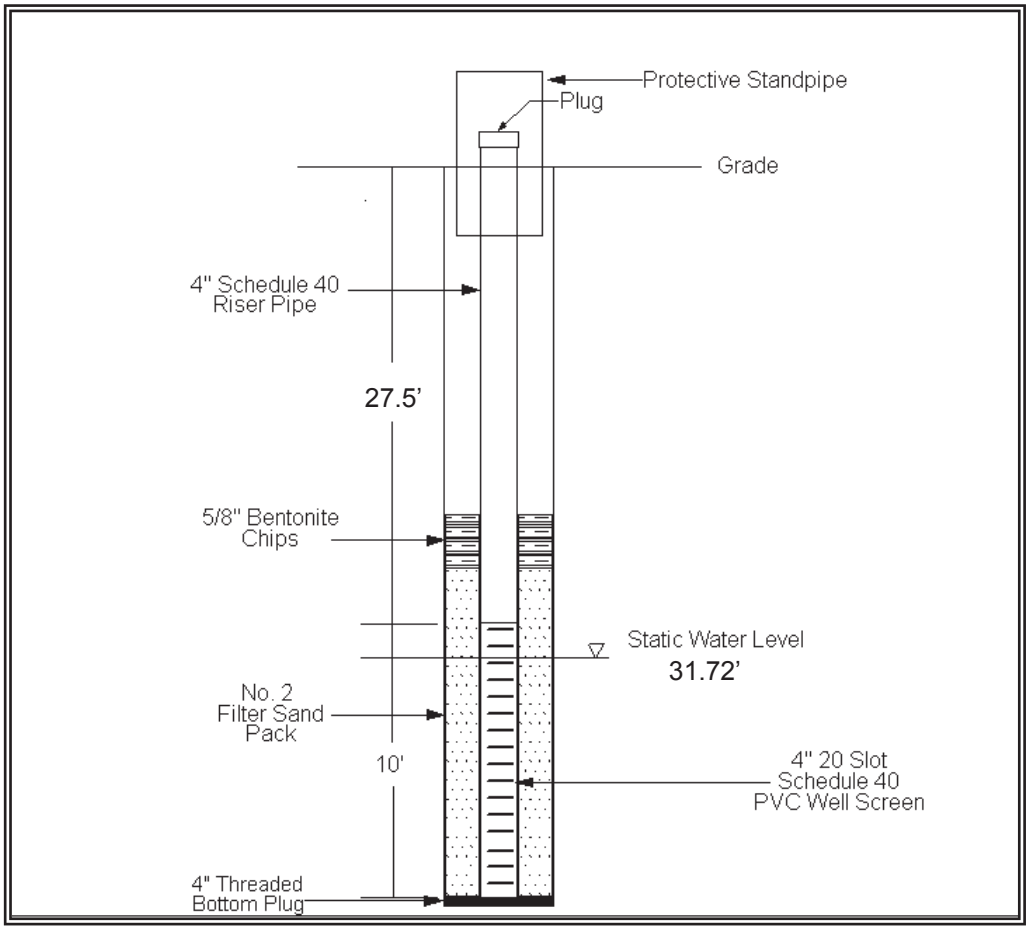

| GEOLOGIC LOG<br>HydroEnvironmental SOLUTIONS, INC. | **OWNER**: Bilwin Development Affiliates, LLC<br>**WELL NO.:** MW-8<br>**PAGE** 1 **OF** 1 **PAGES** |
|---|---|
| **SITE LOCATION**: 109-125 Marbledale Road<br>Tuckahoe, New York<br>BCP Site #C360143 | **SCREEN SIZE & TYPE:** 4-inch Schedule 40 PVC<br>**SLOT NO.:** 020 **SETTING**: 36.0 – 26.0 ftbg |
| **DATE COMPLETED**: March 6, 2015 | **SAND PACK SIZE & TYPE:** No.2 filter sand |
| **DRILLING COMPANY**: SoilTesting, Inc.<br>Oxford, Connecticut | **SETTING:** 36.0 – 24.0 ftbg<br>**CASING SIZE & TYPE:** 4-inch Schedule 40 PVC |
| **DRILLING METHOD**: Diedrich D120 7.25" HSA and Air Rotary | **SETTING:** 24.0 ftbg – 4.0 ft above grade |
| **SAMPLING METHOD**: | **SEAL TYPE:** Bentonite chips |
| **OBSERVER**: REG | **SETTING:** 24.0 – 22.0 ftbg |
| **REFERENCE POINT (RP)**: Grade | **BACKFILL TYPE**: Clean cuttings |
| **ELEVATION OF RP**: | **STATIC WATER LEVEL**: 23.12 ftbg |
| **STICK-UP**: 4 feet | **DEVELOPMENT METHOD**: |
| **SURFACE COMPLETION**: Steel casing | **DURATION**: – **YIELD**: – |
| **NOTES:** | |

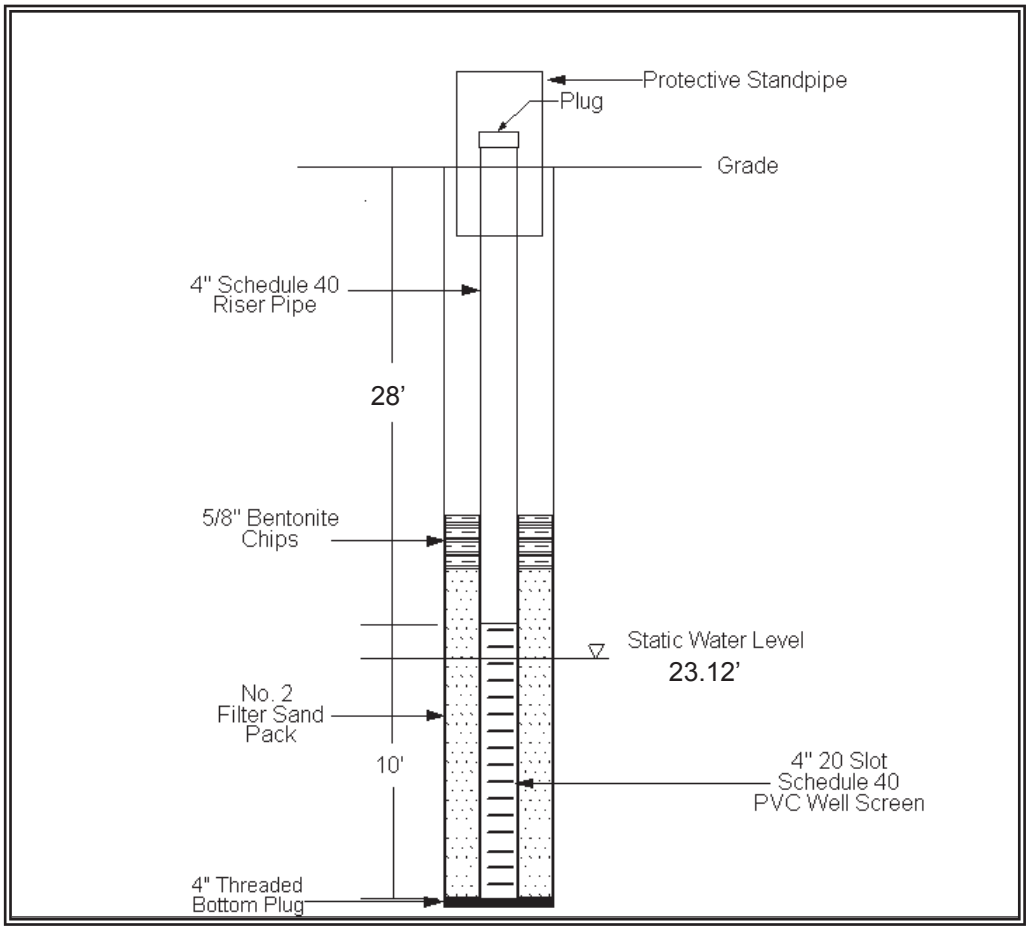

| GEOLOGIC LOG<br>HydroEnvironmental SOLUTIONS, INC. | **OWNER**: Bilwin Development Affiliates, LLC<br>**WELL NO.:** MW-9<br>**PAGE** 1 **OF** 1 **PAGES** |
|---|---|
| **SITE LOCATION**: 109-125 Marbledale Road<br>Tuckahoe, New York<br>BCP Site #C360143 | **SCREEN SIZE & TYPE:** 4-inch Schedule 40 PVC<br>**SLOT NO.:** 020 **SETTING**: 25 – 15 ftbg |
| **DATE COMPLETED**: April 17, 2015 | **SAND PACK SIZE & TYPE:** No.2 filter sand |
| **DRILLING COMPANY**: SoilTesting, Inc.<br>Oxford, Connecticut | **SETTING:** 25 – 13 ftbg<br>**CASING SIZE & TYPE:** 4-inch Schedule 40 PVC |
| **DRILLING METHOD**: Diedrich D120 7.25" HSA | **SETTING:** 15 ftbg – 3 ft above grade |
| **SAMPLING METHOD**: | **SEAL TYPE:** Bentonite chips |
| **OBSERVER**: REG | **SETTING:** 13 – 11 ftbg |
| **REFERENCE POINT (RP)**: Grade | **BACKFILL TYPE**: Clean cuttings |
| **ELEVATION OF RP**: | **STATIC WATER LEVEL**: 17.99 ftbg |
| **STICK-UP**: 3 feet | **DEVELOPMENT METHOD**: |
| **SURFACE COMPLETION**: Steel casing | **DURATION**: – **YIELD**: – |
| **NOTES:** | |

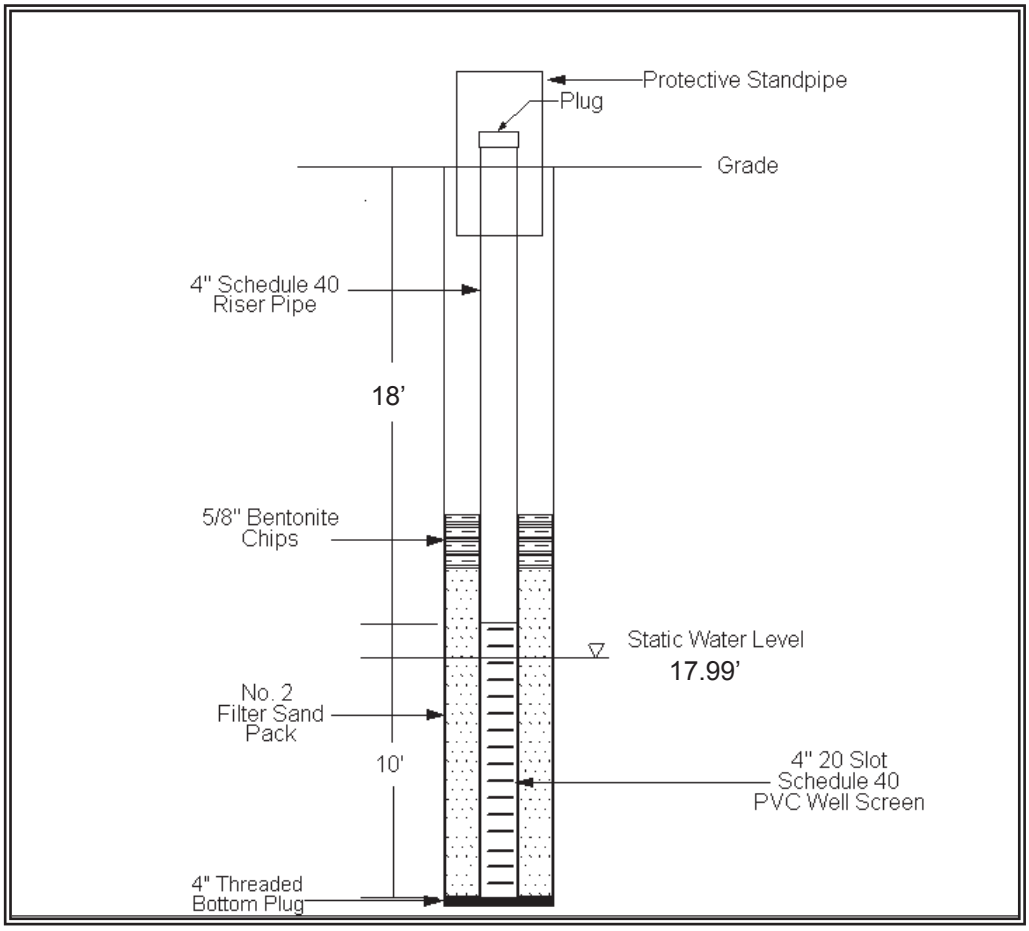

| GEOLOGIC LOG<br>HydroEnvironmental SOLUTIONS, INC. | **OWNER**: Bilwin Development Affiliates, LLC<br>**WELL NO.:** TB-1<br>**PAGE** 1 **OF** 2 **PAGES** |
|---|---|
| **SITE LOCATION**: 109-125 Marbledale Road<br>Tuckahoe, New York<br>BCP Site #C360143 | **SCREEN SIZE & TYPE:** None<br>**SLOT NO.:** **SETTING**: |
| **DATE COMPLETED**: April 15, 2015 | **SAND PACK SIZE & TYPE:** None<br>**SETTING:** |
| **DRILLING COMPANY**: SoilTesting, Inc.<br>Oxford, Connecticut | **CASING SIZE & TYPE:** None |
| **DRILLING METHOD**: Diedrich D120 4.25" HSA | **SETTING:** |
| **SAMPLING METHOD**: 2.25" Split Spoon | **SEAL TYPE:** None |
| **OBSERVER**: REG | **SETTING:** |
| **REFERENCE POINT (RP)**: Grade | **BACKFILL TYPE**: Portland and bentonite slurry |
| **ELEVATION OF RP**: | **STATIC WATER LEVEL**: |
| **STICK-UP**: | **DEVELOPMENT METHOD**: |
| **SURFACE COMPLETION**: | **DURATION**: – **YIELD**: – |
| **NOTES:** | |
| **ABBREVIATIONS: SS = split spoon W = wash C = cuttings G = grab ST = shelby tube**<br>**REC = Recovery PPM = parts per million ftbg = feet below grade MC = macro core sampler** | |

| DEPTH (FEET) | | SAMPLE TYPE | BLOW COUNT | REC. (FEET) | PID READING (PPM) | DESCRIPTION |
|---|---|---|---|---|---|---|
| FROM | TO | | | | | |
| 0 | 2 | SS | 2-4-12-15 | 1.0 | 3.7 | Medium dense SAND (fine), SILT, trace weathered rock; brown; moist; no hydrocarbon odor |
| 2 | 4 | SS | 12-15-18-20 | 1.0 | 3.9 | Dense SAND (fine), SILT, trace weathered rock, glass; brown; moist; no hydrocarbon odor |
| 4 | 6 | SS | 6-6-4-4 | 0.75 | 3.2 | Loose SAND (fine), some SILT, trace weathered rock; brown; moist; no hydrocarbon odor |
| 6 | 8 | SS | 3-3-2-3 | 0.25 | 3.5 | Loose SAND (fine to medium) and SILT, glass, wood; black; wet; no hydrocarbon odor |
| 8 | 10 | SS | 10-18-14-18 | 0.25 | 4.3 | Dense SAND (fine to medium), SILT, glass; brown; wet; no hydrocarbon odor |
| 10 | 12 | SS | 7-12-13-11 | 1.1 | 5.8 | Medium dense SAND (fine to coarse), SILT; black to brown; wet; no hydrocarbon odor |
| 12 | 14 | SS | 9-5-3-5 | 0.9 | 3.6 | Loose SAND (fine to medium), some GRAVEL (coarse, round), trace metal; brown; dry; no hydrocarbon odor |
| 14 | 16 | SS | 24-18-10-6 | 0.9 | 2.7 | Medium dense SSAND (fine to medium), trace GRAVEL (fine, rounded), glass; black; dry; no hydrocarbon odor |
| 16 | 18 | SS | 5-2-6-3 | 0 | --- | No recovery |
| 18 | 20 | SS | 5-8-8-9 | 0.8 | 3.8 | Medium dense SAND (fine to medium), trace SILT, trace GRAVEL (fine, rounded), metal; black; dry; no hydrocarbon odor |
| 20 | 22 | SS | 6-2-2-1 | 0.4 | 2.3 | Very loose SAND (fine to coarse), some GRAVEL (fine to coarse, rounded), trace SILT, glass; black; wet; no hydrocarbon odor |
| 22 | 24 | SS | 1/12-1/12 | 0.7 | 2.0 | Very loose SAND (fine to coarse), trace SILT, wood, glass; black; wet; no hydrocarbon odor |
| 24 | 26 | SS | 1/12-3-7 | 0.3 | 1.1 | Very loose SAND (fine to coarse), trace SILT, glass, brick; black; wet; no hydrocarbon odor |

**OWNER**: Bilwin Development Affiliates, LLC

**WELL NO.:** TB-1 **PAGE:** 2 OF 2 PAGES

| DEPTH (FEET) | | SAMPLE TYPE | BLOW COUNT | REC. (FEET) | PID READING (PPM) | DESCRIPTION |
|---|---|---|---|---|---|---|
| FROM | TO | | | | | |
| 26 | 28 | SS | 5-2-1-5 | 1.0 | 3.5 | Very loose SAND (fine to medium), trace SILT, brick, glass; black; wet; no hydrocarbon odor |
| 28 | 30 | SS | 14-13-11-20 | 1.0 | 3.7 | Medium dense SAND (fine to medium), trace GRAVEL (fine to coarse, rounded), glass, wood; black; wet; no hydrocarbon odor |
| 30 | 32 | SS | 7-4-3-5 | 0.8 | 3.6 | Loose SAND (fine to medium), trace SILT, trace GRAVEL (fine to coarse, rounded), wood, plastic; black; wet; no hydrocarbon odor |
| 32 | 34 | SS | 6-27-17-14 | 2.0 | 1.7 | Dense SAND (fine to medium), trace SILT, trace GRAVEL (fine to coarse, rounded), wood; black; wet; no hydrocarbon odor |
| 34 | 36 | SS | 13-11-10-7 | 1.0 | 7.1 | Medium dense SAND (fine to medium), SILT, trace GRAVEL ( fine to medium); black; wet; no hydrocarbon odor |
| 36 | 38 | SS | 12-20-22-10 | 1.0 | 4.1 | Dense SAND (fine to medium), SILT, trace GRAVEL (fine to medium, rounded); black; wet; no hydrocarbon odor |
| 38 | 40 | SS | 5-3-4-5 | 0.2 | 1.8 | Loose SAND (fine to medium), SILT, glass, plastic; black; wet; no hydrocarbon odor |
| 40 | 42 | SS | 8-7-6-5 | 0.2 | 5.2 | Medium dense SAND (fine to medium), SILT, glass, plastic; black; wet; no hydrocarbon odor |
| 42 | 44 | SS | 8-4-4-4 | 0.2 | 4.7 | Loose SAND (fine to medium), SILT, glass; black; wet; no hydrocarbon odor |
| 44 | 46 | SS | 9-2-2-6 | 1.0 | 1.2 | Very loose SAND (fine to medium), trace SILT, trace GRAVEL (fine to medium, rounded), glass, brick; black; wet; no hydrocarbon odor |
| 46 | 48 | SS | 12-20-13-13 | 1.4 | 1.7 | Dense SAND (fine to medium), trace SILT, trace GRAVEL (fine to medium, rounded), weathered rock, glass, brick; black to white; wet; no hydrocarbon odor |
| 48 | 50 | SS | 7-6-7-14 | 2.0 | 2.4 | Dense SAND (fine to medium), trace SILT, trace GRAVEL (fine to medium, rounded), weathered rock, glass, brick; black to white; wet; no hydrocarbon odor |
| 50 | 52 | SS | 100/1 | 1.0 | 2.7 | Very dense weathered rock; white; wet; no hydrocarbon odor |
| | | | | | | |
| | | | | | | Refusal at 51.0 ftbg |

| GEOLOGIC LOG<br>HydroEnvironmental SOLUTIONS, INC. | **OWNER**: Bilwin Development Affiliates, LLC<br>**WELL NO.:** TB-2<br>**PAGE** 1 **OF** 2 **PAGES** |
|---|---|
| **SITE LOCATION**: 109-125 Marbledale Road<br>Tuckahoe, New York<br>BCP Site #C360143 | **SCREEN SIZE & TYPE:** None<br>**SLOT NO.:** **SETTING**: |
| **DATE COMPLETED**: April 15, 2015 | **SAND PACK SIZE & TYPE:** None<br>**SETTING:** |
| **DRILLING COMPANY**: SoilTesting, Inc.<br>Oxford, Connecticut | **CASING SIZE & TYPE:** None |
| **DRILLING METHOD**: Diedrich D120 4.25" HSA | **SETTING:** |
| **SAMPLING METHOD**: 2.25" Split Spoon | **SEAL TYPE:** None |
| **OBSERVER**: REG | **SETTING:** |
| **REFERENCE POINT (RP)**: Grade | **BACKFILL TYPE**: Portland and bentonite slurry |
| **ELEVATION OF RP**: | **STATIC WATER LEVEL**: |
| **STICK-UP**: | **DEVELOPMENT METHOD**: |
| **SURFACE COMPLETION**: | **DURATION**: – **YIELD**: – |
| **NOTES:** | |
| **ABBREVIATIONS: SS = split spoon W = wash C = cuttings G = grab ST = shelby tube**<br>**REC = Recovery PPM = parts per million ftbg = feet below grade MC = macro core sampler** | |

| DEPTH (FEET) | | SAMPLE TYPE | BLOW COUNT | REC. (FEET) | PID READING (PPM) | DESCRIPTION |
|---|---|---|---|---|---|---|
| FROM | TO | | | | | |
| 0 | 2 | SS | 4-26-39-40 | 2 | 5.1 | Very dense topsoil, SAND (fine to medium), SILT, weathered rock; brown; dry; no hydrocarbon odor |
| 2 | 4 | SS | 35-26-25-17 | 1.0 | 35.0 | Very dense SAND (fine to medium), SILT, weathered rock, ash, glass; brown to black; dry; moderate fuel oil odor |
| 4 | 6 | SS | 8-7-11-42 | 0.25 | 3.5 | Medium dense SAND (fine to medium), SILT, weathered rock, ash, glass; brown to black; dry; no hydrocarbon odor |
| 6 | 8 | SS | 64-29-7-8 | 0.25 | 1.8 | Dense SAND (fine to medium), SILT; brown; dry; no hydrocarbon odor |
| 8 | 10 | SS | 11-8-16-44 | 0.5 | 3.1 | Medium dense SAND (medium to coarse), trace SILT, glass, brick, wood; black; moist; no hydrocarbon odor |
| 10 | 12 | SS | 6-8-5-19 | 0 | --- | No recovery |
| 12 | 14 | SS | 48-37-14-10 | 0.25 | 2.3 | Very dense SAND (fine to medium), trace SILT; black; moist; no hydrocarbon odor |
| 14 | 16 | SS | 13-11-5-3 | 1.0 | 3.2 | Medium dense SAND (medium to coarse), some SILT, wood, weathered rock; black; moist; no hydrocarbon odor |
| 16 | 18 | SS | 2-4-17-11 | 0.5 | 2.9 | Medium dense SAND (medium to coarse), some SILT, wood, glass, weathered rock; black; moist; no hydrocarbon odor |
| 18 | 20 | SS | 35-50/1 | 1.0 | 6.7 | Very dense SAND (medium to coarse), some SILT, wood, glass grading to weathered rock; black to white; moist; no hydrocarbon odor |
| | | | | | | |
| | | | | | | Refusal at 19.0 ftbg |
| | | | | | | |

| GEOLOGIC LOG<br>HydroEnvironmental SOLUTIONS, INC. | **OWNER**: Bilwin Development Affiliates, LLC<br>**WELL NO.:** TB-3<br>**PAGE** 1 **OF** 1 **PAGES** |
|---|---|
| **SITE LOCATION**: 109-125 Marbledale Road<br>Tuckahoe, New York<br>BCP Site #C360143 | **SCREEN SIZE & TYPE:** None<br>**SLOT NO.:** **SETTING**: |
| **DATE COMPLETED**: March 3, 2015 | **SAND PACK SIZE & TYPE:** None<br>**SETTING:** |
| **DRILLING COMPANY**: SoilTesting, Inc.<br>Oxford, Connecticut | **CASING SIZE & TYPE:** None<br>**SETTING:** |
| **DRILLING METHOD**: Diedrich D50M 4.25" HSA | |
| **SAMPLING METHOD**: 2.25" Split Spoon | **SEAL TYPE:** None<br>**SETTING:** |
| **OBSERVER**: REG | |
| **REFERENCE POINT (RP)**: Grade | **BACKFILL TYPE**: Portland and bentonite slurry |
| **ELEVATION OF RP**: | **STATIC WATER LEVEL**: |
| **STICK-UP**: | **DEVELOPMENT METHOD**: |
| **SURFACE COMPLETION**: | **DURATION**: – **YIELD**: – |
| **NOTES:** | |
| **ABBREVIATIONS: SS = split spoon W = wash C = cuttings G = grab ST = shelby tube**<br>**REC = Recovery PPM = parts per million ftbg = feet below grade MC = macro core sampler** | |

| DEPTH (FEET) | | SAMPLE TYPE | BLOW COUNT | REC. (FEET) | PID READING (PPM) | DESCRIPTION |
|---|---|---|---|---|---|---|
| FROM | TO | | | | | |
| 0 | 2 | SS | 22-18-13-12 | 1.0 | 1.7 | Dense topsoil, SAND (medium to coarse), GRAVEL (fine, subangular); brown; dry; no hydrocarbon odor |
| 2 | 4 | SS | 8-6-3-4 | 0.5 | 16.6 | Loose SAND (medium to coarse), SILT; brown; dry; slight hydrocarbon and organic odor |
| 4 | 6 | SS | 4-4-3-5 | 0.75 | 2.9 | Loose SAND (fine), SILT, weathered rock; brown to tank; moist; no hydrocarbon odor |
| 6 | 8 | SS | 12-24-50/4 | 0.5 | 1.7 | Very dense SAND (fine to medium), SILT, weathered rock; brown; moist; no hydrocarbon odor |
| | | | | | | Refusal at 8 ftbg |
| | | | | | | |
| | | | | | | |
| | | | | | | |
| | | | | | | |
| | | | | | | |
| | | | | | | |
| | | | | | | |
| | | | | | | |
| | | | | | | |

# GEOLOGIC LOG

HydroEnvironmental SOLUTIONS, INC.

**OWNER**: Bilwin Development Affiliates, LLC

**WELL NO.:** TB-4



**SITE LOCATION**: 109-125 Marbledale Road
Tuckahoe, New York
BCP Site #C360143

**SCREEN SIZE & TYPE:** None

**SLOT NO.:** **SETTING**:

**DATE COMPLETED**: March 3, 2015

**SAND PACK SIZE & TYPE:** None

**SETTING:**

**DRILLING COMPANY**: SoilTesting, Inc.
Oxford, Connecticut

**CASING SIZE & TYPE:** None

**SETTING:**

**DRILLING METHOD**: Diedrich D50M 4.25" HSA

**SAMPLING METHOD**: 2.25" Split Spoon

**SEAL TYPE:** None

**SETTING:**

**OBSERVER**: DKS and REG

**REFERENCE POINT (RP)**: Grade

**BACKFILL TYPE**: Portland and bentonite slurry

**ELEVATION OF RP**:

**STATIC WATER LEVEL**:

**STICK-UP**:

**DEVELOPMENT METHOD**:

**SURFACE COMPLETION**:

**DURATION**: – **YIELD**: –

**NOTES:**

**ABBREVIATIONS: SS = split spoon W = wash C = cuttings G = grab ST = shelby tube**
**REC = Recovery PPM = parts per million ftbg = feet below grade MC = macro core sampler**

| DEPTH (FEET) | | SAMPLE TYPE | BLOW COUNT | REC. (FEET) | PID READING (PPM) | DESCRIPTION |
|---|---|---|---|---|---|---|
| FROM | TO | | | | | |
| 0 | 2 | SS | 20-18-34-30 | 1.5 | 0.4 | Very dense topsoil, SAND (fine), some GRAVEL (fine to medium, angular), trace wood' dark brown; moist; no hydrocarbon odor |
| 2 | 4 | SS | 50/5 | 0.5 | 1.1 | Very dense SAND (fine), trace GRAVEL (fine, angular); dark brown; moist; no hydrocarbon odor |
| 4 | 6 | SS | 7-10-10-16 | 1.75 | 5.2 | Medium dense SAND (fine), some GRAVEL (fine, angular), paper and historic fill; brown; moist; slight fuel oil odor |
| 6 | 8 | SS | 7-8-9-7 | 0.5 | 4.3 | Medium dense SAND (fine), SILT, trace GRAVEL (fine, angular), glass; brown; moist; slight fuel oil odor |
| 8 | 10 | SS | 7-8-8-6 | 1.0 | 8.6 | Medium dense SAND (fine), SILT, trace GRAVEL (fine, angular), glass; brown; moist; slight fuel oil odor |
| 10 | 12 | SS | 2-6-4-6 | 1.0 | 4.7 | Loose SAND (fine), SILT, CLAY, glass; brown; moist; slight fuel oil odor |
| 12 | 14 | SS | 8-50/0 | 0.75 | 3.0 | Very dense SAND (fine), SILT, wood; brown; moist; no hydrocarbon odor |
| 14 | 16 | SS | 21-4-12-45 | 0.5 | 2.7 | Medium dense SAND (fine), SILT, wood; brown; moist; no hydrocarbon odor |
| 16 | 18 | SS | 8-15-18-12 | 0.5 | 2.0 | Dense SAND (fine to medium), SILT, some GRAVEL (fine, subangular), brown; moist; no hydrocarbon odor |
| 18 | 20 | SS | 8-8-8-8 | 0.35 | 1.4 | Dense charred wood; black and tan; dry; slight organic odor |
| 20 | 22 | SS | 7-21-9-11 | 0.5 | 19.1 | Medium dense SAND (fine), SILT, some GRAVEL (fine, angular), wood; brown; moist; slight odor |
| 22 | 24 | SS | 6-14-11-6 | 0.5 | 14.1 | Medium dense SAND (fine), SILT, some GRAVEL (fine, angular); brown; moist; slight hydrocarbon odor |
| 24 | 26 | SS | 8-7-10-12 | 1.0 | 22.7 | Medium denseSAND(fine), SILT, burnt debris/historic fill; brown; moist; slight hydrocarbon odor |

**OWNER**: Bilwin Development Affiliates, LLC

**WELL NO.:** TB-4 **PAGE:** 2 OF 2 PAGES

| DEPTH (FEET) | | SAMPLE TYPE | BLOW COUNT | REC. (FEET) | PID READING (PPM) | DESCRIPTION |
|---|---|---|---|---|---|---|
| FROM | TO | | | | | |
| 26 | 28 | SS | 12-18-34-45 | 1.0 | 16.2 | SAND (fine), SILT, wood, ash; brown to black; moist; slight hydrocarbon odor |
| 28 | 30 | SS | 12-23-34-18 | 1.5 | 6.6 | SAND (fine), charred debris, wood, ash; brown to black; moist; slight hydrocarbon odor |
| 30 | 32 | SS | 15-21-18-14 | 1.0 | 3.6 | SAND (fine), SILT, trace GRAVEL (fine, angular); brown to black; wet; no hydrocarbon odor |
| 32 | 34 | SS | 50/4 | 0.25 | 34.1 | SILT; dark brown to black; wet; strong fuel oil odor |
| | | | | | | |
| | | | | | | |
| | | | | | | Refusal at 34 ftbg |

| GEOLOGIC LOG<br>HydroEnvironmental SOLUTIONS, INC. | **OWNER**: Bilwin Development Affiliates, LLC<br>**WELL NO.:** TB-5<br>**PAGE** 1 **OF** 1 **PAGES** |
|---|---|
| **SITE LOCATION**: 109-125 Marbledale Road<br>Tuckahoe, New York<br>BCP Site #C360143 | **SCREEN SIZE & TYPE:** None<br>**SLOT NO.:** **SETTING**: |
| **DATE COMPLETED**: March 11, 2015 | **SAND PACK SIZE & TYPE:** None<br>**SETTING:** |
| **DRILLING COMPANY**: SoilTesting, Inc.<br>Oxford, Connecticut | **CASING SIZE & TYPE:** None<br>**SETTING:** |
| **DRILLING METHOD**: Diedrich D50M 4.25" HSA | |
| **SAMPLING METHOD**: 2.25" Split Spoon | **SEAL TYPE:** None<br>**SETTING:** |
| **OBSERVER**: REG | |
| **REFERENCE POINT (RP)**: Grade | **BACKFILL TYPE**: Portland and bentonite slurry |
| **ELEVATION OF RP**: | **STATIC WATER LEVEL**: |
| **STICK-UP**: | **DEVELOPMENT METHOD**: |
| **SURFACE COMPLETION**: | **DURATION**: – **YIELD**: – |
| **NOTES:** | |
| **ABBREVIATIONS: SS = split spoon W = wash C = cuttings G = grab ST = shelby tube**<br>**REC = Recovery PPM = parts per million ftbg = feet below grade MC = macro core sampler** | |

| DEPTH (FEET) | | SAMPLE TYPE | BLOW COUNT | REC. (FEET) | PID READING (PPM) | DESCRIPTION |
|---|---|---|---|---|---|---|
| FROM | TO | | | | | |
| 0 | 2 | SS | 17-10-7-9 | 0.75 | 1.9 | Medium dense SAND (medium to coarse), SILT, brown; moist; no hydrocarbon odor |
| 2 | 4 | SS | 5-4-5-7 | 0.75 | 1.3 | Loose SAND (medium to coarse), SILT, trace GRAVEL (fine, subangular); brown; moist; no hydrocarbon odor |
| 4 | 6 | SS | 6-5-5-7 | 0.25 | 0.8 | Loose SAND (medium to coarse), SILT, trace GRAVEL (fine, subangular); brown; moist; no hydrocarbon odor |
| 6 | 8 | SS | 15-10-12-9 | 1.0 | 0.9 | Medium dense SAND (medium to coarse), SILT, weathered rock, concrete; brown to white; moist; no hydrocarbon odor |
| 8 | 10 | SS | - | - | - | Spoon refusal, augered through interval |
| 10 | 12 | SS | 5-7-8-9 | 0.25 | 3.0 | Medium dense SAND (medium to coarse), SILT, weathered rock; brown; wet; no hydrocarbon odor |
| 12 | 14 | SS | 4-5-7-17 | 1.0 | 3.2 | Medium dense weathered rock; white to gray; moist; no hydrocarbon odor |
| | | | | | | Refusal at 14.3 ftbg |
| | | | | | | |
| | | | | | | |
| | | | | | | |
| | | | | | | |
| | | | | | | |

| GEOLOGIC LOG<br>HydroEnvironmental SOLUTIONS, INC. | **OWNER**: Bilwin Development Affiliates, LLC<br>**WELL NO.:** TB-6<br>**PAGE** 1 **OF** 3 **PAGES** |
|---|---|
| **SITE LOCATION**: 109-125 Marbledale Road<br>Tuckahoe, New York<br>BCP Site #C360143 | **SCREEN SIZE & TYPE:** None<br>**SLOT NO.:** **SETTING**: |
| **DATE COMPLETED**: April 16 and 17, 2015 | **SAND PACK SIZE & TYPE:** None |
| **DRILLING COMPANY**: SoilTesting, Inc.<br>Oxford, Connecticut | **SETTING:** |
| | **CASING SIZE & TYPE:** None |
| **DRILLING METHOD**: Diedrich D120 4.25" HSA | **SETTING:** |
| **SAMPLING METHOD**: 2.25" Split Spoon | **SEAL TYPE:** None |
| **OBSERVER**: REG | **SETTING:** |
| **REFERENCE POINT (RP)**: Grade | **BACKFILL TYPE**: Portland and bentonite slurry |
| **ELEVATION OF RP**: | **STATIC WATER LEVEL**: |
| **STICK-UP**: | **DEVELOPMENT METHOD**: |
| **SURFACE COMPLETION**: | **DURATION**: – **YIELD**: – |
| **NOTES:** | |
| **ABBREVIATIONS: SS = split spoon W = wash C = cuttings G = grab ST = shelby tube**<br>**REC = Recovery PPM = parts per million ftbg = feet below grade MC = macro core sampler** | |

| DEPTH (FEET) | | SAMPLE TYPE | BLOW COUNT | REC. (FEET) | PID READING (PPM) | DESCRIPTION |
|---|---|---|---|---|---|---|
| FROM | TO | | | | | |
| 0 | 2 | SS | 6-12-20-31 | 1.7 | 5.2 | Dense SAND (fine to medium), trace SILT, trace GRAVEL (fine to medium, rounded); brown; dry; no hydrocarbon odor |
| 2 | 4 | SS | 55-48-47-59 | 2.0 | 3.5 | Very dense SAND (fine to medium), trace SILT, trace GRAVEL (fine to medium, rounded); brown; dry; no hydrocarbon odor |
| 4 | 6 | SS | 30-36-27-23 | 1.5 | 5.8 | Very dense SAND (fine), some SILT, weathered rock, glass, brick, wood; brown; dry; no hydrocarbon odor |
| 6 | 8 | SS | 24-18-14-10 | 1.1 | 6.1 | Dense SAND (fine), some SILT, trace GRAVEL (fine, rounded), ash, glass; brown to black; dry; no hydrocarbon odor |
| 8 | 10 | SS | 6-3-2-2 | 0.3 | 3.0 | Loose SAND (fine), some SILT, glass, metal; brown; dry; no hydrocarbon odor |
| 10 | 12 | SS | 1-3-2-5 | 0.7 | 4.3 | Loose SAND (fine to medium), GRAVEL (fine, subangular), glass, wood; dark brown; dry; no hydrocarbon odor |
| 12 | 14 | SS | 4-4-5-3 | 0.25 | 3.5 | Loose SAND (fine to medium), GRAVEL (fine, subangular), glass, wood; dark brown; dry; no hydrocarbon odor |
| 14 | 16 | SS | 2-5-5-5 | 0.75 | 2.3 | Loose SAND (fine to medium), GRAVEL (fine, subangular), glass, wood; dark brown; dry; no hydrocarbon odor |
| 16 | 18 | SS | 5-6-9-20 | 0.75 | 5.3 | Medium dense SAND (fine to medium), trace SILT, wood, glass; brown; dry; slight fuel oil odor |
| 18 | 20 | SS | 11-5-4-13 | 0 | --- | No recovery |
| 20 | 22 | SS | 9-15-15-8 | 0.3 | 2.9 | Dense SAND (fine to medium), trace SILT, trace GRAVEL (fine, rounded); brown; moist; no hydrocarbon odor |
| 22 | 24 | SS | 10-13-12-11 | 0.2 | 4.5 | Medium dense SAND (fine to medium), trace SILT, glass, copper wire; brown; moist; no hydrocarbon odor |
| 24 | 26 | SS | 8-11-4-3 | 1.0 | 3.6 | Medium dense SAND (fine to medium), SILT, trace GRAVEL (fine, rounded); brown; moist; no hydrocarbon odor |

**OWNER**: Bilwin Development Affiliates, LLC

**WELL NO.:** TB-6 **PAGE:** 2 OF 3 PAGES

| DEPTH (FEET) | | SAMPLE TYPE | BLOW COUNT | REC. (FEET) | PID READING (PPM) | DESCRIPTION |
|---|---|---|---|---|---|---|
| FROM | TO | | | | | |
| 26 | 28 | SS | 9-11-11-11 | 1.4 | 1.0 | Medium dense SAND (fine to medium), metal, wood, brick, grading to SAND (fine), trace SILT; moist to wet; brown to gray; no hydrocarbon odor |
| 28 | 30 | SS | 9-8-9-16 | 1.2 | 2.0 | Medium dense SAND (fine to coarse), trace SILT, trace GRAVEL (fine, rounded), glass, brick; brown; wet; no hydrocarbon odor |
| 30 | 32 | SS | 27-25-8-10 | 0.5 | 5.2 | Dense SAND (fine to coarse), trace SILT, trace GRAVEL (fine, rounded), metal, glass, brick; brown; wet; no hydrocarbon odor |
| 32 | 34 | SS | 8-5-6-6 | 0.3 | 2.5 | Medium dense SAND (fine to coarse), trace SILT, trace GRAVEL (fine, rounded), glass, brick; brown; wet; no hydrocarbon odor |
| 34 | 36 | SS | 8-6-6-21 | 0.5 | 4.0 | Medium dense SAND (fine to medium), trace SILT, glass; brown; wet; no hydrocarbon odor |
| 36 | 38 | SS | 17-10-13-13 | 0.5 | 5.4 | Medium dense SAND (fine to medium), trace SILT, trace GRAVEL (fine to medium, rounded), metal, glass; brown; wet; no hydrocarbon odor |
| 38 | 40 | SS | 17-14-14-13 | 0.6 | 3.7 | Medium dense SAND (fine to medium), trace SILT, trace GRAVEL (fine to medium, rounded), metal, glass; brown; wet; no hydrocarbon odor |
| 40 | 42 | SS | 12-12-25-14 | 0.25 | 5.9 | Dense SAND (fine to medium), trace GRAVEL (fine to medium, rounded), wood; brown; wet; no hydrocarbon odor |
| 42 | 44 | SS | 15-10-9-4 | 1.0 | 8.4 | Medium dense SAND (fine to medium), trace GRAVEL (fine to medium, rounded); brown; wet; slight hydrocarbon odor |
| 44 | 46 | SS | 6-5-4-3 | 0.1 | 5.8 | Loose wood; brown; wet; slight hydrocarbon odor |
| 46 | 48 | SS | 9-8-12-15 | 1.5 | 3.9 | Medium dense SAND (fine to medium), GRAVEL (fine to medium, subrounded), trace SILT, tile, wood, glass; brown; wet; no hydrocarbon odor |
| 48 | 50 | SS | 16-8-5-5 | 0.4 | 9.7 | Medium dense SAND (fine to medium), trace SILT, trace GRAVEL (fine, rounded), wood; brown; wet; slight hydrocarbon odor |
| 50 | 52 | SS | 2-2-3-5 | 0.6 | 4.0 | Loose SAND (fine to medium), trace SILT, trace GRAVEL (fine, rounded), wood, metal; brown; wet; slight hydrocarbon odor |
| 52 | 54 | SS | 3-10-10-9 | 1.2 | 88.8 | Medium dense SAND (fine to medium), trace SILT, trace GRAVEL (fine, rounded), wood, metal; brown; wet; slight hydrocarbon odor |
| 54 | 56 | SS | 10-11-8-16 | 0.6 | 1.9 | Medium dense SAND (fine to medium), trace SILT, trace GRAVEL (fine, rounded), wood, metal; brown; wet; slight hydrocarbon odor |
| 56 | 58 | SS | 16-24-14-22 | 0.5 | 286.7 | Dense SAND (fine to medium), trace GRAVEL (fine to medium, rounded), glass, metal, wood; black; wet; strong hydrocarbon odor |
| 58 | 60 | SS | 28-15-16-21 | 0.5 | 229.4 | Dense SAND (fine to medium), trace GRAVEL (fine to medium, rounded), glass, metal, wood; black; wet; strong hydrocarbon odor |
| 60 | 62 | SS | 1/6-5-6-13 | 0.8 | 15.6 | Medium dense SAND (fine to medium), SILT, CLAY, glass, wood, wire; black; wet; strong hydrocarbon odor |
| 62 | 64 | SS | 19-6-12-9 | 0.7 | 47.0 | Medium dense SAND (fine to medium), SILT, CLAY, glass, wood, wire; black; wet; strong hydrocarbon odor |
| 64 | 66 | SS | 14-11-7-15 | 0.4 | 15.8 | Medium dense SAND (fine), SILT, brick, glass; black; wet; moderate fuel oil odor |
| 66 | 68 | SS | 16-11-10-15 | 0.5 | 6.8 | Medium dense SAND (fine), SILT, brick, glass, metal; black; wet; moderate fuel oil odor |
| 68 | 70 | SS | 12-13-15-7 | 0.4 | 10.0 | Medium dense SAND (fine), SILT, trace CLAY, brick, glass; black; wet; moderate fuel oil odor |
| 70 | 72 | SS | 7-7-43-14 | 0.9 | 11.0 | Dense SAND (fine), SILT, trace CLAY, brick, glass; black; wet; moderate fuel oil odor |
| 72 | 74 | SS | 24-16-15-14 | 0.7 | 7.3 | Medium dense SAND (fine), SILT, trace CLAY, brick, glass; black; wet; moderate fuel oil odor |
| 74 | 76 | SS | 11-16-23-42 | 1.8 | 18.5 | Dense SAND (fine to medium), trace SILT, trace GRAVEL (fine to medium), glass, wood, metal; black; wet; slight hydrocarbon odor |

**OWNER**: Bilwin Development Affiliates, LLC

**WELL NO.:** TB-6 **PAGE:** 3 OF 3 PAGES

| DEPTH (FEET) | | SAMPLE TYPE | BLOW COUNT | REC. (FEET) | PID READING (PPM) | DESCRIPTION |
|---|---|---|---|---|---|---|
| FROM | TO | | | | | |
| 76 | 78 | SS | 10-14-16-15 | 2.0 | 8.6 | Dense SAND (fine to medium), trace SILT, trace GRAVEL (fine to medium), glass, wood, metal; black; wet; slight hydrocarbon odor |
| 78 | 80 | SS | 26-27-27-22 | 2.0 | 3.2 | Very dense SAND (fine to medium), trace SILT, trace GRAVEL (fine to medium), glass, wood, metal grading to weathered rock; black to white; wet; slight hydrocarbon odor |
| 80 | 82 | SS | 20-21-28-34 | 1.0 | 4.8 | Dense SAND (fine to medium), SILT grading to weathered rock; black to white; wet; no hydrocarbon odor |
| 82 | 84 | SS | 28-34-37-33 | 1.0 | 0.5 | Very dense weathered rock; white; wet; no hydrocarbon odor |
| 84 | 85 | SS | 18-35-100/3 | 1.4 | 0.6 | Very dense weathered rock; white; wet; no hydrocarbon odor |
| | | | | | | |
| | | | | | | Refusal at 85.0 ftbg |

| GEOLOGIC LOG<br>HydroEnvironmental SOLUTIONS, INC. | **OWNER**: Bilwin Development Affiliates, LLC<br>**WELL NO.:** TB-7<br>**PAGE** 1 **OF** 2 **PAGES** |
|---|---|
| **SITE LOCATION**: 109-125 Marbledale Road<br>Tuckahoe, New York<br>BCP Site #C360143 | **SCREEN SIZE & TYPE:** None<br>**SLOT NO.:** **SETTING**: |
| **DATE COMPLETED**: March 11, 2015 | **SAND PACK SIZE & TYPE:** None<br>**SETTING:** |
| **DRILLING COMPANY**: SoilTesting, Inc.<br>Oxford, Connecticut | **CASING SIZE & TYPE:** None<br>**SETTING:** |
| **DRILLING METHOD**: Diedrich D50M 4.25" HSA | |
| **SAMPLING METHOD**: 2.25" Split Spoon | **SEAL TYPE:** None<br>**SETTING:** |
| **OBSERVER**: REG | |
| **REFERENCE POINT (RP)**: Grade | **BACKFILL TYPE**: Portland and bentonite slurry |
| **ELEVATION OF RP**: | **STATIC WATER LEVEL**: |
| **STICK-UP**: | **DEVELOPMENT METHOD**: |
| **SURFACE COMPLETION**: | **DURATION**: – **YIELD**: – |
| **NOTES:** | |
| **ABBREVIATIONS: SS = split spoon W = wash C = cuttings G = grab ST = shelby tube**<br>**REC = Recovery PPM = parts per million ftbg = feet below grade MC = macro core sampler** | |

| DEPTH (FEET) | | SAMPLE TYPE | BLOW COUNT | REC. (FEET) | PID READING (PPM) | DESCRIPTION |
|---|---|---|---|---|---|---|
| FROM | TO | | | | | |
| 0 | 2 | SS | 4-7-50/0 | 0.5 | 1.3 | Very dense SAND (fine to medium), SILT; brown to black; moist; no hydrocarbon odor |
| 2 | 4 | - | - | - | - | Spoon refusal, augered through hinterval |
| 4 | 6 | SS | 21-18-7-8 | 1.0 | 1.4 | Medium dense SAND (medium to coarse), some SILT, weathered rock; brown and white; moist; no hydrocarbon odor |
| 6 | 8 | SS | 1-2-1-2 | 0.75 | 10.0 | Very loose glass, leaves; brown; moist; strong hydrocarbon odor |
| 8 | 10 | SS | 10-7-50/0 | 0.5 | 2.9 | Very dense SAND (fine to medium), SILT; brown; moist; no hydrocarbon odor- |
| 10 | 12 | SS | 10-10-50/0 | 1.0 | 3.7 | Very dense SAND (fine to medium), SILT, glass; brown; wet; no hydrocarbon odor |
| 12 | 14 | - | - | - | - | Spoon refusal, augered through interval |
| 14 | 15 | SS | 100/0 | 0.1 | 1.5 | Very dense tire; black wet; strong hydrocarbon odor |
| 15 | 17 | SS | 12-15-18-20 | 1.0 | 1.9 | Dense SAND (medium to coarse), SILT, plastic sheeting; brown; wet; strong organic odor |
| 17 | 19 | SS | 25-50/0 | 0.25 | 2.6 | Very dense SAND (fine to medium), weathered rock, leaves, plastic, wood; brown; wet; no hydrocarbon odor |
| 19 | 20 | - | - | - | - | Spoon refusal, augered through |
| 20 | 22 | SS | 1-3-3-4 | 0.25 | 3.4 | Loose SAND (fine to medium), SILT, wood, weathered rock; brown; wet; no hydrocarbon odor |
| 22 | 24 | SS | 4-4-9-50 | 0.5 | 4.6 | Medium dense SAND (fine to medium). SILT, weathered rock, plastic, paper; brown; wet; strong organic odor |

**OWNER**: Bilwin Development Affiliates, LLC

**WELL NO.:** TB-7 **PAGE:** 2 OF 2 PAGES

| DEPTH (FEET) | | SAMPLE TYPE | BLOW COUNT | REC. (FEET) | PID READING (PPM) | DESCRIPTION |
|---|---|---|---|---|---|---|
| FROM | TO | | | | | |
| 24 | 25 | - | - | - | - | Spoon refusal, augered through |
| 25 | 27 | SS | 25-30-22-21 | 0.25 | 2.1 | Very dense SILT, weathered rock; black; wet; strong unidentifiable odor |
| 27 | 29 | SS | 18-17-25-31 | 0.5 | 4.2 | Very dense SAND (medium), SILT, trace GRAVEL (fine, subrounded), weathered rock, glass, wood; dark brown; wet; strong solvent odor |
| | | | | | | Refusal at 29 ftbg |

| GEOLOGIC LOG<br>HydroEnvironmental SOLUTIONS, INC. | **OWNER**: Bilwin Development Affiliates, LLC<br>**WELL NO.:** TB-8<br>**PAGE** 1 **OF** 1 **PAGES** |
|---|---|
| **SITE LOCATION**: 109-125 Marbledale Road<br>Tuckahoe, New York<br>BCP Site #C360143 | **SCREEN SIZE & TYPE:** None<br>**SLOT NO.:** **SETTING**: |
| **DATE COMPLETED**: February 27, 2015 | **SAND PACK SIZE & TYPE:** None<br>**SETTING:** |
| **DRILLING COMPANY**: SoilTesting, Inc.<br>Oxford, Connecticut | **CASING SIZE & TYPE:** None |
| **DRILLING METHOD**: Diedrich D50M 4.25" HSA | **SETTING:** |
| **SAMPLING METHOD**: 2.25" Split Spoon | **SEAL TYPE:** None |
| **OBSERVER**: REG | **SETTING:** |
| **REFERENCE POINT (RP)**: Grade | **BACKFILL TYPE**: Portland and bentonite slurry |
| **ELEVATION OF RP**: | **STATIC WATER LEVEL**: |
| **STICK-UP**: | **DEVELOPMENT METHOD**: |
| **SURFACE COMPLETION**: | **DURATION**: – **YIELD**: – |
| **NOTES:** | |
| **ABBREVIATIONS: SS = split spoon W = wash C = cuttings G = grab ST = shelby tube**<br>**REC = Recovery PPM = parts per million ftbg = feet below grade MC = macro core sampler** | |

| DEPTH (FEET) | | SAMPLE TYPE | BLOW COUNT | REC. (FEET) | PID READING (PPM) | DESCRIPTION |
|---|---|---|---|---|---|---|
| FROM | TO | | | | | |
| 0 | 2 | SS | 12-14-19-20 | 1.0 | 3.2 | Dense SAND (fine to coarse), weathered rock, brick; brown; dry; no hydrocarbon odor |
| 2 | 4 | SS | 15-17-14-21 | 1.0 | 3.8 | Dense SAND (medium to coarse), weathered rock; brown; dry; no hydrocarbon odor |
| 4 | 6 | SS | 15-19-21-25 | 1.0 | 2.9 | Dense SAND (medium to coarse), weathered rock; brown; dry; no hydrocarbon odor |
| 6 | 8 | SS | 15-14-13-14 | 1.0 | 2.5 | Medium dense SAND (fine to coarse), SILT; brown; dry; no hydrocarbon odor |
| 8 | 10 | SS | 14-12-15-13 | 1.0 | 1.8 | Medium dense SAND (fine to medium), SILT, weathered rock; brown; moist; no hydrocarbon odor |
| 10 | 12 | SS | 8-10-12-9 | 1.0 | 1.8 | Medium dense SAND (fine), SILT, weathered rock; brown; moist; no hydrocarbon odor |
| 12 | 14 | SS | 12-9-10-10 | 1.25 | 0.9 | Medium dense SAND (fine), SILT, weathered rock; brown; moist; no hydrocarbon odor |
| 14 | 16 | SS | 9-12-13-10 | 1.5 | 1.6 | Dense SAND (fine) and SILT, grading to weathered marble; brown to white, moist; no hydrocarbon odor |
| 16 | 18 | SS | 7-8-9-12 | 1.0 | 1.3 | Medium dense SAND (fine) and SILT, weathered rock; brown to white; dry; no hydrocarbon odor |
| 18 | 20 | SS | 15-21-35-25 | 1.0 | 0.8 | Very dense weathered marble; white; dry; no hydrocarbon odor |
| 20 | 22 | SS | 25-35-50/4 | 1.0 | 2.0 | Very dense weathered marble; white; dry; no hydrocarbon odor |
| | | | | | | |
| | | | | | | Refusal at 23 ftbg |

| GEOLOGIC LOG<br>HydroEnvironmental SOLUTIONS, INC. | **OWNER**: Bilwin Development Affiliates, LLC<br>**WELL NO.:** TB-9<br>**PAGE** 1 **OF** 1 **PAGES** |
|---|---|
| **SITE LOCATION**: 109-125 Marbledale Road<br>Tuckahoe, New York<br>BCP Site #C360143 | **SCREEN SIZE & TYPE:** None<br>**SLOT NO.:** **SETTING**: |
| **DATE COMPLETED**: March 2, 2015 | **SAND PACK SIZE & TYPE:** None<br>**SETTING:** |
| **DRILLING COMPANY**: SoilTesting, Inc.<br>Oxford, Connecticut | **CASING SIZE & TYPE:** None |
| **DRILLING METHOD**: Diedrich D50M 4.25" HSA | **SETTING:** |
| **SAMPLING METHOD**: 2.25" Split Spoon | **SEAL TYPE:** None |
| **OBSERVER**: REG | **SETTING:** |
| **REFERENCE POINT (RP)**: Grade | **BACKFILL TYPE**: Portland and bentonite slurry |
| **ELEVATION OF RP**: | **STATIC WATER LEVEL**: |
| **STICK-UP**: | **DEVELOPMENT METHOD**: |
| **SURFACE COMPLETION**: | **DURATION**: – **YIELD**: – |
| **NOTES:** | |
| **ABBREVIATIONS: SS = split spoon W = wash C = cuttings G = grab ST = shelby tube**<br>**REC = Recovery PPM = parts per million ftbg = feet below grade MC = macro core sampler** | |

| DEPTH (FEET) | | SAMPLE TYPE | BLOW COUNT | REC. (FEET) | PID READING (PPM) | DESCRIPTION |
|---|---|---|---|---|---|---|
| FROM | TO | | | | | |
| 0 | 2 | SS | 15-18-24-22 | 0.5 | 0 | Dense SAND (fine to medium), trace GRAVEL (fine, angular); brown; moist; no hydrocarbon odor |
| 2 | 4 | SS | 34-25-27-28 | 0.5 | 0.1 | Very dense SAND (fine to medium), SILT, trace GRAVEL (fine, angular); brown; moist; no hydrocarbon odor |
| 5 | 7 | SS | 24-50/2 | 0.5 | 2.0 | Very dense SAND *fine to medium), SILT, trace GRAVEL (fine, angular), weathered rock; brown to gray; moist; no hydrocarbon odor |
| 7 | 9 | SS | 8-6-4-4 | 0.5 | 2.4 | Loose SAND (fine to medium), trace GRAVEL (fine, angular), weathered rock; brown; wet grading to dry; no hydrocarbon odor |
| 9 | 11 | SS | 24-8-50/4 | 0.5 | 1.8 | Very dense SAND (fine to medium), GRAVEL (fine, angular), charred wood, ash, brown to black, moist; no hydrocarbon odor |
| 11 | 13 | SS | 10-12-18-12 | 0.75 | 0.2 | Dense SAND (fine to medium), SILT, GRAVEL (fine, angular); brown; moist; no hydrocarbon odor |
| 13 | 15 | SS | 24-21-50/0 | 0.25 | 1.3 | Very dense SAND (fine to medium), SILT, GRAVEL (fine, angular); brown; moist; no hydrocarbon odor |
| 15 | 17 | - | - | - | - | - |
| | | | | | | |
| | | | | | | |
| | | | | | | Refusal at 16 ftbg |
| | | | | | | |
| | | | | | | |

| GEOLOGIC LOG<br>HydroEnvironmental SOLUTIONS, INC. | **OWNER**: Bilwin Development Affiliates, LLC<br>**WELL NO.:** TB-10<br>**PAGE** 1 **OF** 2 **PAGES** |
|---|---|
| **SITE LOCATION**: 109-125 Marbledale Road<br>Tuckahoe, New York<br>BCP Site #C360143 | **SCREEN SIZE & TYPE:** None<br>**SLOT NO.:** **SETTING**: |
| **DATE COMPLETED**: March 2 and 3, 2015 | **SAND PACK SIZE & TYPE:** None<br>**SETTING:** |
| **DRILLING COMPANY**: SoilTesting, Inc.<br>Oxford, Connecticut | **CASING SIZE & TYPE:** None |
| **DRILLING METHOD**: Diedrich D50M 4.25" HSA | **SETTING:** |
| **SAMPLING METHOD**: 2.25" Split Spoon | **SEAL TYPE:** None |
| **OBSERVER**: DKS and REG | **SETTING:** |
| **REFERENCE POINT (RP)**: Grade | **BACKFILL TYPE**: Portland and bentonite slurry |
| **ELEVATION OF RP**: | **STATIC WATER LEVEL**: |
| **STICK-UP**: | **DEVELOPMENT METHOD**: |
| **SURFACE COMPLETION**: | **DURATION**: – **YIELD**: – |
| **NOTES:** | |
| **ABBREVIATIONS: SS = split spoon W = wash C = cuttings G = grab ST = shelby tube**<br>**REC = Recovery PPM = parts per million ftbg = feet below grade MC = macro core sampler** | |

| DEPTH (FEET) | | SAMPLE TYPE | BLOW COUNT | REC. (FEET) | PID READING (PPM) | DESCRIPTION |
|---|---|---|---|---|---|---|
| FROM | TO | | | | | |
| 0 | 2 | SS | 4-10-50/2 | 0.5 | 1.1 | Very dense topsoil, SAND (fine to medium), weathered rock; brown; dry; no hydrocarbon odor |
| 2 | 4 | SS | 50/0 | 0 | - | - |
| 4 | 6 | SS | 12-15-6-8 | 1.0 | 8.9 | Medium dense SAND (fine to medium), SILT, weathered marble; brown and gray; moist; no hydrocarbon odor |
| 6 | 8 | SS | 24-50/3 | 0.25 | 4.9 | Very dense SAND (fine), SILT, weathered marble; brown; moist; no hydrocarbon odor |
| 8 | 10 | SS | 7-6-14-12 | 0.5 | 1.8 | Medium dense SAND (fine to coarse), SILT, weathered rock; brown; dry; no hydrocarbon odor |
| 10 | 12 | SS | 5-5-10-12 | 0.5 | 4.6 | Medium dense SAND (fine to coarse), SILT, weathered rock; brown; dry; no hydrocarbon odor |
| 12 | 14 | SS | 9-10-12-29 | 0.75 | 6.5 | Medium dense SAND (fine to coarse), SILT, weathered rock; brown; dry; no hydrocarbon odor |
| 14 | 16 | SS | 40-22-12-14 | 0.5 | 1.9 | Dense concrete; white; dry; no hydrocarbon odor |
| 16 | 18 | SS | 70-26-40-22 | 0.25 | 2.4 | Very dense concrete; white; dry; no hydrocarbon odor |
| 18 | 20 | SS | 50/6 | 0/25 | 1.0 | Very dense concrete; white; dry; no hydrocarbon odor |
| 20 | 22 | SS | 24-49-30-20 | 2.0 | - | Very dense Wood; tan; dry; strong organic odor (not hydrocarbon) |
| 22 | 24 | SS | 63/6 | 0.5 | 250.1 | Very dense fill, garbage, foam; black; moist; strong hydrocarbon odor |
| 24 | 26 | SS | 14-15-17-22 | 0.25 | 0 | Very dense wood; tan; dry; no hydrocarbon odor |

**OWNER**: Bilwin Development Affiliates, LLC

**WELL NO.:** TB-10 **PAGE:** 2 OF 2 PAGES

| DEPTH (FEET) | | SAMPLE TYPE | BLOW COUNT | REC. (FEET) | PID READING (PPM) | DESCRIPTION |
|---|---|---|---|---|---|---|
| FROM | TO | | | | | |
| 26 | 28 | SS | 4-4-5-3 | 0 | - | - |
| 28 | 30 | SS | 4-5-6-5 | 0.25 | 11.7 | Medium dense ash, charred wood; black; moist; burnt odor |
| 30 | 32 | SS | 5-4-2-1 | 0.25 | 0.9 | Loose charred wood; black; moist; burnt odor |
| 32 | 34 | SS | 1-12-15-45 | 1.0 | 235.7 | Medium dense SAND (fine), weathered rock, historic fill, glass; black; wet; strong hydrocarbon odor |
| | | | | | | |
| | | | | | | |
| | | | | | | Refusal at 34.5 ftbg |

| GEOLOGIC LOG<br>HydroEnvironmental SOLUTIONS, INC. | **OWNER**: Bilwin Development Affiliates, LLC<br>**WELL NO.:** TB-11<br>**PAGE** 1 **OF** 1 **PAGES** |
|---|---|
| **SITE LOCATION**: 109-125 Marbledale Road<br>Tuckahoe, New York<br>BCP Site #C360143 | **SCREEN SIZE & TYPE:** None<br>**SLOT NO.:** **SETTING**: |
| **DATE COMPLETED**: February 26 and 27, 2015 | **SAND PACK SIZE & TYPE:** None<br>**SETTING:** |
| **DRILLING COMPANY**: SoilTesting, Inc.<br>Oxford, Connecticut | **CASING SIZE & TYPE:** None<br>**SETTING:** |
| **DRILLING METHOD**: Diedrich D50M 4.25" HSA | |
| **SAMPLING METHOD**: 2.25" Split Spoon | **SEAL TYPE:** None<br>**SETTING:** |
| **OBSERVER**: REG | |
| **REFERENCE POINT (RP)**: Grade | **BACKFILL TYPE**: Portland and bentonite slurry |
| **ELEVATION OF RP**: | **STATIC WATER LEVEL**: |
| **STICK-UP**: | **DEVELOPMENT METHOD**: |
| **SURFACE COMPLETION**: | **DURATION**: – **YIELD**: – |
| **NOTES:** | |
| **ABBREVIATIONS: SS = split spoon W = wash C = cuttings G = grab ST = shelby tube**<br>**REC = Recovery PPM = parts per million ftbg = feet below grade MC = macro core sampler** | |

| DEPTH (FEET) | | SAMPLE TYPE | BLOW COUNT | REC. (FEET) | PID READING (PPM) | DESCRIPTION |
|---|---|---|---|---|---|---|
| FROM | TO | | | | | |
| 0 | 2 | SS | 5-9-12-15 | 1.5 | 2.4 | Medium dense topsoil, SAND (fine to medium), trace GRAVEL (fine, angular); brown; dry; no odor |
| 2 | 4 | SS | 24-50/4 | 1.0 | 0.7 | Very dense SAND (fine to medium), weathered rock, ash; black to gray; dry; no hydrocarbon odor |
| 4 | 6 | SS | 15-24-34-25 | 1.0 | 2.5 | Very dense SAND (medium to coarse), weathered rock, ash; gray; dry; no hydrocarbon odor |
| 6 | 8 | SS | 20-18-15-14 | 1.25 | 1.3 | Dense SAND (medium to coarse), weathered rock, ash; gray; dry; no hydrocarbon odor |
| 8 | 10 | SS | 9-8-8-7 | 0.5 | 0.9 | Medium dense SAND (fine to medium), SILT, weathered rock; brown to gray; moist; no hydrocarbon odor |
| 10 | 12 | SS | 10-7-7-50/3 | 0.75 | 1.5 | Medium dense SAND (fine to medium), SILT, weathered rock; brown to gray; moist; no hydrocarbon odor |
| 12 | 14 | SS | 57-54-24-17 | 1.0 | 0.7 | Very dense SAND (fine to medium), SILT, weathered rock; brown to gray; moist; no hydrocarbon odor |
| 14 | 16 | SS | 19-14-11-25 | 1.0 | 0.6 | Medium dense SAND (fine to coarse), weathered rock, ash; brown; dry; no hydrocarbon odor |
| 16 | 18 | SS | 24-50/3 | 0.75 | 1.8 | Very dense SAND (fine to coarse), trace SILT, weathered rock, brick; brown; wet; no hydrocarbon odor |
| 19 | 21 | SS | 31-9-11-21 | 0 | - | - |
| 21 | 23 | SS | 57/4 | 0.75 | 3.0 | Very dense SAND (fine to coarse), SILT, weathered rock; brown; wet; no hydrocarbon odor |
| | | | | | | |
| | | | | | | Refusal at 23 ftbg |

| GEOLOGIC LOG<br>HydroEnvironmental SOLUTIONS, INC. | **OWNER**: Bilwin Development Affiliates, LLC<br>**WELL NO.:** TB-12<br>**PAGE** 1 **OF** 2 **PAGES** |
|---|---|
| **SITE LOCATION**: 109-125 Marbledale Road<br>Tuckahoe, New York<br>BCP Site #C360143 | **SCREEN SIZE & TYPE:** None<br>**SLOT NO.:** **SETTING**: |
| **DATE COMPLETED**: February 26, 2015 | **SAND PACK SIZE & TYPE:** None<br>**SETTING:** |
| **DRILLING COMPANY**: SoilTesting, Inc.<br>Oxford, Connecticut | **CASING SIZE & TYPE:** None<br>**SETTING:** |
| **DRILLING METHOD**: Diedrich D50M 4.25" HSA | |
| **SAMPLING METHOD**: 2.25" Split Spoon | **SEAL TYPE:** None<br>**SETTING:** |
| **OBSERVER**: REG | |
| **REFERENCE POINT (RP)**: Grade | **BACKFILL TYPE**: Portland and bentonite slurry |
| **ELEVATION OF RP**: | **STATIC WATER LEVEL**: |
| **STICK-UP**: | **DEVELOPMENT METHOD**: |
| **SURFACE COMPLETION**: | **DURATION**: – **YIELD**: – |
| **NOTES:** | |
| **ABBREVIATIONS: SS = split spoon W = wash C = cuttings G = grab ST = shelby tube**<br>**REC = Recovery PPM = parts per million ftbg = feet below grade MC = macro core sampler** | |

| DEPTH (FEET) | | SAMPLE TYPE | BLOW COUNT | REC. (FEET) | PID READING (PPM) | DESCRIPTION |
|---|---|---|---|---|---|---|
| FROM | TO | | | | | |
| 0 | 2 | SS | 17-15-12-12 | 1.0 | 5.9 | Medium dense topsoil, SAND (fine to coarse), GRAVEL (fine, subangular); brown; dry; no hydrocarbon odor |
| 2 | 4 | SS | 10-10-10-10 | 1.9 | 62.4 | Medium dense SAND (fine to coarse), GRAVEL (fine, subangular); brown; dry; strong hydrocarbon odor |
| 4 | 6 | SS | 12-14-14-13 | 1.0 | 73.1 | Medium dense SAND (fine to coarse), trace GRAVEL (fine, subangular), weathered rock, ash; gray; dry; strong hydrocarbon odor |
| 6 | 8 | SS | 20-14-10-5 | 0 | - | No Recovery- |
| 8 | 10 | SS | 27-5-5-25 | 0.75 | 1.3 | Loose SAND (fine to coarse), weathered rock, ash; gray; dry; no hydrocarbon odor |
| 10 | 12 | SS | 15-12-12-14 | 1.0 | 0.7 | Medium dense SAND (fine to coarse), weathered rock, ash; gray; dry; no hydrocarbon odor |
| 12 | 14 | SS | 15-15-34-25 | 1.25 | 21.0 | Dense SAND (fine to coarse), weathered rock, ash; gray; dry; slight hydrocarbon odor |
| 14 | 16 | SS | 17-16-18-20 | 1.0 | 5.3 | Dense SAND (fine to coarse), weathered rock, ash; black; dry; slight charred odor |
| 16 | 18 | SS | 50/3 | 0.25 | 1.3 | Very dense SAND (medium to coarse), weathered rock; brown; dry; no hydrocarbon odor |
| 18 | 20 | SS | 21-24-18-27 | 1.0 | 1.7 | Dense SAND (fine to medium), weathered rock, ash; brown; dry; no hydrocarbon odor |
| 20 | 22 | SS | 25-27-30-40 | 1.5 | 4.1 | Very dense SAND (fine), SILT, weathered rock; ash; brown; dry; no hydrocarbon odor |
| 22 | 24 | SS | 50/4 | 0.5 | 2.3 | Very dense SAND (fine), SILT, weathered rock; brown; dry; no hydrocarbon odor |
| 24 | 26 | SS | 25-35-49-25 | 1.5 | 2.4 | Very dense SAND (fine to medium), SILT, weathered rock, wood; brown; dry; no hydrocarbon odor |

**OWNER**: Bilwin Development Affiliates, LLC

**WELL NO.:** TB-12 **PAGE:** 2 OF 2 PAGES

| DEPTH (FEET) | | SAMPLE TYPE | BLOW COUNT | REC. (FEET) | PID READING (PPM) | DESCRIPTION |
|---|---|---|---|---|---|---|
| FROM | TO | | | | | |
| 26 | 28 | SS | 25-48-50/2 | 1.0 | 2.5 | Very dense SAND (fine to medium), SILT, weathered rock, ash; gray to black; dry; no hydrocarbon odor |
| 28 | 30 | SS | 25-50/2 | 0.5 | 4.5 | Very dense SAND (fine), SILT and CLAY, wood; gray; wet; no hydrocarbon odor |
| 30 | 32 | SS | 50/1 | 0 | - | Spoon Refusal. Advanced augers to 33 fbg- |
| 33 | 35 | SS | 25-54-34-20 | 1.5 | 2.1 | Very dense SAND (fine to medium), SILT, GRAVEL (fine, rounded); gray; wet; no hydrocarbon odor |
| 35 | 37 | SS | 5-9-15-19 | 1.0 | 1.9 | Medium dense SAND (fine to medium), SILT, trace GRAVEL (fine, rounded); gray; wet; no hydrocarbon odor |
| 37 | 39 | SS | 10-10-5-6 | 1.5 | 2.1 | Medium dense SAND (fine to coarse), SILT, trace GRAVEL (fine, subrounded); dark gray; wet; no hydrocarbon odor |
| 39 | 41 | SS | 70/4 | 0.25 | 2.7 | Very dense SILT, CLAY, some SAND (fine); black; wet; organic odor |
| | | | | | | |
| | | | | | | Refusal at 40.5 ftbg |

Comments:

| GEOLOGIC LOG<br>HydroEnvironmental SOLUTIONS, INC. | **OWNER**: Bilwin Development Affiliates, LLC<br>**WELL NO.:** TB-13<br>**PAGE** 1 **OF** 2 **PAGES** |
|---|---|
| **SITE LOCATION**: 109-125 Marbledale Road<br>Tuckahoe, New York<br>BCP Site #C360143 | **SCREEN SIZE & TYPE:** None<br>**SLOT NO.:** **SETTING**: |
| **DATE COMPLETED**: February 25, 2015 | **SAND PACK SIZE & TYPE:** None<br>**SETTING:** |
| **DRILLING COMPANY**: SoilTesting, Inc.<br>Oxford, Connecticut | **CASING SIZE & TYPE:** None<br>**SETTING:** |
| **DRILLING METHOD**: Diedrich D50M 4.25" HSA | |
| **SAMPLING METHOD**: 2.25" Split Spoon | **SEAL TYPE:** None<br>**SETTING:** |
| **OBSERVER**: REG | |
| **REFERENCE POINT (RP)**: Grade | **BACKFILL TYPE**: Portland and bentonite slurry |
| **ELEVATION OF RP**: | **STATIC WATER LEVEL**: |
| **STICK-UP**: | **DEVELOPMENT METHOD**: |
| **SURFACE COMPLETION**: | **DURATION**: – **YIELD**: – |
| **NOTES:** | |
| **ABBREVIATIONS: SS = split spoon W = wash C = cuttings G = grab ST = shelby tube**<br>**REC = Recovery PPM = parts per million ftbg = feet below grade MC = macro core sampler** | |

| DEPTH (FEET) | | SAMPLE TYPE | BLOW COUNT | REC. (FEET) | PID READING (PPM) | DESCRIPTION |
|---|---|---|---|---|---|---|
| FROM | TO | | | | | |
| 0 | 2 | SS | 4-12-17-19 | 1.0 | 0.7 | Medium dense Topsoil, SAND (medium to coarse), GRAVEL (medium, angular); brown; dry; no hydrocarbon odor |
| 2 | 4 | SS | 45-50/4 | 1.0 | 0.7 | Very dense SAND (medium to coarse), GRAVEL (medium, angular); brown; dry; no hydrocarbon odor |
| 4 | 6 | SS | 8-7-4-5 | 1.0 | 17.2 | Medium dense SAND (medium to coarse), brick, ash; brown and red; dry; no hydrocarbon odor |
| 6 | 8 | SS | 7-1-1-1 | 0.5 | 2.1 | Very loose SAND (medium to coarse), brick, ash; brown and red; dry; no hydrocarbon odor |
| 8 | 10 | SS | 12-14-14-10 | 0.5 | 2.1 | Medium dense SAND (medium to coarse), brick, ash; brown and red; dry; no hydrocarbon odor |
| 10 | 12 | SS | 10-20-50/0 | 0.25 | 1.7 | Very dense SAND (medium to coarse), brick, ash; brown and red; dry; no hydrocarbon odor |
| 12 | 14 | SS | 20-30-14-14 | 1.0 | 0.4 | Dense SAND (medium to coarse), weathered marble, brick, ash; brown and red; dry; no hydrocarbon odor |
| 14 | 16 | SS | 19-23-57/0 | 0.75 | 0.8 | Very dense ash; black; moist; slight charred odor |
| 16 | 18 | SS | - | - | - | - |
| 18 | 20 | SS | 25-35-51-52 | 1.5 | 1.9 | Very dense SAND (medium to coarse), weathered rock, ash; dark gray; moist; slight hydrocarbon odor |
| 20 | 22 | SS | 25-51-44-27 | 1.5 | 1.6 | Very dense SAND (medium to coarse), weathered rock, ash, wood; black; dry; slight hydrocarbon odor |
| 22 | 24 | SS | 25-45-50/2 | 0.5 | 2.0 | Very dense SAND (medium to coarse), SILT, ash, glass; gray; moist; slight hydrocarbon odor |
| 24 | 26 | SS | 25-50/3 | 1.0 | 4.2 | Very dense SAND (medium to coarse), SILT, weathered rock, ash; gray; dry; slight hydrocarbon odor |

**OWNER**: Bilwin Development Affiliates, LLC

**WELL NO.:** TB-13 **PAGE:** 2 OF 2 PAGES

| DEPTH (FEET) | | SAMPLE TYPE | BLOW COUNT | REC. (FEET) | PID READING (PPM) | DESCRIPTION |
|---|---|---|---|---|---|---|
| FROM | TO | | | | | |
| 26 | 28 | SS | 45-26-17-15 | 1.0 | 1.9 | Dense SAND (medium to coarse), SILT, weathered rock, wood; gray; wet; no hydrocarbon odor |
| 28 | 30 | SS | 17-17-10-10 | 2.0 | 0.7 | Medium dense SAND (medium to coarse), SILT, trace GRAVEL (fine, angular); gray; wet; no hydrocarbon odor |
| 30 | 32 | SS | 10-8-5-7 | 0.25 | 1.9 | Medium dense SAND (fine to coarse), SILT, trace GRAVEL (fine, subrounded); gray; wet; no hydrocarbon odor |
| 32 | 34 | SS | 10-12-7-8 | 2.0 | 1.3 | Medium dense SAND (fine to coarse), SILT, trace GRAVEL (fine, subrounded); gray; wet; no hydrocarbon odor |
| 34 | 36 | SS | 50/0 | 0 | - | - |
| 36 | 38 | SS | 8-7-7-8 | 1.0 | 1.5 | Medium dense SAND (medium to coarse), SILT, GRAVEL (fine, angular); gray; wet; no hydrocarbon odor |
| 38 | 40 | SS | 8-10-7-9 | 1.0 | 1.0 | Medium dense SAND (medium to coarse), SILT, GRAVEL (fine, angular); gray; wet; no hydrocarbon odor |
| 40 | 42 | SS | 4-5-5-6 | 1.0 | 2.0 | Loose SAND (medium to coarse), SILT, GRAVEL (fine, angular); gray; wet; no hydrocarbon odor |
| 42 | 44 | SS | 4-5-25-35 | 1.5 | 2.9 | Dense SAND (medium to coarse), SILT, GRAVEL (fine, angular) grading to CLAY and weathered marble; gray; wet; no hydrocarbon odor |
| | | | | | | |
| | | | | | | |
| | | | | | | Refusal at 43.9 ftbg |

# APPENDIX D

# Laboratory Analytical Reports

# and

# Data Validation Review Reports

PHOENIX
Environmental Laboratories, Inc.

Monday, March 09, 2015

Attn: Mr. Tim Carr
HydroEnvironmental Solutions, Inc.
One Deans Bridge Rd
Somers NY 10589

Project ID: 109 MARBLEDALE RD TUCKAHOE NY
Sample ID#s: BH78390 - BH78391

This laboratory is in compliance with the NELAC requirements of procedures used except where indicated.

This report contains results for the parameters tested, under the sampling conditions described on the Chain Of Custody, as received by the laboratory.

All soils, solids and sludges are reported on a dry weight basis unless otherwise noted in the sample comments.

A scanned version of the COC form accompanies the analytical report and is an exact duplicate of the original.

If you have any questions concerning this testing, please do not hesitate to contact Phoenix Client Services at ext. 200.

Sincerely yours,

Phyllis Shiller

Phyllis Shiller
Laboratory Director

NELAC - #NY11301
CT Lab Registration #PH-0618
MA Lab Registration #MA-CT-007
ME Lab Registration #CT-007
NH Lab Registration #213693-A,B
NJ Lab Registration #CT-003
NY Lab Registration #11301
PA Lab Registration #68-03530
RI Lab Registration #63
VT Lab Registration #VT11301

587 East Middle Turnpike, P.O. Box 370, Manchester, CT 06040
Telephone (860) 645-1102 Fax (860) 645-0823

PHOENIX

Environmental Laboratories, Inc.
587 East Middle Turnpike, P.O.Box 370, Manchester, CT 06045
Tel. (860) 645-1102 Fax (860) 645-0823

ACCREDITED IN ACCORDANCE WITH nelac
NY # 11301

# SDG Comments

March 09, 2015

SDG I.D.: GBH78390

---

Please be advised that the NY 375 soil criteria for chromium are based on hexavalent chromium and trivalent chromium.

PHOENIX

Environmental Laboratories, Inc.
587 East Middle Turnpike, P.O.Box 370, Manchester, CT 06045
Tel. (860) 645-1102 Fax (860) 645-0823

ACCREDITED IN ACCORDANCE WITH nelac NY # 11301

# Analysis Report

March 09, 2015

FOR: Attn: Mr. Tim Carr
HydroEnvironmental Solutions, Inc.
One Deans Bridge Rd
Somers NY 10589

| Sample Information | | Custody Information | | Date | Time |
|---|---|---|---|---|---|
| Matrix: | SOLID | Collected by: | RG | 02/26/15 | 0:00 |
| Location Code: | HESNY-TUCK | Received by: | SW | 03/02/15 | 15:48 |
| Rush Request: | 72 Hour | Analyzed by: | see "By" below | | |
| P.O.#: | | | | | |

## Laboratory Data

SDG ID: GBH78390
Phoenix ID: BH78390

Project ID: 109 MARBLEDALE RD TUCKAHOE NY
Client ID: TB-13 4-6

| Parameter | Result | RL/ PQL | Units | Date/Time | By | Reference |
|---|---|---|---|---|---|---|
| Silver | < 0.39 | 0.39 | mg/Kg | 03/03/15 | EK | SW6010C |
| Aluminum | 8050 | 58 | mg/Kg | 03/03/15 | EK | SW6010C |
| Arsenic | 4.5 | 0.8 | mg/Kg | 03/03/15 | EK | SW6010C |
| Barium | 76.9 | 0.39 | mg/Kg | 03/03/15 | EK | SW6010C |
| Beryllium | 0.32 | 0.31 | mg/Kg | 03/03/15 | EK | SW6010C |
| Calcium | 31500 | 58 | mg/Kg | 03/03/15 | EK | SW6010C |
| Cadmium | < 0.39 | 0.39 | mg/Kg | 03/03/15 | EK | SW6010C |
| Cobalt | 7.17 | 0.39 | mg/Kg | 03/03/15 | EK | SW6010C |
| Chromium | 24.0 | 0.39 | mg/Kg | 03/03/15 | EK | SW6010C |
| Copper | 35.4 | 0.39 | mg/kg | 03/03/15 | EK | SW6010C |
| Iron | 13600 | 58 | mg/Kg | 03/03/15 | EK | SW6010C |
| Mercury | 0.32 | 0.03 | mg/Kg | 03/03/15 | MA | SW7471B |
| Potassium | 1930 | 5.8 | mg/Kg | 03/03/15 | EK | SW6010C |
| Magnesium | 16600 | 58 | mg/Kg | 03/03/15 | EK | SW6010C |
| Manganese | 195 | 3.9 | mg/Kg | 03/03/15 | EK | SW6010C |
| Sodium | 230 | 5.8 | mg/Kg | 03/03/15 | EK | SW6010C |
| Nickel | 25.3 | 0.39 | mg/Kg | 03/03/15 | EK | SW6010C |
| Lead | 82.8 | 0.39 | mg/Kg | 03/03/15 | EK | SW6010C |
| Antimony | < 3.9 | 3.9 | mg/Kg | 03/03/15 | EK | SW6010C |
| Selenium | < 1.5 | 1.5 | mg/Kg | 03/03/15 | EK | SW6010C |
| Thallium | < 3.5 | 3.5 | mg/Kg | 03/03/15 | EK | SW6010C |
| Vanadium | 32.6 | 0.39 | mg/Kg | 03/03/15 | EK | SW6010C |
| Zinc | 215 | 3.9 | mg/Kg | 03/03/15 | EK | SW6010C |
| Percent Solid | 84 | | % | 03/02/15 | i | SW846-%Solid |
| Total Cyanide | < 0.54 | 0.54 | mg/Kg | 03/04/15 | O/B/E | SW9010C/SW90 |
| Soil Extraction for PCB | Completed | | | 03/02/15 | CC/H | SW3545A |
| Soil Extraction for SVOA | Completed | | | 03/02/15 | CJ/VH | SW3545A |
| Mercury Digestion | Completed | | | 03/03/15 | I/I | SW7471B |

Project ID: 109 MARBLEDALE RD TUCKAHOE NY
Client ID: TB-13 4-6

Phoenix I.D.: BH78390

| Parameter | Result | RL/ PQL | Units | Date/Time | By | Reference |
|---|---|---|---|---|---|---|
| Total Metals Digest | Completed | | | 03/02/15 | CB/AG | SW3050B |
| **Polychlorinated Biphenyls** | | | | | | |
| PCB-1016 | ND | 78 | ug/Kg | 03/03/15 | AW | SW8082A |
| PCB-1221 | ND | 78 | ug/Kg | 03/03/15 | AW | SW8082A |
| PCB-1232 | ND | 78 | ug/Kg | 03/03/15 | AW | SW8082A |
| PCB-1242 | ND | 78 | ug/Kg | 03/03/15 | AW | SW8082A |
| PCB-1248 | ND | 78 | ug/Kg | 03/03/15 | AW | SW8082A |
| PCB-1254 | ND | 78 | ug/Kg | 03/03/15 | AW | SW8082A |
| PCB-1260 | ND | 78 | ug/Kg | 03/03/15 | AW | SW8082A |
| PCB-1262 | ND | 78 | ug/Kg | 03/03/15 | AW | SW8082A |
| PCB-1268 | ND | 78 | ug/Kg | 03/03/15 | AW | SW8082A |
| **QA/QC Surrogates** | | | | | | |
| % DCBP | 82 | | % | 03/03/15 | AW | 30 - 150 % |
| % TCMX | 84 | | % | 03/03/15 | AW | 30 - 150 % |
| **Volatiles (TCL)** | | | | | | |
| 1,1,1-Trichloroethane | ND | 6.0 | ug/kg | 03/04/15 | JLI | SW8260C |
| 1,1,2,2-Tetrachloroethane | ND | 6.0 | ug/kg | 03/04/15 | JLI | SW8260C |
| 1,1,2-Trichloroethane | ND | 6.0 | ug/kg | 03/04/15 | JLI | SW8260C |
| 1,1-Dichloroethane | ND | 6.0 | ug/kg | 03/04/15 | JLI | SW8260C |
| 1,1-Dichloroethene | ND | 6.0 | ug/kg | 03/04/15 | JLI | SW8260C |
| 1,2,3-Trichlorobenzene | ND | 6.0 | ug/kg | 03/04/15 | JLI | SW8260C |
| 1,2,4-Trichlorobenzene | ND | 6.0 | ug/kg | 03/04/15 | JLI | SW8260C |
| 1,2-Dibromo-3-chloropropane | ND | 6.0 | ug/kg | 03/04/15 | JLI | SW8260C |
| 1,2-Dibromoethane | ND | 6.0 | ug/kg | 03/04/15 | JLI | SW8260C |
| 1,2-Dichlorobenzene | ND | 6.0 | ug/kg | 03/04/15 | JLI | SW8260C |
| 1,2-Dichloroethane | ND | 6.0 | ug/kg | 03/04/15 | JLI | SW8260C |
| 1,2-Dichloropropane | ND | 6.0 | ug/kg | 03/04/15 | JLI | SW8260C |
| 1,3-Dichlorobenzene | ND | 6.0 | ug/kg | 03/04/15 | JLI | SW8260C |
| 1,4-Dichlorobenzene | ND | 6.0 | ug/kg | 03/04/15 | JLI | SW8260C |
| 2-Hexanone | ND | 30 | ug/kg | 03/04/15 | JLI | SW8260C |
| 4-Methyl-2-pentanone | ND | 30 | ug/kg | 03/04/15 | JLI | SW8260C |
| Acetone | ND | 50 | ug/kg | 03/04/15 | JLI | SW8260C |
| Benzene | ND | 6.0 | ug/kg | 03/04/15 | JLI | SW8260C |
| Bromochloromethane | ND | 6.0 | ug/kg | 03/04/15 | JLI | SW8260C |
| Bromodichloromethane | ND | 6.0 | ug/kg | 03/04/15 | JLI | SW8260C |
| Bromoform | ND | 6.0 | ug/kg | 03/04/15 | JLI | SW8260C |
| Bromomethane | ND | 6.0 | ug/kg | 03/04/15 | JLI | SW8260C |
| Carbon Disulfide | ND | 6.0 | ug/kg | 03/04/15 | JLI | SW8260C |
| Carbon tetrachloride | ND | 6.0 | ug/kg | 03/04/15 | JLI | SW8260C |
| Chlorobenzene | ND | 6.0 | ug/kg | 03/04/15 | JLI | SW8260C |
| Chloroethane | ND | 6.0 | ug/kg | 03/04/15 | JLI | SW8260C |
| Chloroform | ND | 6.0 | ug/kg | 03/04/15 | JLI | SW8260C |
| Chloromethane | ND | 6.0 | ug/kg | 03/04/15 | JLI | SW8260C |
| cis-1,2-Dichloroethene | ND | 6.0 | ug/kg | 03/04/15 | JLI | SW8260C |
| cis-1,3-Dichloropropene | ND | 6.0 | ug/kg | 03/04/15 | JLI | SW8260C |
| Cyclohexane | ND | 6.0 | ug/kg | 03/04/15 | JLI | SW8260C |
| Dibromochloromethane | ND | 6.0 | ug/kg | 03/04/15 | JLI | SW8260C |
| Dichlorodifluoromethane | ND | 6.0 | ug/kg | 03/04/15 | JLI | SW8260C |

Project ID: 109 MARBLEDALE RD TUCKAHOE NY
Client ID: TB-13 4-6

Phoenix I.D.: BH78390

| Parameter | Result | RL/ PQL | Units | Date/Time | By | Reference | |
|---|---|---|---|---|---|---|---|
| Ethylbenzene | ND | 6.0 | ug/kg | 03/04/15 | JLI | SW8260C | |
| Isopropylbenzene | ND | 6.0 | ug/kg | 03/04/15 | JLI | SW8260C | |
| m&p-Xylene | ND | 6.0 | ug/kg | 03/04/15 | JLI | SW8260C | |
| Methyl ethyl ketone | ND | 36 | ug/kg | 03/04/15 | JLI | SW8260C | |
| Methyl t-butyl ether (MTBE) | ND | 12 | ug/kg | 03/04/15 | JLI | SW8260C | |
| Methylacetate | ND | 4.8 | ug/kg | 03/04/15 | JLI | SW8260C | |
| Methylcyclohexane | ND | 6.0 | ug/kg | 03/04/15 | JLI | SW8260C | |
| Methylene chloride | ND | 6.0 | ug/kg | 03/04/15 | JLI | SW8260C | |
| o-Xylene | ND | 6.0 | ug/kg | 03/04/15 | JLI | SW8260C | |
| Styrene | ND | 6.0 | ug/kg | 03/04/15 | JLI | SW8260C | |
| Tetrachloroethene | ND | 6.0 | ug/kg | 03/04/15 | JLI | SW8260C | |
| Toluene | ND | 6.0 | ug/kg | 03/04/15 | JLI | SW8260C | |
| Total Xylenes | ND | 6.0 | ug/kg | 03/04/15 | JLI | SW8260C | |
| trans-1,2-Dichloroethene | ND | 6.0 | ug/kg | 03/04/15 | JLI | SW8260C | |
| trans-1,3-Dichloropropene | ND | 6.0 | ug/kg | 03/04/15 | JLI | SW8260C | |
| Trichloroethene | ND | 6.0 | ug/kg | 03/04/15 | JLI | SW8260C | |
| Trichlorofluoromethane | ND | 6.0 | ug/kg | 03/04/15 | JLI | SW8260C | |
| Trichlorotrifluoroethane | ND | 6.0 | ug/kg | 03/04/15 | JLI | SW8260C | |
| Vinyl chloride | ND | 6.0 | ug/kg | 03/04/15 | JLI | SW8260C | |
| **QA/QC Surrogates** | | | | | | | |
| % 1,2-dichlorobenzene-d4 | 97 | | % | 03/04/15 | JLI | 70 - 130 % | |
| % Bromofluorobenzene | 93 | | % | 03/04/15 | JLI | 70 - 130 % | |
| % Dibromofluoromethane | 97 | | % | 03/04/15 | JLI | 70 - 130 % | |
| % Toluene-d8 | 94 | | % | 03/04/15 | JLI | 70 - 130 % | |
| **1,4-dioxane** | | | | | | | |
| 1,4-dioxane | ND | 100 | ug/kg | 03/04/15 | JLI | SW8260C | |
| **Semivolatiles** | | | | | | | |
| 1,1-Biphenyl | ND | 1400 | ug/Kg | 03/04/15 | DD | SW8270D | |
| 1,2,4,5-Tetrachlorobenzene | ND | 1400 | ug/Kg | 03/04/15 | DD | SW8270D | |
| 2,3,4,6-tetrachlorophenol | ND | 1400 | ug/Kg | 03/04/15 | DD | SW8270D | |
| 2,4,5-Trichlorophenol | ND | 1400 | ug/Kg | 03/04/15 | DD | SW8270D | |
| 2,4,6-Trichlorophenol | ND | 1400 | ug/Kg | 03/04/15 | DD | SW8270D | |
| 2,4-Dichlorophenol | ND | 1400 | ug/Kg | 03/04/15 | DD | SW8270D | |
| 2,4-Dimethylphenol | ND | 1400 | ug/Kg | 03/04/15 | DD | SW8270D | |
| 2,4-Dinitrophenol | ND | 3100 | ug/Kg | 03/04/15 | DD | SW8270D | |
| 2,4-Dinitrotoluene | ND | 1400 | ug/Kg | 03/04/15 | DD | SW8270D | |
| 2,6-Dinitrotoluene | ND | 1400 | ug/Kg | 03/04/15 | DD | SW8270D | |
| 2-Chloronaphthalene | ND | 1400 | ug/Kg | 03/04/15 | DD | SW8270D | |
| 2-Chlorophenol | ND | 1400 | ug/Kg | 03/04/15 | DD | SW8270D | |
| 2-Methylnaphthalene | ND | 1400 | ug/Kg | 03/04/15 | DD | SW8270D | |
| 2-Methylphenol (o-cresol) | ND | 1400 | ug/Kg | 03/04/15 | DD | SW8270D | |
| 2-Nitroaniline | ND | 3100 | ug/Kg | 03/04/15 | DD | SW8270D | |
| 2-Nitrophenol | ND | 1400 | ug/Kg | 03/04/15 | DD | SW8270D | |
| 3&4-Methylphenol (m&p-cresol) | ND | 1900 | ug/Kg | 03/04/15 | DD | SW8270D | 1 |
| 3,3'-Dichlorobenzidine | ND | 2300 | ug/Kg | 03/04/15 | DD | SW8270D | |
| 3-Nitroaniline | ND | 3100 | ug/Kg | 03/04/15 | DD | SW8270D | |
| 4,6-Dinitro-2-methylphenol | ND | 5600 | ug/Kg | 03/04/15 | DD | SW8270D | |
| 4-Bromophenyl phenyl ether | ND | 1900 | ug/Kg | 03/04/15 | DD | SW8270D | |

Project ID: 109 MARBLEDALE RD TUCKAHOE NY
Client ID: TB-13 4-6

Phoenix I.D.: BH78390

| Parameter | Result | RL/ PQL | Units | Date/Time | By | Reference | |
|---|---|---|---|---|---|---|---|
| 4-Chloro-3-methylphenol | ND | 1400 | ug/Kg | 03/04/15 | DD | SW8270D | |
| 4-Chloroaniline | ND | 1400 | ug/Kg | 03/04/15 | DD | SW8270D | |
| 4-Chlorophenyl phenyl ether | ND | 1400 | ug/Kg | 03/04/15 | DD | SW8270D | |
| 4-Nitroaniline | ND | 3100 | ug/Kg | 03/04/15 | DD | SW8270D | |
| 4-Nitrophenol | ND | 5600 | ug/Kg | 03/04/15 | DD | SW8270D | |
| Acenaphthene | ND | 1400 | ug/Kg | 03/04/15 | DD | SW8270D | |
| Acenaphthylene | ND | 1400 | ug/Kg | 03/04/15 | DD | SW8270D | |
| Acetophenone | ND | 1400 | ug/Kg | 03/04/15 | DD | SW8270D | |
| Anthracene | 2200 | 1400 | ug/Kg | 03/04/15 | DD | SW8270D | |
| Atrazine | ND | 1400 | ug/Kg | 03/04/15 | DD | SW8270D | |
| Benz(a)anthracene | 5900 | 1400 | ug/Kg | 03/04/15 | DD | SW8270D | |
| Benzaldehyde | ND | 1400 | ug/Kg | 03/04/15 | DD | SW8270D | |
| Benzo(a)pyrene | 5200 | 1400 | ug/Kg | 03/04/15 | DD | SW8270D | |
| Benzo(b)fluoranthene | 6400 | 1400 | ug/Kg | 03/04/15 | DD | SW8270D | |
| Benzo(ghi)perylene | 1900 | 1400 | ug/Kg | 03/04/15 | DD | SW8270D | |
| Benzo(k)fluoranthene | 2200 | 1400 | ug/Kg | 03/04/15 | DD | SW8270D | |
| Benzyl butyl phthalate | ND | 1400 | ug/Kg | 03/04/15 | DD | SW8270D | |
| Bis(2-chloroethoxy)methane | ND | 1400 | ug/Kg | 03/04/15 | DD | SW8270D | |
| Bis(2-chloroethyl)ether | ND | 1900 | ug/Kg | 03/04/15 | DD | SW8270D | |
| Bis(2-chloroisopropyl)ether | ND | 1400 | ug/Kg | 03/04/15 | DD | SW8270D | 1 |
| Bis(2-ethylhexyl)phthalate | ND | 1400 | ug/Kg | 03/04/15 | DD | SW8270D | |
| Caprolactam | ND | 1400 | ug/Kg | 03/04/15 | DD | SW8270D | |
| Carbazole | ND | 5600 | ug/Kg | 03/04/15 | DD | SW8270D | |
| Chrysene | 5600 | 1400 | ug/Kg | 03/04/15 | DD | SW8270D | |
| Dibenz(a,h)anthracene | ND | 1400 | ug/Kg | 03/04/15 | DD | SW8270D | |
| Dibenzofuran | ND | 1400 | ug/Kg | 03/04/15 | DD | SW8270D | |
| Diethyl phthalate | ND | 1400 | ug/Kg | 03/04/15 | DD | SW8270D | |
| Dimethylphthalate | ND | 1400 | ug/Kg | 03/04/15 | DD | SW8270D | |
| Di-n-butylphthalate | ND | 1400 | ug/Kg | 03/04/15 | DD | SW8270D | |
| Di-n-octylphthalate | ND | 1400 | ug/Kg | 03/04/15 | DD | SW8270D | |
| Fluoranthene | 9200 | 1400 | ug/Kg | 03/04/15 | DD | SW8270D | |
| Fluorene | ND | 1400 | ug/Kg | 03/04/15 | DD | SW8270D | |
| Hexachlorobenzene | ND | 1400 | ug/Kg | 03/04/15 | DD | SW8270D | |
| Hexachlorobutadiene | ND | 1400 | ug/Kg | 03/04/15 | DD | SW8270D | |
| Hexachlorocyclopentadiene | ND | 1400 | ug/Kg | 03/04/15 | DD | SW8270D | |
| Hexachloroethane | ND | 1400 | ug/Kg | 03/04/15 | DD | SW8270D | |
| Indeno(1,2,3-cd)pyrene | 1900 | 1400 | ug/Kg | 03/04/15 | DD | SW8270D | |
| Isophorone | ND | 1400 | ug/Kg | 03/04/15 | DD | SW8270D | |
| Naphthalene | ND | 1400 | ug/Kg | 03/04/15 | DD | SW8270D | |
| Nitrobenzene | ND | 1400 | ug/Kg | 03/04/15 | DD | SW8270D | |
| N-Nitrosodimethylamine | ND | 1900 | ug/Kg | 03/04/15 | DD | SW8270D | |
| N-Nitrosodi-n-propylamine | ND | 1400 | ug/Kg | 03/04/15 | DD | SW8270D | |
| N-Nitrosodiphenylamine | ND | 1900 | ug/Kg | 03/04/15 | DD | SW8270D | |
| Pentachlorophenol | ND | 1900 | ug/Kg | 03/04/15 | DD | SW8270D | |
| Phenanthrene | 7000 | 1400 | ug/Kg | 03/04/15 | DD | SW8270D | |
| Phenol | ND | 1400 | ug/Kg | 03/04/15 | DD | SW8270D | |
| Pyrene | 7400 | 1400 | ug/Kg | 03/04/15 | DD | SW8270D | |
| **QA/QC Surrogates** | | | | | | | |
| % 2,4,6-Tribromophenol | 96 | | % | 03/04/15 | DD | 30 - 130 % | |

Project ID: 109 MARBLEDALE RD TUCKAHOE NY
Client ID: TB-13 4-6

Phoenix I.D.: BH78390

| Parameter | Result | RL/ PQL | Units | Date/Time | By | Reference |
|---|---|---|---|---|---|---|
| % 2-Fluorobiphenyl | 79 | | % | 03/04/15 | DD | 30 - 130 % |
| % 2-Fluorophenol | 73 | | % | 03/04/15 | DD | 30 - 130 % |
| % Nitrobenzene-d5 | 78 | | % | 03/04/15 | DD | 30 - 130 % |
| % Phenol-d5 | 74 | | % | 03/04/15 | DD | 30 - 130 % |
| % Terphenyl-d14 | 65 | | % | 03/04/15 | DD | 30 - 130 % |
| SVOA Library Search Top 15 | Completed | | | 03/05/15 | DD | |

1 = This parameter is not certified by NY NELAC for this matrix. NY NELAC does not offer certification for all parameters at this time.

**RL/PQL=Reporting/Practical Quantitation Level (Equivalent to NELAC LOQ, Limit of Quanitation) ND=Not Detected BRL=Below Reporting Level**

## Comments:

Please be advised that the NY 375 soil criteria for chromium are based on hexavalent chromium and trivalent chromium.

All soils, solids and sludges are reported on a dry weight basis unless otherwise noted in the sample comments.

If there are any questions regarding this data, please call Phoenix Client Services at extension 200.
This report must not be reproduced except in full as defined by the attached chain of custody.

**Phyllis Shiller, Laboratory Director**
**March 09, 2015**
**Reviewed and Released by: Phyllis Shiller, Laboratory Director**

PHOENIX

Environmental Laboratories, Inc.
587 East Middle Turnpike, P.O.Box 370, Manchester, CT 06045
Tel. (860) 645-1102 Fax (860) 645-0823

ACCREDITED IN ACCORDANCE WITH nelac NY # 11301

# Analysis Report

March 09, 2015

FOR: Attn: Mr. Tim Carr
HydroEnvironmental Solutions, Inc.
One Deans Bridge Rd
Somers NY 10589

| Sample Information | | Custody Information | | Date | Time |
|---|---|---|---|---|---|
| Matrix: | SOLID | Collected by: | RG | 02/26/15 | 0:00 |
| Location Code: | HESNY-TUCK | Received by: | SW | 03/02/15 | 15:48 |
| Rush Request: | 72 Hour | Analyzed by: | see "By" below | | |
| P.O.#: | | | | | |

## Laboratory Data

SDG ID: GBH78390
Phoenix ID: BH78391

Project ID: 109 MARBLEDALE RD TUCKAHOE NY
Client ID: TB-13 26-28

| Parameter | Result | RL/ PQL | Units | Date/Time | By | Reference |
|---|---|---|---|---|---|---|
| Silver | < 0.37 | 0.37 | mg/Kg | 03/03/15 | EK | SW6010C |
| Aluminum | 10400 | 56 | mg/Kg | 03/03/15 | EK | SW6010C |
| Arsenic | 1.2 | 0.7 | mg/Kg | 03/03/15 | EK | SW6010C |
| Barium | 77.7 | 0.37 | mg/Kg | 03/03/15 | EK | SW6010C |
| Beryllium | 0.31 | 0.30 | mg/Kg | 03/03/15 | EK | SW6010C |
| Calcium | 15200 | 56 | mg/Kg | 03/03/15 | EK | SW6010C |
| Cadmium | < 0.37 | 0.37 | mg/Kg | 03/03/15 | EK | SW6010C |
| Cobalt | 9.14 | 0.37 | mg/Kg | 03/03/15 | EK | SW6010C |
| Chromium | 31.4 | 0.37 | mg/Kg | 03/03/15 | EK | SW6010C |
| Copper | 20.3 | 0.37 | mg/kg | 03/03/15 | EK | SW6010C |
| Iron | 16400 | 56 | mg/Kg | 03/03/15 | EK | SW6010C |
| Mercury | < 0.03 | 0.03 | mg/Kg | 03/03/15 | MA | SW7471B |
| Potassium | 2650 | 5.6 | mg/Kg | 03/03/15 | EK | SW6010C |
| Magnesium | 7560 | 56 | mg/Kg | 03/03/15 | EK | SW6010C |
| Manganese | 302 | 3.7 | mg/Kg | 03/03/15 | EK | SW6010C |
| Sodium | 198 | 5.6 | mg/Kg | 03/03/15 | EK | SW6010C |
| Nickel | 20.8 | 0.37 | mg/Kg | 03/03/15 | EK | SW6010C |
| Lead | 11.8 | 0.37 | mg/Kg | 03/03/15 | EK | SW6010C |
| Antimony | < 3.7 | 3.7 | mg/Kg | 03/03/15 | EK | SW6010C |
| Selenium | < 1.5 | 1.5 | mg/Kg | 03/03/15 | EK | SW6010C |
| Thallium | < 3.3 | 3.3 | mg/Kg | 03/03/15 | EK | SW6010C |
| Vanadium | 31.1 | 0.37 | mg/Kg | 03/03/15 | EK | SW6010C |
| Zinc | 58.8 | 0.37 | mg/Kg | 03/03/15 | EK | SW6010C |
| Percent Solid | 80 | | % | 03/02/15 | i | SW846-%Solid |
| Total Cyanide | < 0.57 | 0.57 | mg/Kg | 03/04/15 | O/B/E | SW9010C/SW90 |
| Soil Extraction for PCB | Completed | | | 03/02/15 | CC/H | SW3545A |
| Soil Extraction for SVOA | Completed | | | 03/02/15 | CJ/VH | SW3545A |
| Mercury Digestion | Completed | | | 03/03/15 | I/I | SW7471B |

Project ID: 109 MARBLEDALE RD TUCKAHOE NY
Client ID: TB-13 26-28

Phoenix I.D.: BH78391

| Parameter | Result | RL/ PQL | Units | Date/Time | By | Reference |
|---|---|---|---|---|---|---|
| Total Metals Digest | Completed | | | 03/02/15 | CB/AG | SW3050B |
| **Polychlorinated Biphenyls** | | | | | | |
| PCB-1016 | ND | 82 | ug/Kg | 03/03/15 | AW | SW8082A |
| PCB-1221 | ND | 82 | ug/Kg | 03/03/15 | AW | SW8082A |
| PCB-1232 | ND | 82 | ug/Kg | 03/03/15 | AW | SW8082A |
| PCB-1242 | ND | 82 | ug/Kg | 03/03/15 | AW | SW8082A |
| PCB-1248 | ND | 82 | ug/Kg | 03/03/15 | AW | SW8082A |
| PCB-1254 | ND | 82 | ug/Kg | 03/03/15 | AW | SW8082A |
| PCB-1260 | ND | 82 | ug/Kg | 03/03/15 | AW | SW8082A |
| PCB-1262 | ND | 82 | ug/Kg | 03/03/15 | AW | SW8082A |
| PCB-1268 | ND | 82 | ug/Kg | 03/03/15 | AW | SW8082A |
| **QA/QC Surrogates** | | | | | | |
| % DCBP | 61 | | % | 03/03/15 | AW | 30 - 150 % |
| % TCMX | 66 | | % | 03/03/15 | AW | 30 - 150 % |
| **Volatiles (TCL)** | | | | | | |
| 1,1,1-Trichloroethane | ND | 5.3 | ug/kg | 03/04/15 | JLI | SW8260C |
| 1,1,2,2-Tetrachloroethane | ND | 5.3 | ug/kg | 03/04/15 | JLI | SW8260C |
| 1,1,2-Trichloroethane | ND | 5.3 | ug/kg | 03/04/15 | JLI | SW8260C |
| 1,1-Dichloroethane | ND | 5.3 | ug/kg | 03/04/15 | JLI | SW8260C |
| 1,1-Dichloroethene | ND | 5.3 | ug/kg | 03/04/15 | JLI | SW8260C |
| 1,2,3-Trichlorobenzene | ND | 5.3 | ug/kg | 03/04/15 | JLI | SW8260C |
| 1,2,4-Trichlorobenzene | ND | 5.3 | ug/kg | 03/04/15 | JLI | SW8260C |
| 1,2-Dibromo-3-chloropropane | ND | 5.3 | ug/kg | 03/04/15 | JLI | SW8260C |
| 1,2-Dibromoethane | ND | 5.3 | ug/kg | 03/04/15 | JLI | SW8260C |
| 1,2-Dichlorobenzene | ND | 5.3 | ug/kg | 03/04/15 | JLI | SW8260C |
| 1,2-Dichloroethane | ND | 5.3 | ug/kg | 03/04/15 | JLI | SW8260C |
| 1,2-Dichloropropane | ND | 5.3 | ug/kg | 03/04/15 | JLI | SW8260C |
| 1,3-Dichlorobenzene | ND | 5.3 | ug/kg | 03/04/15 | JLI | SW8260C |
| 1,4-Dichlorobenzene | ND | 5.3 | ug/kg | 03/04/15 | JLI | SW8260C |
| 2-Hexanone | ND | 27 | ug/kg | 03/04/15 | JLI | SW8260C |
| 4-Methyl-2-pentanone | ND | 27 | ug/kg | 03/04/15 | JLI | SW8260C |
| Acetone | 200 | 53 | ug/kg | 03/04/15 | JLI | SW8260C |
| Benzene | ND | 5.3 | ug/kg | 03/04/15 | JLI | SW8260C |
| Bromochloromethane | ND | 5.3 | ug/kg | 03/04/15 | JLI | SW8260C |
| Bromodichloromethane | ND | 5.3 | ug/kg | 03/04/15 | JLI | SW8260C |
| Bromoform | ND | 5.3 | ug/kg | 03/04/15 | JLI | SW8260C |
| Bromomethane | ND | 5.3 | ug/kg | 03/04/15 | JLI | SW8260C |
| Carbon Disulfide | 6.9 | 5.3 | ug/kg | 03/04/15 | JLI | SW8260C |
| Carbon tetrachloride | ND | 5.3 | ug/kg | 03/04/15 | JLI | SW8260C |
| Chlorobenzene | ND | 5.3 | ug/kg | 03/04/15 | JLI | SW8260C |
| Chloroethane | ND | 5.3 | ug/kg | 03/04/15 | JLI | SW8260C |
| Chloroform | ND | 5.3 | ug/kg | 03/04/15 | JLI | SW8260C |
| Chloromethane | ND | 5.3 | ug/kg | 03/04/15 | JLI | SW8260C |
| cis-1,2-Dichloroethene | ND | 5.3 | ug/kg | 03/04/15 | JLI | SW8260C |
| cis-1,3-Dichloropropene | ND | 5.3 | ug/kg | 03/04/15 | JLI | SW8260C |
| Cyclohexane | ND | 5.3 | ug/kg | 03/04/15 | JLI | SW8260C |
| Dibromochloromethane | ND | 5.3 | ug/kg | 03/04/15 | JLI | SW8260C |
| Dichlorodifluoromethane | ND | 200 | ug/kg | 03/04/15 | JLI | SW8260C |

Project ID: 109 MARBLEDALE RD TUCKAHOE NY
Client ID: TB-13 26-28

Phoenix I.D.: BH78391

| Parameter | Result | RL/ PQL | Units | Date/Time | By | Reference | |
|---|---|---|---|---|---|---|---|
| Ethylbenzene | ND | 5.3 | ug/kg | 03/04/15 | JLI | SW8260C | |
| Isopropylbenzene | ND | 5.3 | ug/kg | 03/04/15 | JLI | SW8260C | |
| m&p-Xylene | ND | 5.3 | ug/kg | 03/04/15 | JLI | SW8260C | |
| Methyl ethyl ketone | ND | 32 | ug/kg | 03/04/15 | JLI | SW8260C | |
| Methyl t-butyl ether (MTBE) | ND | 11 | ug/kg | 03/04/15 | JLI | SW8260C | |
| Methylacetate | ND | 4.3 | ug/kg | 03/04/15 | JLI | SW8260C | |
| Methylcyclohexane | ND | 5.3 | ug/kg | 03/04/15 | JLI | SW8260C | |
| Methylene chloride | ND | 5.3 | ug/kg | 03/04/15 | JLI | SW8260C | |
| o-Xylene | ND | 5.3 | ug/kg | 03/04/15 | JLI | SW8260C | |
| Styrene | ND | 5.3 | ug/kg | 03/04/15 | JLI | SW8260C | |
| Tetrachloroethene | ND | 5.3 | ug/kg | 03/04/15 | JLI | SW8260C | |
| Toluene | ND | 5.3 | ug/kg | 03/04/15 | JLI | SW8260C | |
| Total Xylenes | ND | 5.3 | ug/kg | 03/04/15 | JLI | SW8260C | |
| trans-1,2-Dichloroethene | ND | 5.3 | ug/kg | 03/04/15 | JLI | SW8260C | |
| trans-1,3-Dichloropropene | ND | 5.3 | ug/kg | 03/04/15 | JLI | SW8260C | |
| Trichloroethene | ND | 5.3 | ug/kg | 03/04/15 | JLI | SW8260C | |
| Trichlorofluoromethane | ND | 5.3 | ug/kg | 03/04/15 | JLI | SW8260C | |
| Trichlorotrifluoroethane | ND | 5.3 | ug/kg | 03/04/15 | JLI | SW8260C | |
| Vinyl chloride | ND | 5.3 | ug/kg | 03/04/15 | JLI | SW8260C | |
| **QA/QC Surrogates** | | | | | | | |
| % 1,2-dichlorobenzene-d4 | 100 | | % | 03/04/15 | JLI | 70 - 130 % | |
| % Bromofluorobenzene | 95 | | % | 03/04/15 | JLI | 70 - 130 % | |
| % Dibromofluoromethane | 51 | | % | 03/04/15 | JLI | 70 - 130 % | 3 |
| % Toluene-d8 | 97 | | % | 03/04/15 | JLI | 70 - 130 % | |
| **1,4-dioxane** | | | | | | | |
| 1,4-dioxane | ND | 100 | ug/kg | 03/04/15 | JLI | SW8260C | |
| **Semivolatiles** | | | | | | | |
| 1,1-Biphenyl | ND | 280 | ug/Kg | 03/03/15 | DD | SW8270D | |
| 1,2,4,5-Tetrachlorobenzene | ND | 280 | ug/Kg | 03/03/15 | DD | SW8270D | |
| 2,3,4,6-tetrachlorophenol | ND | 280 | ug/Kg | 03/03/15 | DD | SW8270D | |
| 2,4,5-Trichlorophenol | ND | 280 | ug/Kg | 03/03/15 | DD | SW8270D | |
| 2,4,6-Trichlorophenol | ND | 280 | ug/Kg | 03/03/15 | DD | SW8270D | |
| 2,4-Dichlorophenol | ND | 280 | ug/Kg | 03/03/15 | DD | SW8270D | |
| 2,4-Dimethylphenol | ND | 280 | ug/Kg | 03/03/15 | DD | SW8270D | |
| 2,4-Dinitrophenol | ND | 650 | ug/Kg | 03/03/15 | DD | SW8270D | |
| 2,4-Dinitrotoluene | ND | 280 | ug/Kg | 03/03/15 | DD | SW8270D | |
| 2,6-Dinitrotoluene | ND | 280 | ug/Kg | 03/03/15 | DD | SW8270D | |
| 2-Chloronaphthalene | ND | 280 | ug/Kg | 03/03/15 | DD | SW8270D | |
| 2-Chlorophenol | ND | 280 | ug/Kg | 03/03/15 | DD | SW8270D | |
| 2-Methylnaphthalene | ND | 280 | ug/Kg | 03/03/15 | DD | SW8270D | |
| 2-Methylphenol (o-cresol) | ND | 280 | ug/Kg | 03/03/15 | DD | SW8270D | |
| 2-Nitroaniline | ND | 650 | ug/Kg | 03/03/15 | DD | SW8270D | |
| 2-Nitrophenol | ND | 280 | ug/Kg | 03/03/15 | DD | SW8270D | |
| 3&4-Methylphenol (m&p-cresol) | ND | 410 | ug/Kg | 03/03/15 | DD | SW8270D | 1 |
| 3,3'-Dichlorobenzidine | ND | 490 | ug/Kg | 03/03/15 | DD | SW8270D | |
| 3-Nitroaniline | ND | 650 | ug/Kg | 03/03/15 | DD | SW8270D | |
| 4,6-Dinitro-2-methylphenol | ND | 1200 | ug/Kg | 03/03/15 | DD | SW8270D | |
| 4-Bromophenyl phenyl ether | ND | 410 | ug/Kg | 03/03/15 | DD | SW8270D | |

Project ID: 109 MARBLEDALE RD TUCKAHOE NY
Client ID: TB-13 26-28

Phoenix I.D.: BH78391

| Parameter | Result | RL/ PQL | Units | Date/Time | By | Reference | |
|---|---|---|---|---|---|---|---|
| 4-Chloro-3-methylphenol | ND | 280 | ug/Kg | 03/03/15 | DD | SW8270D | |
| 4-Chloroaniline | ND | 280 | ug/Kg | 03/03/15 | DD | SW8270D | |
| 4-Chlorophenyl phenyl ether | ND | 280 | ug/Kg | 03/03/15 | DD | SW8270D | |
| 4-Nitroaniline | ND | 650 | ug/Kg | 03/03/15 | DD | SW8270D | |
| 4-Nitrophenol | ND | 1200 | ug/Kg | 03/03/15 | DD | SW8270D | |
| Acenaphthene | ND | 280 | ug/Kg | 03/03/15 | DD | SW8270D | |
| Acenaphthylene | ND | 280 | ug/Kg | 03/03/15 | DD | SW8270D | |
| Acetophenone | ND | 280 | ug/Kg | 03/03/15 | DD | SW8270D | |
| Anthracene | ND | 280 | ug/Kg | 03/03/15 | DD | SW8270D | |
| Atrazine | ND | 280 | ug/Kg | 03/03/15 | DD | SW8270D | |
| Benz(a)anthracene | ND | 280 | ug/Kg | 03/03/15 | DD | SW8270D | |
| Benzaldehyde | ND | 280 | ug/Kg | 03/03/15 | DD | SW8270D | |
| Benzo(a)pyrene | ND | 280 | ug/Kg | 03/03/15 | DD | SW8270D | |
| Benzo(b)fluoranthene | ND | 280 | ug/Kg | 03/03/15 | DD | SW8270D | |
| Benzo(ghi)perylene | ND | 280 | ug/Kg | 03/03/15 | DD | SW8270D | |
| Benzo(k)fluoranthene | ND | 280 | ug/Kg | 03/03/15 | DD | SW8270D | |
| Benzyl butyl phthalate | ND | 280 | ug/Kg | 03/03/15 | DD | SW8270D | |
| Bis(2-chloroethoxy)methane | ND | 280 | ug/Kg | 03/03/15 | DD | SW8270D | |
| Bis(2-chloroethyl)ether | ND | 410 | ug/Kg | 03/03/15 | DD | SW8270D | |
| Bis(2-chloroisopropyl)ether | ND | 280 | ug/Kg | 03/03/15 | DD | SW8270D | 1 |
| Bis(2-ethylhexyl)phthalate | ND | 280 | ug/Kg | 03/03/15 | DD | SW8270D | |
| Caprolactam | ND | 280 | ug/Kg | 03/03/15 | DD | SW8270D | |
| Carbazole | ND | 1200 | ug/Kg | 03/03/15 | DD | SW8270D | |
| Chrysene | ND | 280 | ug/Kg | 03/03/15 | DD | SW8270D | |
| Dibenz(a,h)anthracene | ND | 280 | ug/Kg | 03/03/15 | DD | SW8270D | |
| Dibenzofuran | ND | 280 | ug/Kg | 03/03/15 | DD | SW8270D | |
| Diethyl phthalate | ND | 280 | ug/Kg | 03/03/15 | DD | SW8270D | |
| Dimethylphthalate | ND | 280 | ug/Kg | 03/03/15 | DD | SW8270D | |
| Di-n-butylphthalate | ND | 280 | ug/Kg | 03/03/15 | DD | SW8270D | |
| Di-n-octylphthalate | ND | 280 | ug/Kg | 03/03/15 | DD | SW8270D | |
| Fluoranthene | 450 | 280 | ug/Kg | 03/03/15 | DD | SW8270D | |
| Fluorene | ND | 280 | ug/Kg | 03/03/15 | DD | SW8270D | |
| Hexachlorobenzene | ND | 280 | ug/Kg | 03/03/15 | DD | SW8270D | |
| Hexachlorobutadiene | ND | 280 | ug/Kg | 03/03/15 | DD | SW8270D | |
| Hexachlorocyclopentadiene | ND | 280 | ug/Kg | 03/03/15 | DD | SW8270D | |
| Hexachloroethane | ND | 280 | ug/Kg | 03/03/15 | DD | SW8270D | |
| Indeno(1,2,3-cd)pyrene | ND | 280 | ug/Kg | 03/03/15 | DD | SW8270D | |
| Isophorone | ND | 280 | ug/Kg | 03/03/15 | DD | SW8270D | |
| Naphthalene | ND | 280 | ug/Kg | 03/03/15 | DD | SW8270D | |
| Nitrobenzene | ND | 280 | ug/Kg | 03/03/15 | DD | SW8270D | |
| N-Nitrosodimethylamine | ND | 410 | ug/Kg | 03/03/15 | DD | SW8270D | |
| N-Nitrosodi-n-propylamine | ND | 280 | ug/Kg | 03/03/15 | DD | SW8270D | |
| N-Nitrosodiphenylamine | ND | 410 | ug/Kg | 03/03/15 | DD | SW8270D | |
| Pentachlorophenol | ND | 410 | ug/Kg | 03/03/15 | DD | SW8270D | |
| Phenanthrene | 330 | 280 | ug/Kg | 03/03/15 | DD | SW8270D | |
| Phenol | ND | 280 | ug/Kg | 03/03/15 | DD | SW8270D | |
| Pyrene | 410 | 280 | ug/Kg | 03/03/15 | DD | SW8270D | |
| **QA/QC Surrogates** | | | | | | | |
| % 2,4,6-Tribromophenol | 89 | | % | 03/03/15 | DD | 30 - 130 % | |

Project ID: 109 MARBLEDALE RD TUCKAHOE NY
Client ID: TB-13 26-28

Phoenix I.D.: BH78391

| Parameter | Result | RL/ PQL | Units | Date/Time | By | Reference |
|---|---|---|---|---|---|---|
| % 2-Fluorobiphenyl | 83 | | % | 03/03/15 | DD | 30 - 130 % |
| % 2-Fluorophenol | 72 | | % | 03/03/15 | DD | 30 - 130 % |
| % Nitrobenzene-d5 | 75 | | % | 03/03/15 | DD | 30 - 130 % |
| % Phenol-d5 | 77 | | % | 03/03/15 | DD | 30 - 130 % |
| % Terphenyl-d14 | 114 | | % | 03/03/15 | DD | 30 - 130 % |
| SVOA Library Search Top 15 | Completed | | | 03/03/15 | DD | |

1 = This parameter is not certified by NY NELAC for this matrix. NY NELAC does not offer certification for all parameters at this time.
3 = This parameter exceeds laboratory specified limits.

**RL/PQL=Reporting/Practical Quantitation Level (Equivalent to NELAC LOQ, Limit of Quanitation) ND=Not Detected BRL=Below Reporting Level**

## Comments:

Please be advised that the NY 375 soil criteria for chromium are based on hexavalent chromium and trivalent chromium.

Volatile Comment:

**Surrogate recoveries were outside control limits for volatiles due to matrix interference.

All soils, solids and sludges are reported on a dry weight basis unless otherwise noted in the sample comments.

If there are any questions regarding this data, please call Phoenix Client Services at extension 200.
This report must not be reproduced except in full as defined by the attached chain of custody.

**Phyllis Shiller, Laboratory Director**
**March 09, 2015**
**Reviewed and Released by: Phyllis Shiller, Laboratory Director**

1F
SEMIVOLATILE ORGANICS ANALYSIS DATA SHEET
TENTATIVELY IDENTIFIED COMPOUNDS

CLIENT ID

TB-13 4-6

Lab Name: Phoenix Environmental Labs  Client: HESNY-TUCK

Lab Code: Phoenix  Case No.:  SAS No.:  SDG No.: GBH78390

Matrix:(soil/water) SOIL  Lab Sample ID: BH78390

Sample wt/vol: 15.38 (g/mL) g  Lab File ID: 0304_20.D

Level: (low/med) Low  Date Received: 03/02/15

% Moisture: not dec. 16 decanted:(Y/N) NA  Date Extracted: 03/04/15

GPC Cleanup (Y/N): N  pH: NA  Date Analyzed: 3/4/2015

Conc. Extract Volume: 1000 (uL)  Dilution Factor 5

Injection Volume: 2 (uL)

Number TICs found: 3  CONCENTRATION UNITS: (ug/L or ug/KG) ug/Kg

| CAS NUMBER | COMPOUND NAME | RT | EST. CONC. | Q |
|---|---|---|---|---|
| 000123-42-2 | 2-Pentanone, 4-hydroxy-4-methyl- | 3.670 | 2900 | JNA |
| 000203-64-5 | 4H-Cyclopenta[def]phenanthrene | 13.780 | 1700 | JN |
| 000205-82-3 | Benzo[j]fluoranthene | 19.900 | 3200 | JN |

1F
SEMIVOLATILE ORGANICS ANALYSIS DATA SHEET
TENTATIVELY IDENTIFIED COMPOUNDS

CLIENT ID

TB-13 26-28

Lab Name: Phoenix Environmental Labs  Client: HESNY-TUCK

Lab Code: Phoenix  Case No.:  SAS No.:  SDG No.: GBH78390

Matrix:(soil/water) SOIL  Lab Sample ID: BH78391

Sample wt/vol: 15.4 (g/mL) g  Lab File ID: 0302_19.D

Level: (low/med) Low  Date Received: 03/02/15

% Moisture: not dec. 20 decanted:(Y/N) NA  Date Extracted: 03/03/15

GPC Cleanup (Y/N): N pH: NA  Date Analyzed: 3/3/2015

Conc. Extract Volume: 1000 (uL)  Dilution Factor 1

Injection Volume: 2 (uL)

Number TICs found: 2  CONCENTRATION UNITS: (ug/L or ug/KG) ug/Kg

| CAS NUMBER | COMPOUND NAME | RT | EST. CONC. | Q |
|---|---|---|---|---|
| 000123-42-2 | 2-Pentanone, 4-hydroxy-4-methyl- | 3.763 | 1500 | JNA |
| | Unknown | 15.480 | 590 | JN |

FORM I SEMIVOA-TIC

PHOENIX

Environmental Laboratories, Inc.
587 East Middle Turnpike, P.O.Box 370, Manchester, CT 06045
Tel. (860) 645-1102 Fax (860) 645-0823

ACCREDITED IN ACCORDANCE WITH nelac
NY # 11301

# QA/QC Report

March 09, 2015

## QA/QC Data

SDG I.D.: GBH78390

| Parameter | Blank | Sample Result | Dup Result | Dup RPD | LCS % | LCSD % | LCS RPD | MS % | MSD % | MS RPD | % Rec Limits | % RPD Limits | |
|---|---|---|---|---|---|---|---|---|---|---|---|---|---|
| QA/QC Batch 300603, QC Sample No: BH78166 (BH78390, BH78391) | | | | | | | | | | | | | |
| Mercury - Soil | BRL | <0.03 | <0.03 | NC | 97.0 | 101 | 4.0 | 105 | 98.8 | 6.1 | 70 - 130 | 30 | |
| **Comment:** | | | | | | | | | | | | | |
| Additional Mercury criteria: LCS acceptance range for waters is 80-120% and for soils is 70-130%. | | | | | | | | | | | | | |
| QA/QC Batch 300557, QC Sample No: BH78307 (BH78390, BH78391) | | | | | | | | | | | | | |
| **ICP Metals - Soil** | | | | | | | | | | | | | |
| Aluminum | BRL | 5790 | 6480 | 11.2 | 103 | 99.1 | 3.9 | NC | NC | NC | 75 - 125 | 30 | |
| Antimony | BRL | <1.8 | <3.6 | NC | 105 | 110 | 4.7 | 88.6 | 90.4 | 2.0 | 75 - 125 | 30 | |
| Arsenic | BRL | 1.3 | 1.47 | NC | 99.2 | 97.0 | 2.2 | 92.0 | 94.5 | 2.7 | 75 - 125 | 30 | |
| Barium | BRL | 62.5 | 49.3 | 23.6 | 111 | 112 | 0.9 | 91.1 | 94.3 | 3.5 | 75 - 125 | 30 | |
| Beryllium | BRL | 0.31 | 0.33 | NC | 103 | 101 | 2.0 | 96.6 | 94.6 | 2.1 | 75 - 125 | 30 | |
| Cadmium | BRL | <0.36 | <0.36 | NC | 88.6 | 89.6 | 1.1 | 92.6 | 95.9 | 3.5 | 75 - 125 | 30 | |
| Calcium | BRL | 310 | 385 | 21.6 | 103 | 102 | 1.0 | >130 | >130 | NC | 75 - 125 | 30 | m |
| Chromium | BRL | 12.2 | 13.3 | 8.60 | 103 | 106 | 2.9 | 103 | 104 | 1.0 | 75 - 125 | 30 | |
| Cobalt | BRL | 5.19 | 6.00 | 14.5 | 88.1 | 89.9 | 2.0 | 96.4 | 99.4 | 3.1 | 75 - 125 | 30 | |
| Copper | BRL | 10.7 | 11.4 | 6.30 | 95.1 | 94.8 | 0.3 | 104 | 107 | 2.8 | 75 - 125 | 30 | |
| Iron | BRL | 13500 | 16000 | 16.9 | 87.9 | 90.3 | 2.7 | NC | NC | NC | 75 - 125 | 30 | |
| Lead | BRL | 4.6 | 4.32 | 6.30 | 91.5 | 93.9 | 2.6 | 93.6 | 96.8 | 3.4 | 75 - 125 | 30 | |
| Magnesium | BRL | 1310 | 1530 | 15.5 | 103 | 102 | 1.0 | NC | NC | NC | 75 - 125 | 30 | |
| Manganese | BRL | 503 | 462 | 8.50 | 111 | 110 | 0.9 | 105 | 65.4 | 46.5 | 75 - 125 | 30 | m,r |
| Nickel | BRL | 8.91 | 9.24 | 3.60 | 101 | 102 | 1.0 | 96.1 | 99.4 | 3.4 | 75 - 125 | 30 | |
| Potassium | BRL | 686 | 653 | 4.90 | 96.4 | 90.9 | 5.9 | >130 | >130 | NC | 75 - 125 | 30 | m |
| Selenium | BRL | <1.4 | <1.4 | NC | 87.8 | 89.2 | 1.6 | 79.3 | 82.1 | 3.5 | 75 - 125 | 30 | |
| Silver | BRL | <0.36 | <0.36 | NC | 102 | 103 | 1.0 | 96.9 | 100 | 3.1 | 75 - 125 | 30 | |
| Sodium | BRL | 414 | 459 | 10.3 | 109 | 103 | 5.7 | >130 | >130 | NC | 75 - 125 | 30 | m |
| Thallium | BRL | <1.4 | <3.2 | NC | 100 | 101 | 1.0 | 94.8 | 98.0 | 3.3 | 75 - 125 | 30 | |
| Vanadium | BRL | 20.2 | 22.7 | 11.7 | 110 | 115 | 4.4 | 104 | 105 | 1.0 | 75 - 125 | 30 | |
| Zinc | BRL | 19.2 | 21.1 | 9.40 | 91.8 | 91.7 | 0.1 | 95.6 | 98.4 | 2.9 | 75 - 125 | 30 | |

m = This parameter is outside laboratory ms/msd specified recovery limits.
r = This parameter is outside laboratory rpd specified recovery limits.

PHOENIX
Environmental Laboratories, Inc.
587 East Middle Turnpike, P.O.Box 370, Manchester, CT 06045
Tel. (860) 645-1102 Fax (860) 645-0823

ACCREDITED IN ACCORDANCE WITH nelac
NY # 11301

# QA/QC Report

March 09, 2015

## QA/QC Data

SDG I.D.: GBH78390

| Parameter | Blank | Sample Result | Dup Result | Dup RPD | LCS % | LCSD % | LCS RPD | MS % | MSD % | MS RPD | % Rec Limits | % RPD Limits |
|---|---|---|---|---|---|---|---|---|---|---|---|---|
| QA/QC Batch 300799, QC Sample No: BH78389 (BH78390, BH78391) | | | | | | | | | | | | |
| Total Cyanide | BRL | 2.93 | 3.36 | 13.7 | 103 | | | 101 | | | 85 - 115 | 30 |

PHOENIX

Environmental Laboratories, Inc.
587 East Middle Turnpike, P.O.Box 370, Manchester, CT 06045
Tel. (860) 645-1102 Fax (860) 645-0823

ACCREDITED IN ACCORDANCE WITH nelac
NY # 11301

# QA/QC Report

March 09, 2015

## QA/QC Data

SDG I.D.: GBH78390

| Parameter | Blank | LCS % | LCSD % | LCS RPD | MS % | MSD % | MS RPD | % Rec Limits | % RPD Limits | |
|---|---|---|---|---|---|---|---|---|---|---|
| QA/QC Batch 300444, QC Sample No: BH77859 (BH78390, BH78391) | | | | | | | | | | |
| **Semivolatiles - Solid** | | | | | | | | | | |
| 1,1-Biphenyl | ND | 76 | 79 | 3.9 | 84 | 83 | 1.2 | 30 - 130 | 30 | |
| 1,2,4,5-Tetrachlorobenzene | ND | 77 | 82 | 6.3 | 84 | 86 | 2.4 | 30 - 130 | 30 | |
| 2,3,4,6-tetrachlorophenol | ND | 94 | 98 | 4.2 | 104 | 104 | 0.0 | 30 - 130 | 30 | |
| 2,4,5-Trichlorophenol | ND | 88 | 92 | 4.4 | 98 | 98 | 0.0 | 30 - 130 | 30 | |
| 2,4,6-Trichlorophenol | ND | 87 | 91 | 4.5 | 94 | 94 | 0.0 | 30 - 130 | 30 | |
| 2,4-Dichlorophenol | ND | 82 | 88 | 7.1 | 89 | 91 | 2.2 | 30 - 130 | 30 | |
| 2,4-Dimethylphenol | ND | 78 | 80 | 2.5 | 81 | 77 | 5.1 | 30 - 130 | 30 | |
| 2,4-Dinitrophenol | ND | 26 | 31 | 17.5 | 18 | 21 | 15.4 | 30 - 130 | 30 | l,m |
| 2,4-Dinitrotoluene | ND | 88 | 90 | 2.2 | 94 | 94 | 0.0 | 30 - 130 | 30 | |
| 2,6-Dinitrotoluene | ND | 86 | 90 | 4.5 | 94 | 94 | 0.0 | 30 - 130 | 30 | |
| 2-Chloronaphthalene | ND | 77 | 81 | 5.1 | 85 | 85 | 0.0 | 30 - 130 | 30 | |
| 2-Chlorophenol | ND | 75 | 81 | 7.7 | 83 | 84 | 1.2 | 30 - 130 | 30 | |
| 2-Methylnaphthalene | ND | 80 | 85 | 6.1 | 87 | 89 | 2.3 | 30 - 130 | 30 | |
| 2-Methylphenol (o-cresol) | ND | 74 | 79 | 6.5 | 79 | 80 | 1.3 | 30 - 130 | 30 | |
| 2-Nitroaniline | ND | 89 | 95 | 6.5 | 86 | 91 | 5.6 | 30 - 130 | 30 | |
| 2-Nitrophenol | ND | 79 | 84 | 6.1 | 88 | 90 | 2.2 | 30 - 130 | 30 | |
| 3&4-Methylphenol (m&p-cresol) | ND | 82 | 87 | 5.9 | 86 | 88 | 2.3 | 30 - 130 | 30 | |
| 3,3'-Dichlorobenzidine | ND | 76 | 82 | 7.6 | 77 | 78 | 1.3 | 30 - 130 | 30 | |
| 3-Nitroaniline | ND | 85 | 89 | 4.6 | 87 | 92 | 5.6 | 30 - 130 | 30 | |
| 4,6-Dinitro-2-methylphenol | ND | 49 | 57 | 15.1 | 75 | 78 | 3.9 | 30 - 130 | 30 | |
| 4-Bromophenyl phenyl ether | ND | 81 | 85 | 4.8 | 92 | 90 | 2.2 | 30 - 130 | 30 | |
| 4-Chloro-3-methylphenol | ND | 88 | 93 | 5.5 | 94 | 96 | 2.1 | 30 - 130 | 30 | |
| 4-Chloroaniline | ND | 74 | 77 | 4.0 | 76 | 77 | 1.3 | 30 - 130 | 30 | |
| 4-Chlorophenyl phenyl ether | ND | 81 | 84 | 3.6 | 88 | 87 | 1.1 | 30 - 130 | 30 | |
| 4-Nitroaniline | ND | 85 | 90 | 5.7 | 92 | 93 | 1.1 | 30 - 130 | 30 | |
| 4-Nitrophenol | ND | 93 | 100 | 7.3 | 97 | 98 | 1.0 | 30 - 130 | 30 | |
| Acenaphthene | ND | 84 | 88 | 4.7 | 91 | 90 | 1.1 | 30 - 130 | 30 | |
| Acenaphthylene | ND | 78 | 81 | 3.8 | 85 | 84 | 1.2 | 30 - 130 | 30 | |
| Acetophenone | ND | 78 | 83 | 6.2 | 84 | 86 | 2.4 | 30 - 130 | 30 | |
| Anthracene | ND | 81 | 87 | 7.1 | 91 | 89 | 2.2 | 30 - 130 | 30 | |
| Atrazine | ND | 80 | 82 | 2.5 | 91 | 82 | 10.4 | 30 - 130 | 30 | |
| Benz(a)anthracene | ND | 84 | 89 | 5.8 | 90 | 90 | 0.0 | 30 - 130 | 30 | |
| Benzaldehyde | ND | 53 | 63 | 17.2 | 125 | 141 | 12.0 | 30 - 130 | 30 | m |
| Benzo(a)pyrene | ND | 81 | 86 | 6.0 | 89 | 89 | 0.0 | 30 - 130 | 30 | |
| Benzo(b)fluoranthene | ND | 78 | 82 | 5.0 | 88 | 85 | 3.5 | 30 - 130 | 30 | |
| Benzo(ghi)perylene | ND | 90 | 96 | 6.5 | 101 | 99 | 2.0 | 30 - 130 | 30 | |
| Benzo(k)fluoranthene | ND | 81 | 87 | 7.1 | 88 | 89 | 1.1 | 30 - 130 | 30 | |
| Benzyl butyl phthalate | ND | 85 | 88 | 3.5 | 97 | 92 | 5.3 | 30 - 130 | 30 | |
| Bis(2-chloroethoxy)methane | ND | 80 | 83 | 3.7 | 86 | 86 | 0.0 | 30 - 130 | 30 | |
| Bis(2-chloroethyl)ether | ND | 64 | 68 | 6.1 | 68 | 71 | 4.3 | 30 - 130 | 30 | |
| Bis(2-chloroisopropyl)ether | ND | 66 | 70 | 5.9 | 72 | 73 | 1.4 | 30 - 130 | 30 | |

# QA/QC Data

SDG I.D.: GBH78390

| Parameter | Blank | LCS % | LCSD % | LCS RPD | MS % | MSD % | MS RPD | % Rec Limits | % RPD Limits |
|---|---|---|---|---|---|---|---|---|---|
| Bis(2-ethylhexyl)phthalate | ND | 85 | 88 | 3.5 | 96 | 91 | 5.3 | 30 - 130 | 30 |
| Caprolactam | ND | 78 | 80 | 2.5 | 87 | 87 | 0.0 | 30 - 130 | 30 |
| Carbazole | ND | 84 | 89 | 5.8 | 92 | 87 | 5.6 | 30 - 130 | 30 |
| Chrysene | ND | 88 | 93 | 5.5 | 95 | 96 | 1.0 | 30 - 130 | 30 |
| Dibenz(a,h)anthracene | ND | 89 | 95 | 6.5 | 101 | 98 | 3.0 | 30 - 130 | 30 |
| Dibenzofuran | ND | 83 | 88 | 5.8 | 90 | 90 | 0.0 | 30 - 130 | 30 |
| Diethyl phthalate | ND | 85 | 85 | 0.0 | 91 | 89 | 2.2 | 30 - 130 | 30 |
| Dimethylphthalate | ND | 83 | 85 | 2.4 | 91 | 89 | 2.2 | 30 - 130 | 30 |
| Di-n-butylphthalate | ND | 77 | 80 | 3.8 | 88 | 80 | 9.5 | 30 - 130 | 30 |
| Di-n-octylphthalate | ND | 90 | 95 | 5.4 | 97 | 97 | 0.0 | 30 - 130 | 30 |
| Fluoranthene | ND | 79 | 85 | 7.3 | 90 | 86 | 4.5 | 30 - 130 | 30 |
| Fluorene | ND | 82 | 85 | 3.6 | 89 | 88 | 1.1 | 30 - 130 | 30 |
| Hexachlorobenzene | ND | 79 | 82 | 3.7 | 90 | 84 | 6.9 | 30 - 130 | 30 |
| Hexachlorobutadiene | ND | 74 | 77 | 4.0 | 82 | 82 | 0.0 | 30 - 130 | 30 |
| Hexachlorocyclopentadiene | ND | 90 | 100 | 10.5 | 91 | 102 | 11.4 | 30 - 130 | 30 |
| Hexachloroethane | ND | 66 | 71 | 7.3 | 72 | 73 | 1.4 | 30 - 130 | 30 |
| Indeno(1,2,3-cd)pyrene | ND | 89 | 96 | 7.6 | 101 | 99 | 2.0 | 30 - 130 | 30 |
| Isophorone | ND | 75 | 77 | 2.6 | 81 | 80 | 1.2 | 30 - 130 | 30 |
| Naphthalene | ND | 74 | 80 | 7.8 | 81 | 83 | 2.4 | 30 - 130 | 30 |
| Nitrobenzene | ND | 73 | 79 | 7.9 | 79 | 82 | 3.7 | 30 - 130 | 30 |
| N-Nitrosodimethylamine | ND | 58 | 62 | 6.7 | 63 | 63 | 0.0 | 30 - 130 | 30 |
| N-Nitrosodi-n-propylamine | ND | 76 | 80 | 5.1 | 82 | 83 | 1.2 | 30 - 130 | 30 |
| N-Nitrosodiphenylamine | ND | 85 | 87 | 2.3 | 89 | 91 | 2.2 | 30 - 130 | 30 |
| Pentachlorophenol | ND | 104 | 114 | 9.2 | 127 | 124 | 2.4 | 30 - 130 | 30 |
| Phenanthrene | ND | 82 | 86 | 4.8 | 91 | 88 | 3.4 | 30 - 130 | 30 |
| Phenol | ND | 71 | 77 | 8.1 | 77 | 79 | 2.6 | 30 - 130 | 30 |
| Pyrene | ND | 79 | 83 | 4.9 | 90 | 85 | 5.7 | 30 - 130 | 30 |
| % 2,4,6-Tribromophenol | 100 | 83 | 88 | 5.8 | 92 | 91 | 1.1 | 30 - 130 | 30 |
| % 2-Fluorobiphenyl | 77 | 75 | 79 | 5.2 | 83 | 83 | 0.0 | 30 - 130 | 30 |
| % 2-Fluorophenol | 64 | 70 | 75 | 6.9 | 76 | 77 | 1.3 | 30 - 130 | 30 |
| % Nitrobenzene-d5 | 67 | 71 | 78 | 9.4 | 77 | 80 | 3.8 | 30 - 130 | 30 |
| % Phenol-d5 | 70 | 73 | 79 | 7.9 | 79 | 81 | 2.5 | 30 - 130 | 30 |
| % Terphenyl-d14 | 88 | 84 | 90 | 6.9 | 98 | 93 | 5.2 | 30 - 130 | 30 |

**Comment:**

Additional 8270 criteria: 20% of compounds can be outside of acceptance criteria as long as recovery is at least 10%. (Acid surrogates acceptance range for aqueous samples: 15-110%, for soils 30-130%)

QA/QC Batch 300456, QC Sample No: BH78084 (BH78390, BH78391)

## Polychlorinated Biphenyls - Solid

| | | | | | | | | | |
|---|---|---|---|---|---|---|---|---|---|
| PCB-1016 | ND | 95 | 95 | 0.0 | 92 | 89 | 3.3 | 40 - 140 | 30 |
| PCB-1221 | ND | | | | | | | 40 - 140 | 30 |
| PCB-1232 | ND | | | | | | | 40 - 140 | 30 |
| PCB-1242 | ND | | | | | | | 40 - 140 | 30 |
| PCB-1248 | ND | | | | | | | 40 - 140 | 30 |
| PCB-1254 | ND | | | | | | | 40 - 140 | 30 |
| PCB-1260 | ND | 99 | 99 | 0.0 | 96 | 95 | 1.0 | 40 - 140 | 30 |
| PCB-1262 | ND | | | | | | | 40 - 140 | 30 |
| PCB-1268 | ND | | | | | | | 40 - 140 | 30 |
| % DCBP (Surrogate Rec) | 83 | 103 | 102 | 1.0 | 99 | 97 | 2.0 | 30 - 150 | 30 |
| % TCMX (Surrogate Rec) | 69 | 102 | 102 | 0.0 | 94 | 92 | 2.2 | 30 - 150 | 30 |

QA/QC Batch 300840, QC Sample No: BH78836 (BH78390, BH78391)

## Volatiles (TCL) - Solid

| | | | | | | | | | |
|---|---|---|---|---|---|---|---|---|---|
| 1,1,1-Trichloroethane | ND | 102 | 111 | 8.5 | 112 | 103 | 8.4 | 70 - 130 | 30 |

# QA/QC Data

SDG I.D.: GBH78390

| Parameter | Blank | LCS % | LCSD % | LCS RPD | MS % | MSD % | MS RPD | % Rec Limits | % RPD Limits | |
|---|---|---|---|---|---|---|---|---|---|---|
| 1,1,2,2-Tetrachloroethane | ND | 116 | 124 | 6.7 | 136 | 108 | 23.0 | 70 - 130 | 30 | m |
| 1,1,2-Trichloroethane | ND | 97 | 105 | 7.9 | 106 | 94 | 12.0 | 70 - 130 | 30 | |
| 1,1-Dichloroethane | ND | 105 | 112 | 6.5 | 114 | 105 | 8.2 | 70 - 130 | 30 | |
| 1,1-Dichloroethene | ND | 105 | 114 | 8.2 | 114 | 101 | 12.1 | 70 - 130 | 30 | |
| 1,2,3-Trichlorobenzene | ND | 100 | 110 | 9.5 | 94 | 77 | 19.9 | 70 - 130 | 30 | |
| 1,2,4-Trichlorobenzene | ND | 98 | 109 | 10.6 | 95 | 77 | 20.9 | 70 - 130 | 30 | |
| 1,2-Dibromo-3-chloropropane | ND | 105 | 113 | 7.3 | 123 | 95 | 25.7 | 70 - 130 | 30 | |
| 1,2-Dibromoethane | ND | 98 | 106 | 7.8 | 105 | 94 | 11.1 | 70 - 130 | 30 | |
| 1,2-Dichlorobenzene | ND | 102 | 112 | 9.3 | 111 | 91 | 19.8 | 70 - 130 | 30 | |
| 1,2-Dichloroethane | ND | 97 | 105 | 7.9 | 103 | 93 | 10.2 | 70 - 130 | 30 | |
| 1,2-Dichloropropane | ND | 104 | 112 | 7.4 | 111 | 103 | 7.5 | 70 - 130 | 30 | |
| 1,3-Dichlorobenzene | ND | 100 | 112 | 11.3 | 112 | 93 | 18.5 | 70 - 130 | 30 | |
| 1,4-Dichlorobenzene | ND | 106 | 118 | 10.7 | 119 | 97 | 20.4 | 70 - 130 | 30 | |
| 1,4-dioxane | ND | 109 | 103 | 5.7 | 119 | 110 | 7.9 | 70 - 130 | 30 | |
| 2-Hexanone | ND | 96 | 105 | 9.0 | 104 | 85 | 20.1 | 70 - 130 | 30 | |
| 4-Methyl-2-pentanone | ND | 99 | 105 | 5.9 | 105 | 90 | 15.4 | 70 - 130 | 30 | |
| Acetone | ND | 101 | 106 | 4.8 | 87 | 73 | 17.5 | 70 - 130 | 30 | |
| Benzene | ND | 103 | 111 | 7.5 | 111 | 101 | 9.4 | 70 - 130 | 30 | |
| Bromochloromethane | ND | 104 | 114 | 9.2 | 110 | 98 | 11.5 | 70 - 130 | 30 | |
| Bromodichloromethane | ND | 105 | 112 | 6.5 | 107 | 97 | 9.8 | 70 - 130 | 30 | |
| Bromoform | ND | 98 | 109 | 10.6 | 104 | 92 | 12.2 | 70 - 130 | 30 | |
| Bromomethane | ND | 94 | 106 | 12.0 | 106 | 96 | 9.9 | 70 - 130 | 30 | |
| Carbon Disulfide | ND | 123 | 134 | 8.6 | 116 | 106 | 9.0 | 70 - 130 | 30 | l |
| Carbon tetrachloride | ND | 100 | 108 | 7.7 | 106 | 99 | 6.8 | 70 - 130 | 30 | |
| Chlorobenzene | ND | 102 | 112 | 9.3 | 112 | 100 | 11.3 | 70 - 130 | 30 | |
| Chloroethane | ND | 94 | 100 | 6.2 | 109 | 101 | 7.6 | 70 - 130 | 30 | |
| Chloroform | ND | 102 | 111 | 8.5 | 111 | 101 | 9.4 | 70 - 130 | 30 | |
| Chloromethane | ND | 107 | 113 | 5.5 | 119 | 108 | 9.7 | 70 - 130 | 30 | |
| cis-1,2-Dichloroethene | ND | 107 | 114 | 6.3 | 113 | 102 | 10.2 | 70 - 130 | 30 | |
| cis-1,3-Dichloropropene | ND | 107 | 117 | 8.9 | 108 | 98 | 9.7 | 70 - 130 | 30 | |
| Cyclohexane | ND | 97 | 103 | 6.0 | 119 | 109 | 8.8 | 70 - 130 | 30 | |
| Dibromochloromethane | ND | 105 | 113 | 7.3 | 110 | 97 | 12.6 | 70 - 130 | 30 | |
| Dichlorodifluoromethane | ND | 107 | 116 | 8.1 | 117 | 108 | 8.0 | 70 - 130 | 30 | |
| Ethylbenzene | ND | 105 | 116 | 10.0 | 118 | 104 | 12.6 | 70 - 130 | 30 | |
| Isopropylbenzene | ND | 103 | 113 | 9.3 | 128 | 106 | 18.8 | 70 - 130 | 30 | |
| m&p-Xylene | ND | 103 | 113 | 9.3 | 116 | 102 | 12.8 | 70 - 130 | 30 | |
| Methyl ethyl ketone | ND | 94 | 98 | 4.2 | 97 | 82 | 16.8 | 70 - 130 | 30 | |
| Methyl t-butyl ether (MTBE) | ND | 98 | 106 | 7.8 | 101 | 92 | 9.3 | 70 - 130 | 30 | |
| Methylacetate | ND | 100 | 109 | 8.6 | 92 | 78 | 16.5 | 70 - 130 | 30 | |
| Methylcyclohexane | ND | 93 | 100 | 7.3 | 112 | 101 | 10.3 | 70 - 130 | 30 | |
| Methylene chloride | ND | 101 | 108 | 6.7 | 99 | 91 | 8.4 | 70 - 130 | 30 | |
| o-Xylene | ND | 105 | 115 | 9.1 | 116 | 103 | 11.9 | 70 - 130 | 30 | |
| Styrene | ND | 105 | 115 | 9.1 | 111 | 99 | 11.4 | 70 - 130 | 30 | |
| Tetrachloroethene | ND | 100 | 112 | 11.3 | 115 | 102 | 12.0 | 70 - 130 | 30 | |
| Toluene | ND | 101 | 109 | 7.6 | 109 | 100 | 8.6 | 70 - 130 | 30 | |
| trans-1,2-Dichloroethene | ND | 108 | 118 | 8.8 | 114 | 105 | 8.2 | 70 - 130 | 30 | |
| trans-1,3-Dichloropropene | ND | 108 | 117 | 8.0 | 106 | 97 | 8.9 | 70 - 130 | 30 | |
| Trichloroethene | ND | 99 | 106 | 6.8 | 107 | 97 | 9.8 | 70 - 130 | 30 | |
| Trichlorofluoromethane | ND | 100 | 110 | 9.5 | 111 | 102 | 8.5 | 70 - 130 | 30 | |
| Trichlorotrifluoroethane | ND | 104 | 112 | 7.4 | 114 | 104 | 9.2 | 70 - 130 | 30 | |
| Vinyl chloride | ND | 102 | 110 | 7.5 | 119 | 110 | 7.9 | 70 - 130 | 30 | |
| % 1,2-dichlorobenzene-d4 | 102 | 101 | 100 | 1.0 | 100 | 99 | 1.0 | 70 - 130 | 30 | |
| % Bromofluorobenzene | 96 | 100 | 100 | 0.0 | 98 | 99 | 1.0 | 70 - 130 | 30 | |

# QA/QC Data

SDG I.D.: GBH78390

| Parameter | Blank | LCS % | LCSD % | LCS RPD | MS % | MSD % | MS RPD | % Rec Limits | % RPD Limits |
|---|---|---|---|---|---|---|---|---|---|
| % Dibromofluoromethane | 100 | 103 | 101 | 2.0 | 99 | 98 | 1.0 | 70 - 130 | 30 |
| % Toluene-d8 | 95 | 101 | 100 | 1.0 | 99 | 100 | 1.0 | 70 - 130 | 30 |

**Comment:**

Additional 8260 criteria: 10% of LCS/LCSD compounds can be outside of acceptance criteria as long as recovery is 40-160%.

l = This parameter is outside laboratory lcs/lcsd specified recovery limits.
m = This parameter is outside laboratory ms/msd specified recovery limits.

**If there are any questions regarding this data, please call Phoenix Client Services at extension 200.**

RPD - Relative Percent Difference
LCS - Laboratory Control Sample
LCSD - Laboratory Control Sample Duplicate
MS - Matrix Spike
MS Dup - Matrix Spike Duplicate
NC - No Criteria
Intf - Interference

Phyllis Shiller, Laboratory Director
March 09, 2015

# Sample Criteria Exceedences Report

## GBH78390 - HESNY-TUCK



Criteria: NY: 375, 375RRS, 375RS

State: NY

| SampNo | Acode | Phoenix Analyte | Criteria | Result | RL | Criteria | RL Criteria | Analysis Units |
|---|---|---|---|---|---|---|---|---|
| BH78390 | $8270_TCLR | Chrysene | NY / 375-6.8 Semivolatiles / Residential | 5600 | 1400 | 1000 | 1000 | ug/Kg |
| BH78390 | $8270_TCLR | Benz(a)anthracene | NY / 375-6.8 Semivolatiles / Residential | 5900 | 1400 | 1000 | 1000 | ug/Kg |
| BH78390 | $8270_TCLR | Benzo(a)pyrene | NY / 375-6.8 Semivolatiles / Residential | 5200 | 1400 | 1000 | 1000 | ug/Kg |
| BH78390 | $8270_TCLR | Benzo(b)fluoranthene | NY / 375-6.8 Semivolatiles / Residential | 6400 | 1400 | 1000 | 1000 | ug/Kg |
| BH78390 | $8270_TCLR | Benzo(k)fluoranthene | NY / 375-6.8 Semivolatiles / Residential | 2200 | 1400 | 1000 | 1000 | ug/Kg |
| BH78390 | $8270_TCLR | Indeno(1,2,3-cd)pyrene | NY / 375-6.8 Semivolatiles / Residential | 1900 | 1400 | 500 | 500 | ug/Kg |
| BH78390 | $8270_TCLR | Dibenz(a,h)anthracene | NY / 375-6.8 Semivolatiles / Residential | ND | 1400 | 330 | 330 | ug/Kg |
| BH78390 | $8270_TCLR | Benz(a)anthracene | NY / 375-6.8 Semivolatiles / Residential Restricted | 5900 | 1400 | 1000 | 1000 | ug/Kg |
| BH78390 | $8270_TCLR | Benzo(a)pyrene | NY / 375-6.8 Semivolatiles / Residential Restricted | 5200 | 1400 | 1000 | 1000 | ug/Kg |
| BH78390 | $8270_TCLR | Benzo(b)fluoranthene | NY / 375-6.8 Semivolatiles / Residential Restricted | 6400 | 1400 | 1000 | 1000 | ug/Kg |
| BH78390 | $8270_TCLR | Chrysene | NY / 375-6.8 Semivolatiles / Residential Restricted | 5600 | 1400 | 3900 | 3900 | ug/Kg |
| BH78390 | $8270_TCLR | Indeno(1,2,3-cd)pyrene | NY / 375-6.8 Semivolatiles / Residential Restricted | 1900 | 1400 | 500 | 500 | ug/Kg |
| BH78390 | $8270_TCLR | Dibenz(a,h)anthracene | NY / 375-6.8 Semivolatiles / Residential Restricted | ND | 1400 | 330 | 330 | ug/Kg |
| BH78390 | $8270_TCLR | Benzo(b)fluoranthene | NY / 375-6.8 Semivolatiles / Unrestricted Use Soil | 6400 | 1400 | 1000 | 1000 | ug/Kg |
| BH78390 | $8270_TCLR | Benz(a)anthracene | NY / 375-6.8 Semivolatiles / Unrestricted Use Soil | 5900 | 1400 | 1000 | 1000 | ug/Kg |
| BH78390 | $8270_TCLR | Benzo(a)pyrene | NY / 375-6.8 Semivolatiles / Unrestricted Use Soil | 5200 | 1400 | 1000 | 1000 | ug/Kg |
| BH78390 | $8270_TCLR | Chrysene | NY / 375-6.8 Semivolatiles / Unrestricted Use Soil | 5600 | 1400 | 1000 | 1000 | ug/Kg |
| BH78390 | $8270_TCLR | Pentachlorophenol | NY / 375-6.8 Semivolatiles / Unrestricted Use Soil | ND | 1900 | 800 | 800 | ug/Kg |
| BH78390 | $8270_TCLR | Indeno(1,2,3-cd)pyrene | NY / 375-6.8 Semivolatiles / Unrestricted Use Soil | 1900 | 1400 | 500 | 500 | ug/Kg |
| BH78390 | $8270_TCLR | Benzo(k)fluoranthene | NY / 375-6.8 Semivolatiles / Unrestricted Use Soil | 2200 | 1400 | 800 | 800 | ug/Kg |
| BH78390 | $8270_TCLR | 2-Methylphenol (o-cresol) | NY / 375-6.8 Semivolatiles / Unrestricted Use Soil | ND | 1400 | 330 | 330 | ug/Kg |
| BH78390 | $8270_TCLR | Dibenz(a,h)anthracene | NY / 375-6.8 Semivolatiles / Unrestricted Use Soil | ND | 1400 | 330 | 330 | ug/Kg |
| BH78390 | $8270_TCLR | Phenol | NY / 375-6.8 Semivolatiles / Unrestricted Use Soil | ND | 1400 | 330 | 330 | ug/Kg |
| BH78390 | HG-SM | Mercury | NY / 375-6.8 Metals / Unrestricted Use Soil | 0.32 | 0.03 | 0.18 | 0.18 | mg/Kg |
| BH78390 | PB-SM | Lead | NY / 375-6.8 Metals / Unrestricted Use Soil | 82.8 | 0.39 | 63 | 63 | mg/Kg |
| BH78390 | ZN-SM | Zinc | NY / 375-6.8 Metals / Unrestricted Use Soil | 215 | 3.9 | 109 | 109 | mg/Kg |
| BH78391 | $8260_TCL_SM | Acetone | NY / 375-6.8 Volatiles / Unrestricted Use Soil | 200 | 53 | 50 | 50 | ug/kg |
| BH78391 | CR-SM | Chromium | NY / 375-6.8 Metals / Unrestricted Use Soil | 31.4 | 0.37 | 30 | | mg/Kg |

Phoenix Laboratories does not assume responsibility for the data contained in this report. It is provided as an additional tool to identify requested criteria exceedences. All efforts are made to ensure the accuracy of the data (obtained from appropriate agencies). A lack of exceedence information does not necessarily suggest conformance to the criteria. It is ultimately the site professional's responsibility to determine appropriate compliance.

**Environmental Laboratories, Inc.**
**587 East Middle Turnpike, P.O.Box 370, Manchester, CT 06045**
**Tel. (860) 645-1102 Fax (860) 645-0823**

# NY Temperature Narration

**March 09, 2015**

**SDG I.D.: GBH78390**

The samples in this delivery group were received at 4°C.
(Note acceptance criteria is above freezing up to 6°C)

# PHOENIX
Environmental Laboratories, Inc.

## NY/NJ CHAIN OF CUSTODY RECORD

587 East Middle Turnpike, P.O. Box 370, Manchester, CT 06040
Email: info@phoenixlabs.com Fax (860) 645-0823
**Client Services (860) 645-8726**

Temp 4 cwk Pg 1 of 1

**Data Delivery:**
☐ Fax #:
☒ Email: info@hesny.com

Customer:
Address: HYDROENVIRONMENTAL SOLUTIONS
ONE DEANS BRIDGE ROAD
SOMERS, NEW YORK 10589

Project: 109 Marbledale Rd, Tuckahoe NY
Report to: Tim Carr
Invoice to:

Project P.O:
Phone #: 914-276-2560
Fax #: 914-276-2664

**Client Sample - Information - Identification**

Sampler's Signature: RC[illegible] Date: 2/26/15

**Matrix Code:**
DW=drinking water WW=wastewater S=soil/solid O=oil
GW=groundwater SL=sludge A=air X=other

Analysis Request

| Phoenix Sample # | Customer Sample Identification | Sample Matrix | Date Sampled | Time Sampled | TCL VOC | TCL SVOC | TCL PCB | Tal Metals | Cyanide | Arsenic | | | | | | Soil VOA ☒ Methanol [ ] S. Bisulfate ☒ H2O | GL Soil container (8) oz | GL Soil container ( ) oz | 40 ml VOA Vial [ ] As is [ ] HCl | GL Amber 1000ml [ ] As is [ ] H2SO4 | PL As is [ ] 1250ml [ ] 500ml [ ] 1000ml | PL H2SO4 [ ] 250ml [ ] 500ml | PL HNO3 250ml | PL NaOH 250ml | Bacteria Bottle |
|---|---|---|---|---|---|---|---|---|---|---|---|---|---|---|---|---|---|---|---|---|---|---|---|---|---|
| 78390 | TB-13(4-6) | S | 2/26/15 | | ↓ | ↓ | ↓ | ↓ | ↓ | ↓ | | | | | | 3 | 2 | | | | | | | | |
| 78391 | TB-13(26-28) | S | ↓ | | ↓ | ↓ | ↓ | ↓ | ↓ | ↓ | | | | | | 3 | 2 | | | | | | | | |

| Relinquished by: | Accepted by: | Date: | Time: |
|---|---|---|---|
| [illegible] | [illegible] | 3-2-15 | 12:60 |
| [illegible] | Monica [illegible] | 3/2/15 | 15:48 |

**Comments, Special Requirements or Regulations:**

**Turnaround:**
☐ 1 Day*
☐ 2 Days*
☐ 3 Days*
☒ Standard
☐ Other
* SURCHARGE APPLIES

**NJ**
☐ Res. Criteria
☐ Non-Res. Criteria
☐ Impact to GW Soil Cleanup Criteria
☐ GW Criteria

**NY**
☐ TAGM 4046 GW
☐ TAGM 4046 SOIL
☒ NY375 Unrestricted Soil
☒ NY375 Residential Soil
☒ NY375 Restricted Non-Residential Soil

**Data Format**
☐ Phoenix Std Report
☐ Excel
☒ PDF
☐ GIS/Key
☒ EQuIS
☐ NJ Hazsite EDD
☐ NY EZ EDD (ASP)
☐ Other

**Data Package**
☐ NJ Reduced Deliv. *
☐ NY Enhanced (ASP B) *
☐ Other

State where samples were collected: NY

PHOENIX
Environmental Laboratories, Inc.

Monday, March 09, 2015

Attn: Mr. Tim Carr
HydroEnvironmental Solutions, Inc.
One Deans Bridge Rd
Somers NY 10589

Project ID: 109 MARBLEDALE RD TUCKAHOE NY
Sample ID#s: BH78384 - BH78389

This laboratory is in compliance with the NELAC requirements of procedures used except where indicated.

This report contains results for the parameters tested, under the sampling conditions described on the Chain Of Custody, as received by the laboratory.

All soils, solids and sludges are reported on a dry weight basis unless otherwise noted in the sample comments.

A scanned version of the COC form accompanies the analytical report and is an exact duplicate of the original.

If you have any questions concerning this testing, please do not hesitate to contact Phoenix Client Services at ext. 200.

Sincerely yours,

Phyllis Shiller

Phyllis Shiller
Laboratory Director

NELAC - #NY11301
CT Lab Registration #PH-0618
MA Lab Registration #MA-CT-007
ME Lab Registration #CT-007
NH Lab Registration #213693-A,B
NJ Lab Registration #CT-003
NY Lab Registration #11301
PA Lab Registration #68-03530
RI Lab Registration #63
VT Lab Registration #VT11301

587 East Middle Turnpike, P.O. Box 370, Manchester, CT 06040
Telephone (860) 645-1102 Fax (860) 645-0823

PHOENIX

Environmental Laboratories, Inc.
587 East Middle Turnpike, P.O.Box 370, Manchester, CT 06045
Tel. (860) 645-1102 Fax (860) 645-0823

ACCREDITED IN ACCORDANCE WITH nelac
NY # 11301

# SDG Comments

March 09, 2015

SDG I.D.: GBH78384

---

Please be advised that the NY 375 soil criteria for chromium are based on hexavalent chromium and trivalent chromium.

PHOENIX

Environmental Laboratories, Inc.
587 East Middle Turnpike, P.O.Box 370, Manchester, CT 06045
Tel. (860) 645-1102 Fax (860) 645-0823

ACCREDITED IN ACCORDANCE WITH nelac NY # 11301

# Analysis Report

March 09, 2015

FOR: Attn: Mr. Tim Carr
HydroEnvironmental Solutions, Inc.
One Deans Bridge Rd
Somers NY 10589

| Sample Information | | Custody Information | | Date | Time |
|---|---|---|---|---|---|
| Matrix: | SOLID | Collected by: | RG | 02/26/15 | 0:00 |
| Location Code: | HESNY-TUCK | Received by: | SW | 03/02/15 | 15:48 |
| Rush Request: | 72 Hour | Analyzed by: | see "By" below | | |
| P.O.#: | | | | | |

## Laboratory Data

SDG ID: GBH78384
Phoenix ID: BH78384

Project ID: 109 MARBLEDALE RD TUCKAHOE NY
Client ID: TB-12 4-6

| Parameter | Result | RL/ PQL | Units | Date/Time | By | Reference |
|---|---|---|---|---|---|---|
| Silver | < 0.38 | 0.38 | mg/Kg | 03/03/15 | LK | SW6010C |
| Aluminum | 11400 | 56 | mg/Kg | 03/03/15 | EK | SW6010C |
| Arsenic | 2.7 | 0.8 | mg/Kg | 03/03/15 | LK | SW6010C |
| Barium | 92.2 | 0.38 | mg/Kg | 03/03/15 | LK | SW6010C |
| Beryllium | 0.38 | 0.30 | mg/Kg | 03/03/15 | LK | SW6010C |
| Calcium | 23900 | 56 | mg/Kg | 03/03/15 | EK | SW6010C |
| Cadmium | < 0.38 | 0.38 | mg/Kg | 03/03/15 | LK | SW6010C |
| Cobalt | 10.2 | 0.38 | mg/Kg | 03/03/15 | LK | SW6010C |
| Chromium | 25.9 | 0.38 | mg/Kg | 03/03/15 | LK | SW6010C |
| Copper | 28.0 | 0.38 | mg/kg | 03/03/15 | LK | SW6010C |
| Iron | 18600 | 56 | mg/Kg | 03/03/15 | EK | SW6010C |
| Mercury | 0.10 | 0.03 | mg/Kg | 03/03/15 | MA | SW7471B |
| Potassium | 3630 | 56 | mg/Kg | 03/03/15 | EK | SW6010C |
| Magnesium | 8150 | 56 | mg/Kg | 03/03/15 | EK | SW6010C |
| Manganese | 297 | 3.8 | mg/Kg | 03/03/15 | EK | SW6010C |
| Sodium | 209 | 5.6 | mg/Kg | 03/03/15 | LK | SW6010C |
| Nickel | 21.3 | 0.38 | mg/Kg | 03/03/15 | LK | SW6010C |
| Lead | 37.4 | 0.38 | mg/Kg | 03/03/15 | LK | SW6010C |
| Antimony | < 3.8 | 3.8 | mg/Kg | 03/03/15 | LK | SW6010C |
| Selenium | < 1.5 | 1.5 | mg/Kg | 03/03/15 | LK | SW6010C |
| Thallium | < 3.4 | 3.4 | mg/Kg | 03/03/15 | LK | SW6010C |
| Vanadium | 34.1 | 0.38 | mg/Kg | 03/03/15 | LK | SW6010C |
| Zinc | 64.5 | 0.38 | mg/Kg | 03/03/15 | LK | SW6010C |
| Percent Solid | 82 | | % | 03/02/15 | i | SW846-%Solid |
| Total Cyanide | < 0.61 | 0.61 | mg/Kg | 03/02/15 | O/EG | SW9010C/SW90 |
| Soil Extraction for PCB | Completed | | | 03/02/15 | CC/H | SW3545A |
| Soil Extraction for SVOA | Completed | | | 03/02/15 | CJ/VH | SW3545A |
| Mercury Digestion | Completed | | | 03/03/15 | I/I | SW7471B |

Project ID: 109 MARBLEDALE RD TUCKAHOE NY
Client ID: TB-12 4-6

Phoenix I.D.: BH78384

| Parameter | Result | RL/ PQL | Units | Date/Time | By | Reference |
|---|---|---|---|---|---|---|
| Total Metals Digest | Completed | | | 03/02/15 | CB/AG | SW3050B |
| **Polychlorinated Biphenyls** | | | | | | |
| PCB-1016 | ND | 79 | ug/Kg | 03/03/15 | AW | SW8082A |
| PCB-1221 | ND | 79 | ug/Kg | 03/03/15 | AW | SW8082A |
| PCB-1232 | ND | 79 | ug/Kg | 03/03/15 | AW | SW8082A |
| PCB-1242 | ND | 79 | ug/Kg | 03/03/15 | AW | SW8082A |
| PCB-1248 | ND | 79 | ug/Kg | 03/03/15 | AW | SW8082A |
| PCB-1254 | ND | 79 | ug/Kg | 03/03/15 | AW | SW8082A |
| PCB-1260 | ND | 79 | ug/Kg | 03/03/15 | AW | SW8082A |
| PCB-1262 | ND | 79 | ug/Kg | 03/03/15 | AW | SW8082A |
| PCB-1268 | ND | 79 | ug/Kg | 03/03/15 | AW | SW8082A |
| **QA/QC Surrogates** | | | | | | |
| % DCBP | 88 | | % | 03/03/15 | AW | 30 - 150 % |
| % TCMX | 76 | | % | 03/03/15 | AW | 30 - 150 % |
| **Volatiles (TCL)** | | | | | | |
| 1,1,1-Trichloroethane | ND | 4.1 | ug/kg | 03/04/15 | JLI | SW8260C |
| 1,1,2,2-Tetrachloroethane | ND | 4.1 | ug/kg | 03/04/15 | JLI | SW8260C |
| 1,1,2-Trichloroethane | ND | 4.1 | ug/kg | 03/04/15 | JLI | SW8260C |
| 1,1-Dichloroethane | ND | 4.1 | ug/kg | 03/04/15 | JLI | SW8260C |
| 1,1-Dichloroethene | ND | 4.1 | ug/kg | 03/04/15 | JLI | SW8260C |
| 1,2,3-Trichlorobenzene | ND | 4.1 | ug/kg | 03/04/15 | JLI | SW8260C |
| 1,2,4-Trichlorobenzene | ND | 4.1 | ug/kg | 03/04/15 | JLI | SW8260C |
| 1,2-Dibromo-3-chloropropane | ND | 4.1 | ug/kg | 03/04/15 | JLI | SW8260C |
| 1,2-Dibromoethane | ND | 4.1 | ug/kg | 03/04/15 | JLI | SW8260C |
| 1,2-Dichlorobenzene | ND | 4.1 | ug/kg | 03/04/15 | JLI | SW8260C |
| 1,2-Dichloroethane | ND | 4.1 | ug/kg | 03/04/15 | JLI | SW8260C |
| 1,2-Dichloropropane | ND | 4.1 | ug/kg | 03/04/15 | JLI | SW8260C |
| 1,3-Dichlorobenzene | ND | 4.1 | ug/kg | 03/04/15 | JLI | SW8260C |
| 1,4-Dichlorobenzene | ND | 4.1 | ug/kg | 03/04/15 | JLI | SW8260C |
| 2-Hexanone | ND | 20 | ug/kg | 03/04/15 | JLI | SW8260C |
| 4-Methyl-2-pentanone | ND | 20 | ug/kg | 03/04/15 | JLI | SW8260C |
| Acetone | 72 | 41 | ug/kg | 03/04/15 | JLI | SW8260C |
| Benzene | ND | 4.1 | ug/kg | 03/04/15 | JLI | SW8260C |
| Bromochloromethane | ND | 4.1 | ug/kg | 03/04/15 | JLI | SW8260C |
| Bromodichloromethane | ND | 4.1 | ug/kg | 03/04/15 | JLI | SW8260C |
| Bromoform | ND | 4.1 | ug/kg | 03/04/15 | JLI | SW8260C |
| Bromomethane | ND | 4.1 | ug/kg | 03/04/15 | JLI | SW8260C |
| Carbon Disulfide | ND | 4.1 | ug/kg | 03/04/15 | JLI | SW8260C |
| Carbon tetrachloride | ND | 4.1 | ug/kg | 03/04/15 | JLI | SW8260C |
| Chlorobenzene | ND | 4.1 | ug/kg | 03/04/15 | JLI | SW8260C |
| Chloroethane | ND | 4.1 | ug/kg | 03/04/15 | JLI | SW8260C |
| Chloroform | ND | 4.1 | ug/kg | 03/04/15 | JLI | SW8260C |
| Chloromethane | ND | 4.1 | ug/kg | 03/04/15 | JLI | SW8260C |
| cis-1,2-Dichloroethene | ND | 4.1 | ug/kg | 03/04/15 | JLI | SW8260C |
| cis-1,3-Dichloropropene | ND | 4.1 | ug/kg | 03/04/15 | JLI | SW8260C |
| Cyclohexane | ND | 4.1 | ug/kg | 03/04/15 | JLI | SW8260C |
| Dibromochloromethane | ND | 4.1 | ug/kg | 03/04/15 | JLI | SW8260C |
| Dichlorodifluoromethane | ND | 4.1 | ug/kg | 03/04/15 | JLI | SW8260C |

Project ID: 109 MARBLEDALE RD TUCKAHOE NY
Client ID: TB-12 4-6

Phoenix I.D.: BH78384

| Parameter | Result | RL/ PQL | Units | Date/Time | By | Reference | |
|---|---|---|---|---|---|---|---|
| Ethylbenzene | ND | 4.1 | ug/kg | 03/04/15 | JLI | SW8260C | |
| Isopropylbenzene | ND | 4.1 | ug/kg | 03/04/15 | JLI | SW8260C | |
| m&p-Xylene | 11 | 4.1 | ug/kg | 03/04/15 | JLI | SW8260C | |
| Methyl ethyl ketone | ND | 25 | ug/kg | 03/04/15 | JLI | SW8260C | |
| Methyl t-butyl ether (MTBE) | ND | 8.2 | ug/kg | 03/04/15 | JLI | SW8260C | |
| Methylacetate | ND | 3.3 | ug/kg | 03/04/15 | JLI | SW8260C | |
| Methylcyclohexane | ND | 4.1 | ug/kg | 03/04/15 | JLI | SW8260C | |
| Methylene chloride | ND | 4.1 | ug/kg | 03/04/15 | JLI | SW8260C | |
| o-Xylene | 8.7 | 4.1 | ug/kg | 03/04/15 | JLI | SW8260C | |
| Styrene | ND | 4.1 | ug/kg | 03/04/15 | JLI | SW8260C | |
| Tetrachloroethene | ND | 4.1 | ug/kg | 03/04/15 | JLI | SW8260C | |
| Toluene | ND | 4.1 | ug/kg | 03/04/15 | JLI | SW8260C | |
| Total Xylenes | 19.7 | 4.1 | ug/kg | 03/04/15 | JLI | SW8260C | |
| trans-1,2-Dichloroethene | ND | 4.1 | ug/kg | 03/04/15 | JLI | SW8260C | |
| trans-1,3-Dichloropropene | ND | 4.1 | ug/kg | 03/04/15 | JLI | SW8260C | |
| Trichloroethene | ND | 4.1 | ug/kg | 03/04/15 | JLI | SW8260C | |
| Trichlorofluoromethane | ND | 4.1 | ug/kg | 03/04/15 | JLI | SW8260C | |
| Trichlorotrifluoroethane | ND | 4.1 | ug/kg | 03/04/15 | JLI | SW8260C | |
| Vinyl chloride | ND | 4.1 | ug/kg | 03/04/15 | JLI | SW8260C | |
| **QA/QC Surrogates** | | | | | | | |
| % 1,2-dichlorobenzene-d4 | 100 | | % | 03/04/15 | JLI | 70 - 130 % | |
| % Bromofluorobenzene | 92 | | % | 03/04/15 | JLI | 70 - 130 % | |
| % Dibromofluoromethane | 77 | | % | 03/04/15 | JLI | 70 - 130 % | |
| % Toluene-d8 | 95 | | % | 03/04/15 | JLI | 70 - 130 % | |
| **1,4-dioxane** | | | | | | | |
| 1,4-dioxane | ND | 82 | ug/kg | 03/04/15 | JLI | SW8260C | |
| **Semivolatiles** | | | | | | | |
| 1,1-Biphenyl | ND | 560 | ug/Kg | 03/03/15 | DD | SW8270D | |
| 1,2,4,5-Tetrachlorobenzene | ND | 560 | ug/Kg | 03/03/15 | DD | SW8270D | |
| 2,3,4,6-tetrachlorophenol | ND | 560 | ug/Kg | 03/03/15 | DD | SW8270D | |
| 2,4,5-Trichlorophenol | ND | 560 | ug/Kg | 03/03/15 | DD | SW8270D | |
| 2,4,6-Trichlorophenol | ND | 560 | ug/Kg | 03/03/15 | DD | SW8270D | |
| 2,4-Dichlorophenol | ND | 560 | ug/Kg | 03/03/15 | DD | SW8270D | |
| 2,4-Dimethylphenol | ND | 560 | ug/Kg | 03/03/15 | DD | SW8270D | |
| 2,4-Dinitrophenol | ND | 1300 | ug/Kg | 03/03/15 | DD | SW8270D | |
| 2,4-Dinitrotoluene | ND | 560 | ug/Kg | 03/03/15 | DD | SW8270D | |
| 2,6-Dinitrotoluene | ND | 560 | ug/Kg | 03/03/15 | DD | SW8270D | |
| 2-Chloronaphthalene | ND | 560 | ug/Kg | 03/03/15 | DD | SW8270D | |
| 2-Chlorophenol | ND | 560 | ug/Kg | 03/03/15 | DD | SW8270D | |
| 2-Methylnaphthalene | 1300 | 560 | ug/Kg | 03/03/15 | DD | SW8270D | |
| 2-Methylphenol (o-cresol) | ND | 330 | ug/Kg | 03/03/15 | DD | SW8270D | |
| 2-Nitroaniline | ND | 1300 | ug/Kg | 03/03/15 | DD | SW8270D | |
| 2-Nitrophenol | ND | 560 | ug/Kg | 03/03/15 | DD | SW8270D | |
| 3&4-Methylphenol (m&p-cresol) | ND | 800 | ug/Kg | 03/03/15 | DD | SW8270D | 1 |
| 3,3'-Dichlorobenzidine | ND | 960 | ug/Kg | 03/03/15 | DD | SW8270D | |
| 3-Nitroaniline | ND | 1300 | ug/Kg | 03/03/15 | DD | SW8270D | |
| 4,6-Dinitro-2-methylphenol | ND | 2300 | ug/Kg | 03/03/15 | DD | SW8270D | |
| 4-Bromophenyl phenyl ether | ND | 800 | ug/Kg | 03/03/15 | DD | SW8270D | |

Project ID: 109 MARBLEDALE RD TUCKAHOE NY
Client ID: TB-12 4-6

Phoenix I.D.: BH78384

| Parameter | Result | RL/ PQL | Units | Date/Time | By | Reference | |
|---|---|---|---|---|---|---|---|
| 4-Chloro-3-methylphenol | ND | 560 | ug/Kg | 03/03/15 | DD | SW8270D | |
| 4-Chloroaniline | ND | 560 | ug/Kg | 03/03/15 | DD | SW8270D | |
| 4-Chlorophenyl phenyl ether | ND | 560 | ug/Kg | 03/03/15 | DD | SW8270D | |
| 4-Nitroaniline | ND | 1300 | ug/Kg | 03/03/15 | DD | SW8270D | |
| 4-Nitrophenol | ND | 2300 | ug/Kg | 03/03/15 | DD | SW8270D | |
| Acenaphthene | ND | 560 | ug/Kg | 03/03/15 | DD | SW8270D | |
| Acenaphthylene | ND | 560 | ug/Kg | 03/03/15 | DD | SW8270D | |
| Acetophenone | ND | 560 | ug/Kg | 03/03/15 | DD | SW8270D | |
| Anthracene | 640 | 560 | ug/Kg | 03/03/15 | DD | SW8270D | |
| Atrazine | ND | 560 | ug/Kg | 03/03/15 | DD | SW8270D | |
| Benz(a)anthracene | 1400 | 560 | ug/Kg | 03/03/15 | DD | SW8270D | |
| Benzaldehyde | ND | 560 | ug/Kg | 03/03/15 | DD | SW8270D | |
| Benzo(a)pyrene | 2100 | 560 | ug/Kg | 03/03/15 | DD | SW8270D | |
| Benzo(b)fluoranthene | 2300 | 560 | ug/Kg | 03/03/15 | DD | SW8270D | |
| Benzo(ghi)perylene | 1300 | 560 | ug/Kg | 03/03/15 | DD | SW8270D | |
| Benzo(k)fluoranthene | 840 | 560 | ug/Kg | 03/03/15 | DD | SW8270D | |
| Benzyl butyl phthalate | ND | 560 | ug/Kg | 03/03/15 | DD | SW8270D | |
| Bis(2-chloroethoxy)methane | ND | 560 | ug/Kg | 03/03/15 | DD | SW8270D | |
| Bis(2-chloroethyl)ether | ND | 800 | ug/Kg | 03/03/15 | DD | SW8270D | |
| Bis(2-chloroisopropyl)ether | ND | 560 | ug/Kg | 03/03/15 | DD | SW8270D | 1 |
| Bis(2-ethylhexyl)phthalate | 560 | 560 | ug/Kg | 03/03/15 | DD | SW8270D | |
| Caprolactam | ND | 560 | ug/Kg | 03/03/15 | DD | SW8270D | |
| Carbazole | ND | 2300 | ug/Kg | 03/03/15 | DD | SW8270D | |
| Chrysene | 1500 | 560 | ug/Kg | 03/03/15 | DD | SW8270D | |
| Dibenz(a,h)anthracene | ND | 330 | ug/Kg | 03/03/15 | DD | SW8270D | |
| Dibenzofuran | ND | 560 | ug/Kg | 03/03/15 | DD | SW8270D | |
| Diethyl phthalate | ND | 560 | ug/Kg | 03/03/15 | DD | SW8270D | |
| Dimethylphthalate | ND | 560 | ug/Kg | 03/03/15 | DD | SW8270D | |
| Di-n-butylphthalate | ND | 560 | ug/Kg | 03/03/15 | DD | SW8270D | |
| Di-n-octylphthalate | ND | 560 | ug/Kg | 03/03/15 | DD | SW8270D | |
| Fluoranthene | 2500 | 560 | ug/Kg | 03/03/15 | DD | SW8270D | |
| Fluorene | ND | 560 | ug/Kg | 03/03/15 | DD | SW8270D | |
| Hexachlorobenzene | ND | 560 | ug/Kg | 03/03/15 | DD | SW8270D | |
| Hexachlorobutadiene | ND | 560 | ug/Kg | 03/03/15 | DD | SW8270D | |
| Hexachlorocyclopentadiene | ND | 560 | ug/Kg | 03/03/15 | DD | SW8270D | |
| Hexachloroethane | ND | 560 | ug/Kg | 03/03/15 | DD | SW8270D | |
| Indeno(1,2,3-cd)pyrene | 1200 | 560 | ug/Kg | 03/03/15 | DD | SW8270D | |
| Isophorone | ND | 560 | ug/Kg | 03/03/15 | DD | SW8270D | |
| Naphthalene | ND | 560 | ug/Kg | 03/03/15 | DD | SW8270D | |
| Nitrobenzene | ND | 560 | ug/Kg | 03/03/15 | DD | SW8270D | |
| N-Nitrosodimethylamine | ND | 800 | ug/Kg | 03/03/15 | DD | SW8270D | |
| N-Nitrosodi-n-propylamine | ND | 560 | ug/Kg | 03/03/15 | DD | SW8270D | |
| N-Nitrosodiphenylamine | ND | 800 | ug/Kg | 03/03/15 | DD | SW8270D | |
| Pentachlorophenol | ND | 800 | ug/Kg | 03/03/15 | DD | SW8270D | |
| Phenanthrene | 1900 | 560 | ug/Kg | 03/03/15 | DD | SW8270D | |
| Phenol | ND | 330 | ug/Kg | 03/03/15 | DD | SW8270D | |
| Pyrene | 3500 | 560 | ug/Kg | 03/03/15 | DD | SW8270D | |
| **QA/QC Surrogates** | | | | | | | |
| % 2,4,6-Tribromophenol | 54 | | % | 03/03/15 | DD | 30 - 130 % | |

Project ID: 109 MARBLEDALE RD TUCKAHOE NY
Client ID: TB-12 4-6

Phoenix I.D.: BH78384

| Parameter | Result | RL/ PQL | Units | Date/Time | By | Reference |
|---|---|---|---|---|---|---|
| % 2-Fluorobiphenyl | 68 | | % | 03/03/15 | DD | 30 - 130 % |
| % 2-Fluorophenol | 60 | | % | 03/03/15 | DD | 30 - 130 % |
| % Nitrobenzene-d5 | 64 | | % | 03/03/15 | DD | 30 - 130 % |
| % Phenol-d5 | 62 | | % | 03/03/15 | DD | 30 - 130 % |
| % Terphenyl-d14 | 94 | | % | 03/03/15 | DD | 30 - 130 % |
| SVOA Library Search Top 15 | Completed | | | 03/04/15 | DD | |

1 = This parameter is not certified by NY NELAC for this matrix. NY NELAC does not offer certification for all parameters at this time.

**RL/PQL=Reporting/Practical Quantitation Level (Equivalent to NELAC LOQ, Limit of Quanitation) ND=Not Detected BRL=Below Reporting Level**

## Comments:

Please be advised that the NY 375 soil criteria for chromium are based on hexavalent chromium and trivalent chromium.

All soils, solids and sludges are reported on a dry weight basis unless otherwise noted in the sample comments.

If there are any questions regarding this data, please call Phoenix Client Services at extension 200.
This report must not be reproduced except in full as defined by the attached chain of custody.

**Phyllis Shiller, Laboratory Director**
**March 09, 2015**
**Reviewed and Released by: Phyllis Shiller, Laboratory Director**

PHOENIX

Environmental Laboratories, Inc.
587 East Middle Turnpike, P.O.Box 370, Manchester, CT 06045
Tel. (860) 645-1102 Fax (860) 645-0823

ACCREDITED IN ACCORDANCE WITH nelac NY # 11301

# Analysis Report

March 09, 2015

FOR: Attn: Mr. Tim Carr
HydroEnvironmental Solutions, Inc.
One Deans Bridge Rd
Somers NY 10589

| Sample Information | | Custody Information | | Date | Time |
|---|---|---|---|---|---|
| Matrix: | SOLID | Collected by: | RG | 02/26/15 | 0:00 |
| Location Code: | HESNY-TUCK | Received by: | SW | 03/02/15 | 15:48 |
| Rush Request: | 72 Hour | Analyzed by: | see "By" below | | |
| P.O.#: | | | | | |

## Laboratory Data

SDG ID: GBH78384
Phoenix ID: BH78385

Project ID: 109 MARBLEDALE RD TUCKAHOE NY
Client ID: TB-12 28-30

| Parameter | Result | RL/ PQL | Units | Date/Time | By | Reference |
|---|---|---|---|---|---|---|
| Silver | < 0.37 | 0.37 | mg/Kg | 03/03/15 | LK | SW6010C |
| Aluminum | 24900 | 550 | mg/Kg | 03/04/15 | LK | SW6010C |
| Arsenic | 1.5 | 0.7 | mg/Kg | 03/03/15 | LK | SW6010C |
| Barium | 157 | 0.37 | mg/Kg | 03/03/15 | LK | SW6010C |
| Beryllium | 0.54 | 0.29 | mg/Kg | 03/03/15 | LK | SW6010C |
| Calcium | 10500 | 5.5 | mg/Kg | 03/03/15 | LK | SW6010C |
| Cadmium | < 0.37 | 0.37 | mg/Kg | 03/03/15 | LK | SW6010C |
| Cobalt | 15.0 | 0.37 | mg/Kg | 03/03/15 | LK | SW6010C |
| Chromium | 37.8 | 0.37 | mg/Kg | 03/03/15 | LK | SW6010C |
| Copper | 107 | 0.37 | mg/kg | 03/03/15 | LK | SW6010C |
| Iron | 28800 | 55 | mg/Kg | 03/03/15 | EK | SW6010C |
| Mercury | 0.10 | 0.03 | mg/Kg | 03/03/15 | MA | SW7471B |
| Potassium | 5300 | 55 | mg/Kg | 03/03/15 | EK | SW6010C |
| Magnesium | 11100 | 55 | mg/Kg | 03/03/15 | EK | SW6010C |
| Manganese | 380 | 3.7 | mg/Kg | 03/03/15 | EK | SW6010C |
| Sodium | 312 | 5.5 | mg/Kg | 03/03/15 | LK | SW6010C |
| Nickel | 28.9 | 0.37 | mg/Kg | 03/03/15 | LK | SW6010C |
| Lead | 95.8 | 0.37 | mg/Kg | 03/03/15 | LK | SW6010C |
| Antimony | < 3.7 | 3.7 | mg/Kg | 03/03/15 | LK | SW6010C |
| Selenium | < 1.5 | 1.5 | mg/Kg | 03/03/15 | LK | SW6010C |
| Thallium | < 3.3 | 3.3 | mg/Kg | 03/03/15 | LK | SW6010C |
| Vanadium | 47.9 | 0.37 | mg/Kg | 03/03/15 | LK | SW6010C |
| Zinc | 168 | 3.7 | mg/Kg | 03/03/15 | EK | SW6010C |
| Percent Solid | 84 | | % | 03/02/15 | i | SW846-%Solid |
| Total Cyanide | < 0.54 | 0.54 | mg/Kg | 03/02/15 | O/EG | SW9010C/SW90 |
| Soil Extraction for PCB | Completed | | | 03/02/15 | CC/H | SW3545A |
| Soil Extraction for SVOA | Completed | | | 03/02/15 | CJ/VH | SW3545A |
| Mercury Digestion | Completed | | | 03/03/15 | I/I | SW7471B |

Project ID: 109 MARBLEDALE RD TUCKAHOE NY
Client ID: TB-12 28-30

Phoenix I.D.: BH78385

| Parameter | Result | RL/ PQL | Units | Date/Time | By | Reference |
|---|---|---|---|---|---|---|
| Total Metals Digest | Completed | | | 03/02/15 | CB/AG | SW3050B |
| **Polychlorinated Biphenyls** | | | | | | |
| PCB-1016 | ND | 78 | ug/Kg | 03/03/15 | AW | SW8082A |
| PCB-1221 | ND | 78 | ug/Kg | 03/03/15 | AW | SW8082A |
| PCB-1232 | ND | 78 | ug/Kg | 03/03/15 | AW | SW8082A |
| PCB-1242 | ND | 78 | ug/Kg | 03/03/15 | AW | SW8082A |
| PCB-1248 | ND | 78 | ug/Kg | 03/03/15 | AW | SW8082A |
| PCB-1254 | ND | 78 | ug/Kg | 03/03/15 | AW | SW8082A |
| PCB-1260 | ND | 78 | ug/Kg | 03/03/15 | AW | SW8082A |
| PCB-1262 | ND | 78 | ug/Kg | 03/03/15 | AW | SW8082A |
| PCB-1268 | ND | 78 | ug/Kg | 03/03/15 | AW | SW8082A |
| **QA/QC Surrogates** | | | | | | |
| % DCBP | 81 | | % | 03/03/15 | AW | 30 - 150 % |
| % TCMX | 77 | | % | 03/03/15 | AW | 30 - 150 % |
| **Volatiles (TCL)** | | | | | | |
| 1,1,1-Trichloroethane | ND | 5.1 | ug/kg | 03/03/15 | JLI | SW8260C |
| 1,1,2,2-Tetrachloroethane | ND | 5.1 | ug/kg | 03/03/15 | JLI | SW8260C |
| 1,1,2-Trichloroethane | ND | 5.1 | ug/kg | 03/03/15 | JLI | SW8260C |
| 1,1-Dichloroethane | ND | 5.1 | ug/kg | 03/03/15 | JLI | SW8260C |
| 1,1-Dichloroethene | ND | 5.1 | ug/kg | 03/03/15 | JLI | SW8260C |
| 1,2,3-Trichlorobenzene | ND | 5.1 | ug/kg | 03/03/15 | JLI | SW8260C |
| 1,2,4-Trichlorobenzene | ND | 5.1 | ug/kg | 03/03/15 | JLI | SW8260C |
| 1,2-Dibromo-3-chloropropane | ND | 5.1 | ug/kg | 03/03/15 | JLI | SW8260C |
| 1,2-Dibromoethane | ND | 5.1 | ug/kg | 03/03/15 | JLI | SW8260C |
| 1,2-Dichlorobenzene | ND | 5.1 | ug/kg | 03/03/15 | JLI | SW8260C |
| 1,2-Dichloroethane | ND | 5.1 | ug/kg | 03/03/15 | JLI | SW8260C |
| 1,2-Dichloropropane | ND | 5.1 | ug/kg | 03/03/15 | JLI | SW8260C |
| 1,3-Dichlorobenzene | ND | 5.1 | ug/kg | 03/03/15 | JLI | SW8260C |
| 1,4-Dichlorobenzene | ND | 5.1 | ug/kg | 03/03/15 | JLI | SW8260C |
| 2-Hexanone | ND | 25 | ug/kg | 03/03/15 | JLI | SW8260C |
| 4-Methyl-2-pentanone | ND | 25 | ug/kg | 03/03/15 | JLI | SW8260C |
| Acetone | 62 | 51 | ug/kg | 03/03/15 | JLI | SW8260C |
| Benzene | ND | 5.1 | ug/kg | 03/03/15 | JLI | SW8260C |
| Bromochloromethane | ND | 5.1 | ug/kg | 03/03/15 | JLI | SW8260C |
| Bromodichloromethane | ND | 5.1 | ug/kg | 03/03/15 | JLI | SW8260C |
| Bromoform | ND | 5.1 | ug/kg | 03/03/15 | JLI | SW8260C |
| Bromomethane | ND | 5.1 | ug/kg | 03/03/15 | JLI | SW8260C |
| Carbon Disulfide | ND | 5.1 | ug/kg | 03/03/15 | JLI | SW8260C |
| Carbon tetrachloride | ND | 5.1 | ug/kg | 03/03/15 | JLI | SW8260C |
| Chlorobenzene | ND | 5.1 | ug/kg | 03/03/15 | JLI | SW8260C |
| Chloroethane | ND | 5.1 | ug/kg | 03/03/15 | JLI | SW8260C |
| Chloroform | ND | 5.1 | ug/kg | 03/03/15 | JLI | SW8260C |
| Chloromethane | ND | 5.1 | ug/kg | 03/03/15 | JLI | SW8260C |
| cis-1,2-Dichloroethene | ND | 5.1 | ug/kg | 03/03/15 | JLI | SW8260C |
| cis-1,3-Dichloropropene | ND | 5.1 | ug/kg | 03/03/15 | JLI | SW8260C |
| Cyclohexane | ND | 5.1 | ug/kg | 03/03/15 | JLI | SW8260C |
| Dibromochloromethane | ND | 5.1 | ug/kg | 03/03/15 | JLI | SW8260C |
| Dichlorodifluoromethane | ND | 5.1 | ug/kg | 03/03/15 | JLI | SW8260C |

Project ID: 109 MARBLEDALE RD TUCKAHOE NY
Client ID: TB-12 28-30

Phoenix I.D.: BH78385

| Parameter | Result | RL/ PQL | Units | Date/Time | By | Reference |
|---|---|---|---|---|---|---|
| Ethylbenzene | ND | 5.1 | ug/kg | 03/03/15 | JLI | SW8260C |
| Isopropylbenzene | ND | 5.1 | ug/kg | 03/03/15 | JLI | SW8260C |
| m&p-Xylene | ND | 5.1 | ug/kg | 03/03/15 | JLI | SW8260C |
| Methyl ethyl ketone | ND | 30 | ug/kg | 03/03/15 | JLI | SW8260C |
| Methyl t-butyl ether (MTBE) | ND | 10 | ug/kg | 03/03/15 | JLI | SW8260C |
| Methylacetate | ND | 4.0 | ug/kg | 03/03/15 | JLI | SW8260C |
| Methylcyclohexane | ND | 5.1 | ug/kg | 03/03/15 | JLI | SW8260C |
| Methylene chloride | ND | 5.1 | ug/kg | 03/03/15 | JLI | SW8260C |
| o-Xylene | ND | 5.1 | ug/kg | 03/03/15 | JLI | SW8260C |
| Styrene | ND | 5.1 | ug/kg | 03/03/15 | JLI | SW8260C |
| Tetrachloroethene | ND | 5.1 | ug/kg | 03/03/15 | JLI | SW8260C |
| Toluene | ND | 5.1 | ug/kg | 03/03/15 | JLI | SW8260C |
| Total Xylenes | ND | 5.1 | ug/kg | 03/03/15 | JLI | SW8260C |
| trans-1,2-Dichloroethene | ND | 5.1 | ug/kg | 03/03/15 | JLI | SW8260C |
| trans-1,3-Dichloropropene | ND | 5.1 | ug/kg | 03/03/15 | JLI | SW8260C |
| Trichloroethene | ND | 5.1 | ug/kg | 03/03/15 | JLI | SW8260C |
| Trichlorofluoromethane | ND | 5.1 | ug/kg | 03/03/15 | JLI | SW8260C |
| Trichlorotrifluoroethane | ND | 5.1 | ug/kg | 03/03/15 | JLI | SW8260C |
| Vinyl chloride | ND | 5.1 | ug/kg | 03/03/15 | JLI | SW8260C |
| **QA/QC Surrogates** | | | | | | |
| % 1,2-dichlorobenzene-d4 | 100 | | % | 03/03/15 | JLI | 70 - 130 % |
| % Bromofluorobenzene | 100 | | % | 03/03/15 | JLI | 70 - 130 % |
| % Dibromofluoromethane | 96 | | % | 03/03/15 | JLI | 70 - 130 % |
| % Toluene-d8 | 97 | | % | 03/03/15 | JLI | 70 - 130 % |
| **1,4-dioxane** | | | | | | |
| 1,4-dioxane | ND | 100 | ug/kg | 03/03/15 | JLI | SW8260C |
| **Semivolatiles** | | | | | | |
| 1,1-Biphenyl | ND | 270 | ug/Kg | 03/02/15 | DD | SW8270D |
| 1,2,4,5-Tetrachlorobenzene | ND | 270 | ug/Kg | 03/02/15 | DD | SW8270D |
| 2,3,4,6-tetrachlorophenol | ND | 270 | ug/Kg | 03/02/15 | DD | SW8270D |
| 2,4,5-Trichlorophenol | ND | 270 | ug/Kg | 03/02/15 | DD | SW8270D |
| 2,4,6-Trichlorophenol | ND | 270 | ug/Kg | 03/02/15 | DD | SW8270D |
| 2,4-Dichlorophenol | ND | 270 | ug/Kg | 03/02/15 | DD | SW8270D |
| 2,4-Dimethylphenol | ND | 270 | ug/Kg | 03/02/15 | DD | SW8270D |
| 2,4-Dinitrophenol | ND | 620 | ug/Kg | 03/02/15 | DD | SW8270D |
| 2,4-Dinitrotoluene | ND | 270 | ug/Kg | 03/02/15 | DD | SW8270D |
| 2,6-Dinitrotoluene | ND | 270 | ug/Kg | 03/02/15 | DD | SW8270D |
| 2-Chloronaphthalene | ND | 270 | ug/Kg | 03/02/15 | DD | SW8270D |
| 2-Chlorophenol | ND | 270 | ug/Kg | 03/02/15 | DD | SW8270D |
| 2-Methylnaphthalene | ND | 270 | ug/Kg | 03/02/15 | DD | SW8270D |
| 2-Methylphenol (o-cresol) | ND | 270 | ug/Kg | 03/02/15 | DD | SW8270D |
| 2-Nitroaniline | ND | 620 | ug/Kg | 03/02/15 | DD | SW8270D |
| 2-Nitrophenol | ND | 270 | ug/Kg | 03/02/15 | DD | SW8270D |
| 3&4-Methylphenol (m&p-cresol) | ND | 390 | ug/Kg | 03/02/15 | DD | SW8270D 1 |
| 3,3'-Dichlorobenzidine | ND | 460 | ug/Kg | 03/02/15 | DD | SW8270D |
| 3-Nitroaniline | ND | 620 | ug/Kg | 03/02/15 | DD | SW8270D |
| 4,6-Dinitro-2-methylphenol | ND | 1100 | ug/Kg | 03/02/15 | DD | SW8270D |
| 4-Bromophenyl phenyl ether | ND | 390 | ug/Kg | 03/02/15 | DD | SW8270D |

Project ID: 109 MARBLEDALE RD TUCKAHOE NY
Client ID: TB-12 28-30

Phoenix I.D.: BH78385

| Parameter | Result | RL/ PQL | Units | Date/Time | By | Reference | |
|---|---|---|---|---|---|---|---|
| 4-Chloro-3-methylphenol | ND | 270 | ug/Kg | 03/02/15 | DD | SW8270D | |
| 4-Chloroaniline | ND | 270 | ug/Kg | 03/02/15 | DD | SW8270D | |
| 4-Chlorophenyl phenyl ether | ND | 270 | ug/Kg | 03/02/15 | DD | SW8270D | |
| 4-Nitroaniline | ND | 620 | ug/Kg | 03/02/15 | DD | SW8270D | |
| 4-Nitrophenol | ND | 1100 | ug/Kg | 03/02/15 | DD | SW8270D | |
| Acenaphthene | ND | 270 | ug/Kg | 03/02/15 | DD | SW8270D | |
| Acenaphthylene | ND | 270 | ug/Kg | 03/02/15 | DD | SW8270D | |
| Acetophenone | ND | 270 | ug/Kg | 03/02/15 | DD | SW8270D | |
| Anthracene | 570 | 270 | ug/Kg | 03/02/15 | DD | SW8270D | |
| Atrazine | ND | 270 | ug/Kg | 03/02/15 | DD | SW8270D | |
| Benz(a)anthracene | 860 | 270 | ug/Kg | 03/02/15 | DD | SW8270D | |
| Benzaldehyde | ND | 270 | ug/Kg | 03/02/15 | DD | SW8270D | |
| Benzo(a)pyrene | 750 | 270 | ug/Kg | 03/02/15 | DD | SW8270D | |
| Benzo(b)fluoranthene | 980 | 270 | ug/Kg | 03/02/15 | DD | SW8270D | |
| Benzo(ghi)perylene | 490 | 270 | ug/Kg | 03/02/15 | DD | SW8270D | |
| Benzo(k)fluoranthene | 420 | 270 | ug/Kg | 03/02/15 | DD | SW8270D | |
| Benzyl butyl phthalate | ND | 270 | ug/Kg | 03/02/15 | DD | SW8270D | |
| Bis(2-chloroethoxy)methane | ND | 270 | ug/Kg | 03/02/15 | DD | SW8270D | |
| Bis(2-chloroethyl)ether | ND | 390 | ug/Kg | 03/02/15 | DD | SW8270D | |
| Bis(2-chloroisopropyl)ether | ND | 270 | ug/Kg | 03/02/15 | DD | SW8270D | 1 |
| Bis(2-ethylhexyl)phthalate | 640 | 270 | ug/Kg | 03/02/15 | DD | SW8270D | |
| Caprolactam | ND | 270 | ug/Kg | 03/02/15 | DD | SW8270D | |
| Carbazole | ND | 1100 | ug/Kg | 03/02/15 | DD | SW8270D | |
| Chrysene | 940 | 270 | ug/Kg | 03/02/15 | DD | SW8270D | |
| Dibenz(a,h)anthracene | ND | 270 | ug/Kg | 03/02/15 | DD | SW8270D | |
| Dibenzofuran | 280 | 270 | ug/Kg | 03/02/15 | DD | SW8270D | |
| Diethyl phthalate | ND | 270 | ug/Kg | 03/02/15 | DD | SW8270D | |
| Dimethylphthalate | ND | 270 | ug/Kg | 03/02/15 | DD | SW8270D | |
| Di-n-butylphthalate | ND | 270 | ug/Kg | 03/02/15 | DD | SW8270D | |
| Di-n-octylphthalate | ND | 270 | ug/Kg | 03/02/15 | DD | SW8270D | |
| Fluoranthene | 2600 | 270 | ug/Kg | 03/02/15 | DD | SW8270D | |
| Fluorene | 400 | 270 | ug/Kg | 03/02/15 | DD | SW8270D | |
| Hexachlorobenzene | ND | 270 | ug/Kg | 03/02/15 | DD | SW8270D | |
| Hexachlorobutadiene | ND | 270 | ug/Kg | 03/02/15 | DD | SW8270D | |
| Hexachlorocyclopentadiene | ND | 270 | ug/Kg | 03/02/15 | DD | SW8270D | |
| Hexachloroethane | ND | 270 | ug/Kg | 03/02/15 | DD | SW8270D | |
| Indeno(1,2,3-cd)pyrene | 420 | 270 | ug/Kg | 03/02/15 | DD | SW8270D | |
| Isophorone | ND | 270 | ug/Kg | 03/02/15 | DD | SW8270D | |
| Naphthalene | ND | 270 | ug/Kg | 03/02/15 | DD | SW8270D | |
| Nitrobenzene | ND | 270 | ug/Kg | 03/02/15 | DD | SW8270D | |
| N-Nitrosodimethylamine | ND | 390 | ug/Kg | 03/02/15 | DD | SW8270D | |
| N-Nitrosodi-n-propylamine | ND | 270 | ug/Kg | 03/02/15 | DD | SW8270D | |
| N-Nitrosodiphenylamine | ND | 390 | ug/Kg | 03/02/15 | DD | SW8270D | |
| Pentachlorophenol | ND | 390 | ug/Kg | 03/02/15 | DD | SW8270D | |
| Phenanthrene | 2500 | 270 | ug/Kg | 03/02/15 | DD | SW8270D | |
| Phenol | ND | 270 | ug/Kg | 03/02/15 | DD | SW8270D | |
| Pyrene | 2200 | 270 | ug/Kg | 03/02/15 | DD | SW8270D | |
| **QA/QC Surrogates** | | | | | | | |
| % 2,4,6-Tribromophenol | 89 | | % | 03/02/15 | DD | 30 - 130 % | |

Project ID: 109 MARBLEDALE RD TUCKAHOE NY
Client ID: TB-12 28-30

Phoenix I.D.: BH78385

| Parameter | Result | RL/ PQL | Units | Date/Time | By | Reference |
|---|---|---|---|---|---|---|
| % 2-Fluorobiphenyl | 83 | | % | 03/02/15 | DD | 30 - 130 % |
| % 2-Fluorophenol | 74 | | % | 03/02/15 | DD | 30 - 130 % |
| % Nitrobenzene-d5 | 78 | | % | 03/02/15 | DD | 30 - 130 % |
| % Phenol-d5 | 77 | | % | 03/02/15 | DD | 30 - 130 % |
| % Terphenyl-d14 | 117 | | % | 03/02/15 | DD | 30 - 130 % |
| SVOA Library Search Top 15 | Completed | | | 03/03/15 | DD | |

1 = This parameter is not certified by NY NELAC for this matrix. NY NELAC does not offer certification for all parameters at this time.

**RL/PQL=Reporting/Practical Quantitation Level (Equivalent to NELAC LOQ, Limit of Quanitation) ND=Not Detected BRL=Below Reporting Level**

## Comments:

Please be advised that the NY 375 soil criteria for chromium are based on hexavalent chromium and trivalent chromium.

All soils, solids and sludges are reported on a dry weight basis unless otherwise noted in the sample comments.

If there are any questions regarding this data, please call Phoenix Client Services at extension 200.
This report must not be reproduced except in full as defined by the attached chain of custody.

**Phyllis Shiller, Laboratory Director**
**March 09, 2015**
**Reviewed and Released by: Phyllis Shiller, Laboratory Director**

PHOENIX

Environmental Laboratories, Inc.
587 East Middle Turnpike, P.O.Box 370, Manchester, CT 06045
Tel. (860) 645-1102 Fax (860) 645-0823

ACCREDITED IN ACCORDANCE WITH nelac NY # 11301

# Analysis Report

March 09, 2015

FOR: Attn: Mr. Tim Carr
HydroEnvironmental Solutions, Inc.
One Deans Bridge Rd
Somers NY 10589

| Sample Information | | Custody Information | | Date | Time |
|---|---|---|---|---|---|
| Matrix: | SOLID | Collected by: | RG | 02/27/15 | 0:00 |
| Location Code: | HESNY-TUCK | Received by: | SW | 03/02/15 | 15:48 |
| Rush Request: | 72 Hour | Analyzed by: | see "By" below | | |
| P.O.#: | | | | | |

## Laboratory Data

SDG ID: GBH78384
Phoenix ID: BH78386

Project ID: 109 MARBLEDALE RD TUCKAHOE NY
Client ID: TB-11 4-6

| Parameter | Result | RL/ PQL | Units | Date/Time | By | Reference |
|---|---|---|---|---|---|---|
| Silver | < 0.39 | 0.39 | mg/Kg | 03/03/15 | LK | SW6010C |
| Aluminum | 8040 | 58 | mg/Kg | 03/04/15 | LK | SW6010C |
| Arsenic | 2.8 | 0.8 | mg/Kg | 03/03/15 | LK | SW6010C |
| Barium | 57.6 | 0.39 | mg/Kg | 03/03/15 | LK | SW6010C |
| Beryllium | < 0.31 | 0.31 | mg/Kg | 03/03/15 | LK | SW6010C |
| Calcium | 37000 | 58 | mg/Kg | 03/04/15 | LK | SW6010C |
| Cadmium | < 0.39 | 0.39 | mg/Kg | 03/03/15 | LK | SW6010C |
| Cobalt | 8.80 | 0.39 | mg/Kg | 03/03/15 | LK | SW6010C |
| Chromium | 17.0 | 0.39 | mg/Kg | 03/03/15 | LK | SW6010C |
| Copper | 72.0 | 0.39 | mg/kg | 03/03/15 | LK | SW6010C |
| Iron | 18300 | 58 | mg/Kg | 03/04/15 | LK | SW6010C |
| Mercury | 0.03 | 0.03 | mg/Kg | 03/03/15 | MA | SW7471B |
| Potassium | 1940 | 5.8 | mg/Kg | 03/03/15 | LK | SW6010C |
| Magnesium | 15000 | 58 | mg/Kg | 03/04/15 | LK | SW6010C |
| Manganese | 201 | 3.9 | mg/Kg | 03/04/15 | LK | SW6010C |
| Sodium | 414 | 5.8 | mg/Kg | 03/03/15 | LK | SW6010C |
| Nickel | 13.8 | 0.39 | mg/Kg | 03/03/15 | LK | SW6010C |
| Lead | 28.0 | 0.39 | mg/Kg | 03/03/15 | LK | SW6010C |
| Antimony | < 3.9 | 3.9 | mg/Kg | 03/03/15 | LK | SW6010C |
| Selenium | < 1.6 | 1.6 | mg/Kg | 03/03/15 | LK | SW6010C |
| Thallium | < 3.5 | 3.5 | mg/Kg | 03/03/15 | LK | SW6010C |
| Vanadium | 40.4 | 0.39 | mg/Kg | 03/03/15 | LK | SW6010C |
| Zinc | 49.1 | 0.39 | mg/Kg | 03/03/15 | LK | SW6010C |
| Percent Solid | 88 | | % | 03/02/15 | i | SW846-%Solid |
| Total Cyanide | < 0.57 | 0.57 | mg/Kg | 03/02/15 | O/EG | SW9010C/SW90 |
| Soil Extraction for PCB | Completed | | | 03/02/15 | CC/H | SW3545A |
| Soil Extraction for SVOA | Completed | | | 03/02/15 | CJ/VH | SW3545A |
| Mercury Digestion | Completed | | | 03/03/15 | I/I | SW7471B |

Project ID: 109 MARBLEDALE RD TUCKAHOE NY
Client ID: TB-11 4-6

Phoenix I.D.: BH78386

| Parameter | Result | RL/ PQL | Units | Date/Time | By | Reference |
|---|---|---|---|---|---|---|
| Total Metals Digest | Completed | | | 03/02/15 | CB/AG | SW3050B |
| **Polychlorinated Biphenyls** | | | | | | |
| PCB-1016 | ND | 74 | ug/Kg | 03/03/15 | AW | SW8082A |
| PCB-1221 | ND | 74 | ug/Kg | 03/03/15 | AW | SW8082A |
| PCB-1232 | ND | 74 | ug/Kg | 03/03/15 | AW | SW8082A |
| PCB-1242 | ND | 74 | ug/Kg | 03/03/15 | AW | SW8082A |
| PCB-1248 | ND | 74 | ug/Kg | 03/03/15 | AW | SW8082A |
| PCB-1254 | ND | 74 | ug/Kg | 03/03/15 | AW | SW8082A |
| PCB-1260 | ND | 74 | ug/Kg | 03/03/15 | AW | SW8082A |
| PCB-1262 | ND | 74 | ug/Kg | 03/03/15 | AW | SW8082A |
| PCB-1268 | ND | 74 | ug/Kg | 03/03/15 | AW | SW8082A |
| **QA/QC Surrogates** | | | | | | |
| % DCBP | 86 | | % | 03/03/15 | AW | 30 - 150 % |
| % TCMX | 84 | | % | 03/03/15 | AW | 30 - 150 % |
| **Volatiles (TCL)** | | | | | | |
| 1,1,1-Trichloroethane | ND | 5.8 | ug/kg | 03/03/15 | JLI | SW8260C |
| 1,1,2,2-Tetrachloroethane | ND | 5.8 | ug/kg | 03/03/15 | JLI | SW8260C |
| 1,1,2-Trichloroethane | ND | 5.8 | ug/kg | 03/03/15 | JLI | SW8260C |
| 1,1-Dichloroethane | ND | 5.8 | ug/kg | 03/03/15 | JLI | SW8260C |
| 1,1-Dichloroethene | ND | 5.8 | ug/kg | 03/03/15 | JLI | SW8260C |
| 1,2,3-Trichlorobenzene | ND | 5.8 | ug/kg | 03/03/15 | JLI | SW8260C |
| 1,2,4-Trichlorobenzene | ND | 5.8 | ug/kg | 03/03/15 | JLI | SW8260C |
| 1,2-Dibromo-3-chloropropane | ND | 5.8 | ug/kg | 03/03/15 | JLI | SW8260C |
| 1,2-Dibromoethane | ND | 5.8 | ug/kg | 03/03/15 | JLI | SW8260C |
| 1,2-Dichlorobenzene | ND | 5.8 | ug/kg | 03/03/15 | JLI | SW8260C |
| 1,2-Dichloroethane | ND | 5.8 | ug/kg | 03/03/15 | JLI | SW8260C |
| 1,2-Dichloropropane | ND | 5.8 | ug/kg | 03/03/15 | JLI | SW8260C |
| 1,3-Dichlorobenzene | ND | 5.8 | ug/kg | 03/03/15 | JLI | SW8260C |
| 1,4-Dichlorobenzene | ND | 5.8 | ug/kg | 03/03/15 | JLI | SW8260C |
| 2-Hexanone | ND | 29 | ug/kg | 03/03/15 | JLI | SW8260C |
| 4-Methyl-2-pentanone | ND | 29 | ug/kg | 03/03/15 | JLI | SW8260C |
| Acetone | ND | 50 | ug/kg | 03/03/15 | JLI | SW8260C |
| Benzene | ND | 5.8 | ug/kg | 03/03/15 | JLI | SW8260C |
| Bromochloromethane | ND | 5.8 | ug/kg | 03/03/15 | JLI | SW8260C |
| Bromodichloromethane | ND | 5.8 | ug/kg | 03/03/15 | JLI | SW8260C |
| Bromoform | ND | 5.8 | ug/kg | 03/03/15 | JLI | SW8260C |
| Bromomethane | ND | 5.8 | ug/kg | 03/03/15 | JLI | SW8260C |
| Carbon Disulfide | ND | 5.8 | ug/kg | 03/03/15 | JLI | SW8260C |
| Carbon tetrachloride | ND | 5.8 | ug/kg | 03/03/15 | JLI | SW8260C |
| Chlorobenzene | ND | 5.8 | ug/kg | 03/03/15 | JLI | SW8260C |
| Chloroethane | ND | 5.8 | ug/kg | 03/03/15 | JLI | SW8260C |
| Chloroform | ND | 5.8 | ug/kg | 03/03/15 | JLI | SW8260C |
| Chloromethane | ND | 5.8 | ug/kg | 03/03/15 | JLI | SW8260C |
| cis-1,2-Dichloroethene | ND | 5.8 | ug/kg | 03/03/15 | JLI | SW8260C |
| cis-1,3-Dichloropropene | ND | 5.8 | ug/kg | 03/03/15 | JLI | SW8260C |
| Cyclohexane | ND | 5.8 | ug/kg | 03/03/15 | JLI | SW8260C |
| Dibromochloromethane | ND | 5.8 | ug/kg | 03/03/15 | JLI | SW8260C |
| Dichlorodifluoromethane | ND | 5.8 | ug/kg | 03/03/15 | JLI | SW8260C |

Project ID: 109 MARBLEDALE RD TUCKAHOE NY
Client ID: TB-11 4-6

Phoenix I.D.: BH78386

| Parameter | Result | RL/ PQL | Units | Date/Time | By | Reference | |
|---|---|---|---|---|---|---|---|
| Ethylbenzene | ND | 5.8 | ug/kg | 03/03/15 | JLI | SW8260C | |
| Isopropylbenzene | ND | 5.8 | ug/kg | 03/03/15 | JLI | SW8260C | |
| m&p-Xylene | ND | 5.8 | ug/kg | 03/03/15 | JLI | SW8260C | |
| Methyl ethyl ketone | ND | 35 | ug/kg | 03/03/15 | JLI | SW8260C | |
| Methyl t-butyl ether (MTBE) | ND | 12 | ug/kg | 03/03/15 | JLI | SW8260C | |
| Methylacetate | ND | 4.6 | ug/kg | 03/03/15 | JLI | SW8260C | |
| Methylcyclohexane | ND | 5.8 | ug/kg | 03/03/15 | JLI | SW8260C | |
| Methylene chloride | ND | 5.8 | ug/kg | 03/03/15 | JLI | SW8260C | |
| o-Xylene | ND | 5.8 | ug/kg | 03/03/15 | JLI | SW8260C | |
| Styrene | ND | 5.8 | ug/kg | 03/03/15 | JLI | SW8260C | |
| Tetrachloroethene | ND | 5.8 | ug/kg | 03/03/15 | JLI | SW8260C | |
| Toluene | ND | 5.8 | ug/kg | 03/03/15 | JLI | SW8260C | |
| Total Xylenes | ND | 5.8 | ug/kg | 03/03/15 | JLI | SW8260C | |
| trans-1,2-Dichloroethene | ND | 5.8 | ug/kg | 03/03/15 | JLI | SW8260C | |
| trans-1,3-Dichloropropene | ND | 5.8 | ug/kg | 03/03/15 | JLI | SW8260C | |
| Trichloroethene | ND | 5.8 | ug/kg | 03/03/15 | JLI | SW8260C | |
| Trichlorofluoromethane | ND | 5.8 | ug/kg | 03/03/15 | JLI | SW8260C | |
| Trichlorotrifluoroethane | ND | 5.8 | ug/kg | 03/03/15 | JLI | SW8260C | |
| Vinyl chloride | ND | 5.8 | ug/kg | 03/03/15 | JLI | SW8260C | |
| **QA/QC Surrogates** | | | | | | | |
| % 1,2-dichlorobenzene-d4 | 99 | | % | 03/03/15 | JLI | 70 - 130 % | |
| % Bromofluorobenzene | 99 | | % | 03/03/15 | JLI | 70 - 130 % | |
| % Dibromofluoromethane | 94 | | % | 03/03/15 | JLI | 70 - 130 % | |
| % Toluene-d8 | 96 | | % | 03/03/15 | JLI | 70 - 130 % | |
| **1,4-dioxane** | | | | | | | |
| 1,4-dioxane | ND | 100 | ug/kg | 03/03/15 | JLI | SW8260C | |
| **Semivolatiles** | | | | | | | |
| 1,1-Biphenyl | ND | 2600 | ug/Kg | 03/03/15 | DD | SW8270D | |
| 1,2,4,5-Tetrachlorobenzene | ND | 2600 | ug/Kg | 03/03/15 | DD | SW8270D | |
| 2,3,4,6-tetrachlorophenol | ND | 2600 | ug/Kg | 03/03/15 | DD | SW8270D | |
| 2,4,5-Trichlorophenol | ND | 2600 | ug/Kg | 03/03/15 | DD | SW8270D | |
| 2,4,6-Trichlorophenol | ND | 2600 | ug/Kg | 03/03/15 | DD | SW8270D | |
| 2,4-Dichlorophenol | ND | 2600 | ug/Kg | 03/03/15 | DD | SW8270D | |
| 2,4-Dimethylphenol | ND | 2600 | ug/Kg | 03/03/15 | DD | SW8270D | |
| 2,4-Dinitrophenol | ND | 6000 | ug/Kg | 03/03/15 | DD | SW8270D | |
| 2,4-Dinitrotoluene | ND | 2600 | ug/Kg | 03/03/15 | DD | SW8270D | |
| 2,6-Dinitrotoluene | ND | 2600 | ug/Kg | 03/03/15 | DD | SW8270D | |
| 2-Chloronaphthalene | ND | 2600 | ug/Kg | 03/03/15 | DD | SW8270D | |
| 2-Chlorophenol | ND | 2600 | ug/Kg | 03/03/15 | DD | SW8270D | |
| 2-Methylnaphthalene | ND | 2600 | ug/Kg | 03/03/15 | DD | SW8270D | |
| 2-Methylphenol (o-cresol) | ND | 2600 | ug/Kg | 03/03/15 | DD | SW8270D | |
| 2-Nitroaniline | ND | 6000 | ug/Kg | 03/03/15 | DD | SW8270D | |
| 2-Nitrophenol | ND | 2600 | ug/Kg | 03/03/15 | DD | SW8270D | |
| 3&4-Methylphenol (m&p-cresol) | ND | 3700 | ug/Kg | 03/03/15 | DD | SW8270D | 1 |
| 3,3'-Dichlorobenzidine | ND | 4500 | ug/Kg | 03/03/15 | DD | SW8270D | |
| 3-Nitroaniline | ND | 6000 | ug/Kg | 03/03/15 | DD | SW8270D | |
| 4,6-Dinitro-2-methylphenol | ND | 11000 | ug/Kg | 03/03/15 | DD | SW8270D | |
| 4-Bromophenyl phenyl ether | ND | 3700 | ug/Kg | 03/03/15 | DD | SW8270D | |

Project ID: 109 MARBLEDALE RD TUCKAHOE NY
Client ID: TB-11 4-6

Phoenix I.D.: BH78386

| Parameter | Result | RL/ PQL | Units | Date/Time | By | Reference | |
|---|---|---|---|---|---|---|---|
| 4-Chloro-3-methylphenol | ND | 2600 | ug/Kg | 03/03/15 | DD | SW8270D | |
| 4-Chloroaniline | ND | 2600 | ug/Kg | 03/03/15 | DD | SW8270D | |
| 4-Chlorophenyl phenyl ether | ND | 2600 | ug/Kg | 03/03/15 | DD | SW8270D | |
| 4-Nitroaniline | ND | 6000 | ug/Kg | 03/03/15 | DD | SW8270D | |
| 4-Nitrophenol | ND | 11000 | ug/Kg | 03/03/15 | DD | SW8270D | |
| Acenaphthene | ND | 2600 | ug/Kg | 03/03/15 | DD | SW8270D | |
| Acenaphthylene | ND | 2600 | ug/Kg | 03/03/15 | DD | SW8270D | |
| Acetophenone | ND | 2600 | ug/Kg | 03/03/15 | DD | SW8270D | |
| Anthracene | ND | 2600 | ug/Kg | 03/03/15 | DD | SW8270D | |
| Atrazine | ND | 2600 | ug/Kg | 03/03/15 | DD | SW8270D | |
| Benz(a)anthracene | 2800 | 2600 | ug/Kg | 03/03/15 | DD | SW8270D | |
| Benzaldehyde | ND | 2600 | ug/Kg | 03/03/15 | DD | SW8270D | |
| Benzo(a)pyrene | 3400 | 2600 | ug/Kg | 03/03/15 | DD | SW8270D | |
| Benzo(b)fluoranthene | 4000 | 2600 | ug/Kg | 03/03/15 | DD | SW8270D | |
| Benzo(ghi)perylene | ND | 2600 | ug/Kg | 03/03/15 | DD | SW8270D | |
| Benzo(k)fluoranthene | ND | 2600 | ug/Kg | 03/03/15 | DD | SW8270D | |
| Benzyl butyl phthalate | ND | 2600 | ug/Kg | 03/03/15 | DD | SW8270D | |
| Bis(2-chloroethoxy)methane | ND | 2600 | ug/Kg | 03/03/15 | DD | SW8270D | |
| Bis(2-chloroethyl)ether | ND | 3700 | ug/Kg | 03/03/15 | DD | SW8270D | |
| Bis(2-chloroisopropyl)ether | ND | 2600 | ug/Kg | 03/03/15 | DD | SW8270D | 1 |
| Bis(2-ethylhexyl)phthalate | ND | 2600 | ug/Kg | 03/03/15 | DD | SW8270D | |
| Caprolactam | ND | 2600 | ug/Kg | 03/03/15 | DD | SW8270D | |
| Carbazole | ND | 11000 | ug/Kg | 03/03/15 | DD | SW8270D | |
| Chrysene | 2900 | 2600 | ug/Kg | 03/03/15 | DD | SW8270D | |
| Dibenz(a,h)anthracene | ND | 2600 | ug/Kg | 03/03/15 | DD | SW8270D | |
| Dibenzofuran | ND | 2600 | ug/Kg | 03/03/15 | DD | SW8270D | |
| Diethyl phthalate | ND | 2600 | ug/Kg | 03/03/15 | DD | SW8270D | |
| Dimethylphthalate | ND | 2600 | ug/Kg | 03/03/15 | DD | SW8270D | |
| Di-n-butylphthalate | ND | 2600 | ug/Kg | 03/03/15 | DD | SW8270D | |
| Di-n-octylphthalate | ND | 2600 | ug/Kg | 03/03/15 | DD | SW8270D | |
| Fluoranthene | 6700 | 2600 | ug/Kg | 03/03/15 | DD | SW8270D | |
| Fluorene | ND | 2600 | ug/Kg | 03/03/15 | DD | SW8270D | |
| Hexachlorobenzene | ND | 2600 | ug/Kg | 03/03/15 | DD | SW8270D | |
| Hexachlorobutadiene | ND | 2600 | ug/Kg | 03/03/15 | DD | SW8270D | |
| Hexachlorocyclopentadiene | ND | 2600 | ug/Kg | 03/03/15 | DD | SW8270D | |
| Hexachloroethane | ND | 2600 | ug/Kg | 03/03/15 | DD | SW8270D | |
| Indeno(1,2,3-cd)pyrene | ND | 2600 | ug/Kg | 03/03/15 | DD | SW8270D | |
| Isophorone | ND | 2600 | ug/Kg | 03/03/15 | DD | SW8270D | |
| Naphthalene | ND | 2600 | ug/Kg | 03/03/15 | DD | SW8270D | |
| Nitrobenzene | ND | 2600 | ug/Kg | 03/03/15 | DD | SW8270D | |
| N-Nitrosodimethylamine | ND | 3700 | ug/Kg | 03/03/15 | DD | SW8270D | |
| N-Nitrosodi-n-propylamine | ND | 2600 | ug/Kg | 03/03/15 | DD | SW8270D | |
| N-Nitrosodiphenylamine | ND | 3700 | ug/Kg | 03/03/15 | DD | SW8270D | |
| Pentachlorophenol | ND | 3700 | ug/Kg | 03/03/15 | DD | SW8270D | |
| Phenanthrene | 3600 | 2600 | ug/Kg | 03/03/15 | DD | SW8270D | |
| Phenol | ND | 2600 | ug/Kg | 03/03/15 | DD | SW8270D | |
| Pyrene | 5400 | 2600 | ug/Kg | 03/03/15 | DD | SW8270D | |
| **QA/QC Surrogates** | | | | | | | |
| % 2,4,6-Tribromophenol | Diluted Out | | % | 03/03/15 | DD | 30 - 130 % | |

Project ID: 109 MARBLEDALE RD TUCKAHOE NY
Client ID: TB-11 4-6

Phoenix I.D.: BH78386

| Parameter | Result | RL/ PQL | Units | Date/Time | By | Reference |
|---|---|---|---|---|---|---|
| % 2-Fluorobiphenyl | Diluted Out | | % | 03/03/15 | DD | 30 - 130 % |
| % 2-Fluorophenol | Diluted Out | | % | 03/03/15 | DD | 30 - 130 % |
| % Nitrobenzene-d5 | Diluted Out | | % | 03/03/15 | DD | 30 - 130 % |
| % Phenol-d5 | Diluted Out | | % | 03/03/15 | DD | 30 - 130 % |
| % Terphenyl-d14 | Diluted Out | | % | 03/03/15 | DD | 30 - 130 % |
| SVOA Library Search Top 15 | Completed | | | 03/04/15 | DD | |

1 = This parameter is not certified by NY NELAC for this matrix. NY NELAC does not offer certification for all parameters at this time.

**RL/PQL=Reporting/Practical Quantitation Level (Equivalent to NELAC LOQ, Limit of Quanitation) ND=Not Detected BRL=Below Reporting Level**

## Comments:

Please be advised that the NY 375 soil criteria for chromium are based on hexavalent chromium and trivalent chromium.

All soils, solids and sludges are reported on a dry weight basis unless otherwise noted in the sample comments.

If there are any questions regarding this data, please call Phoenix Client Services at extension 200.
This report must not be reproduced except in full as defined by the attached chain of custody.

**Phyllis Shiller, Laboratory Director**
**March 09, 2015**
**Reviewed and Released by: Phyllis Shiller, Laboratory Director**

PHOENIX

Environmental Laboratories, Inc.
587 East Middle Turnpike, P.O.Box 370, Manchester, CT 06045
Tel. (860) 645-1102 Fax (860) 645-0823

ACCREDITED IN ACCORDANCE WITH nelac NY # 11301

# Analysis Report

March 09, 2015

FOR: Attn: Mr. Tim Carr
HydroEnvironmental Solutions, Inc.
One Deans Bridge Rd
Somers NY 10589

| Sample Information | | Custody Information | | Date | Time |
|---|---|---|---|---|---|
| Matrix: | SOLID | Collected by: | RG | 02/27/15 | 0:00 |
| Location Code: | HESNY-TUCK | Received by: | SW | 03/02/15 | 15:48 |
| Rush Request: | 72 Hour | Analyzed by: | see "By" below | | |
| P.O.#: | | | | | |

## Laboratory Data

SDG ID: GBH78384
Phoenix ID: BH78387

Project ID: 109 MARBLEDALE RD TUCKAHOE NY
Client ID: TB-11 21-23

| Parameter | Result | RL/ PQL | Units | Date/Time | By | Reference |
|---|---|---|---|---|---|---|
| Silver | < 0.36 | 0.36 | mg/Kg | 03/03/15 | LK | SW6010C |
| Aluminum | 3670 | 54 | mg/Kg | 03/03/15 | EK | SW6010C |
| Arsenic | 3.2 | 0.7 | mg/Kg | 03/03/15 | LK | SW6010C |
| Barium | 29.3 | 0.36 | mg/Kg | 03/03/15 | LK | SW6010C |
| Beryllium | < 0.29 | 0.29 | mg/Kg | 03/03/15 | LK | SW6010C |
| Calcium | 86900 | 54 | mg/Kg | 03/03/15 | EK | SW6010C |
| Cadmium | < 0.36 | 0.36 | mg/Kg | 03/03/15 | LK | SW6010C |
| Cobalt | 4.61 | 0.36 | mg/Kg | 03/03/15 | LK | SW6010C |
| Chromium | 16.6 | 0.36 | mg/Kg | 03/03/15 | LK | SW6010C |
| Copper | 17.7 | 0.36 | mg/kg | 03/03/15 | LK | SW6010C |
| Iron | 8550 | 5.4 | mg/Kg | 03/03/15 | LK | SW6010C |
| Mercury | < 0.03 | 0.03 | mg/Kg | 03/03/15 | MA | SW7471B |
| Potassium | 1610 | 5.4 | mg/Kg | 03/03/15 | LK | SW6010C |
| Magnesium | 48600 | 54 | mg/Kg | 03/03/15 | EK | SW6010C |
| Manganese | 165 | 3.6 | mg/Kg | 03/03/15 | EK | SW6010C |
| Sodium | 261 | 5.4 | mg/Kg | 03/03/15 | LK | SW6010C |
| Nickel | 11.4 | 0.36 | mg/Kg | 03/03/15 | LK | SW6010C |
| Lead | 37.5 | 0.36 | mg/Kg | 03/03/15 | LK | SW6010C |
| Antimony | < 3.6 | 3.6 | mg/Kg | 03/03/15 | LK | SW6010C |
| Selenium | < 1.5 | 1.5 | mg/Kg | 03/03/15 | LK | SW6010C |
| Thallium | < 3.3 | 3.3 | mg/Kg | 03/03/15 | LK | SW6010C |
| Vanadium | 33.8 | 0.36 | mg/Kg | 03/03/15 | LK | SW6010C |
| Zinc | 36.9 | 0.36 | mg/Kg | 03/03/15 | LK | SW6010C |
| Percent Solid | 85 | | % | 03/02/15 | i | SW846-%Solid |
| Total Cyanide | < 0.59 | 0.59 | mg/Kg | 03/04/15 | O/B/E | SW9010C/SW90 |
| Soil Extraction for PCB | Completed | | | 03/02/15 | CC/H | SW3545A |
| Soil Extraction for SVOA | Completed | | | 03/02/15 | CJ/VH | SW3545A |
| Mercury Digestion | Completed | | | 03/03/15 | I/I | SW7471B |

Project ID: 109 MARBLEDALE RD TUCKAHOE NY
Client ID: TB-11 21-23

Phoenix I.D.: BH78387

| Parameter | Result | RL/ PQL | Units | Date/Time | By | Reference |
|---|---|---|---|---|---|---|
| Total Metals Digest | Completed | | | 03/02/15 | CB/AG | SW3050B |
| **Polychlorinated Biphenyls** | | | | | | |
| PCB-1016 | ND | 77 | ug/Kg | 03/03/15 | AW | SW8082A |
| PCB-1221 | ND | 77 | ug/Kg | 03/03/15 | AW | SW8082A |
| PCB-1232 | ND | 77 | ug/Kg | 03/03/15 | AW | SW8082A |
| PCB-1242 | ND | 77 | ug/Kg | 03/03/15 | AW | SW8082A |
| PCB-1248 | ND | 77 | ug/Kg | 03/03/15 | AW | SW8082A |
| PCB-1254 | ND | 77 | ug/Kg | 03/03/15 | AW | SW8082A |
| PCB-1260 | ND | 77 | ug/Kg | 03/03/15 | AW | SW8082A |
| PCB-1262 | ND | 77 | ug/Kg | 03/03/15 | AW | SW8082A |
| PCB-1268 | ND | 77 | ug/Kg | 03/03/15 | AW | SW8082A |
| **QA/QC Surrogates** | | | | | | |
| % DCBP | 86 | | % | 03/03/15 | AW | 30 - 150 % |
| % TCMX | 84 | | % | 03/03/15 | AW | 30 - 150 % |
| **Volatiles (TCL)** | | | | | | |
| 1,1,1-Trichloroethane | ND | 6.1 | ug/kg | 03/03/15 | JLI | SW8260C |
| 1,1,2,2-Tetrachloroethane | ND | 6.1 | ug/kg | 03/03/15 | JLI | SW8260C |
| 1,1,2-Trichloroethane | ND | 6.1 | ug/kg | 03/03/15 | JLI | SW8260C |
| 1,1-Dichloroethane | ND | 6.1 | ug/kg | 03/03/15 | JLI | SW8260C |
| 1,1-Dichloroethene | ND | 6.1 | ug/kg | 03/03/15 | JLI | SW8260C |
| 1,2,3-Trichlorobenzene | ND | 6.1 | ug/kg | 03/03/15 | JLI | SW8260C |
| 1,2,4-Trichlorobenzene | ND | 6.1 | ug/kg | 03/03/15 | JLI | SW8260C |
| 1,2-Dibromo-3-chloropropane | ND | 6.1 | ug/kg | 03/03/15 | JLI | SW8260C |
| 1,2-Dibromoethane | ND | 6.1 | ug/kg | 03/03/15 | JLI | SW8260C |
| 1,2-Dichlorobenzene | ND | 6.1 | ug/kg | 03/03/15 | JLI | SW8260C |
| 1,2-Dichloroethane | ND | 6.1 | ug/kg | 03/03/15 | JLI | SW8260C |
| 1,2-Dichloropropane | ND | 6.1 | ug/kg | 03/03/15 | JLI | SW8260C |
| 1,3-Dichlorobenzene | ND | 6.1 | ug/kg | 03/03/15 | JLI | SW8260C |
| 1,4-Dichlorobenzene | ND | 6.1 | ug/kg | 03/03/15 | JLI | SW8260C |
| 2-Hexanone | ND | 30 | ug/kg | 03/03/15 | JLI | SW8260C |
| 4-Methyl-2-pentanone | ND | 30 | ug/kg | 03/03/15 | JLI | SW8260C |
| Acetone | ND | 50 | ug/kg | 03/03/15 | JLI | SW8260C |
| Benzene | ND | 6.1 | ug/kg | 03/03/15 | JLI | SW8260C |
| Bromochloromethane | ND | 6.1 | ug/kg | 03/03/15 | JLI | SW8260C |
| Bromodichloromethane | ND | 6.1 | ug/kg | 03/03/15 | JLI | SW8260C |
| Bromoform | ND | 6.1 | ug/kg | 03/03/15 | JLI | SW8260C |
| Bromomethane | ND | 6.1 | ug/kg | 03/03/15 | JLI | SW8260C |
| Carbon Disulfide | ND | 6.1 | ug/kg | 03/03/15 | JLI | SW8260C |
| Carbon tetrachloride | ND | 6.1 | ug/kg | 03/03/15 | JLI | SW8260C |
| Chlorobenzene | ND | 6.1 | ug/kg | 03/03/15 | JLI | SW8260C |
| Chloroethane | ND | 6.1 | ug/kg | 03/03/15 | JLI | SW8260C |
| Chloroform | ND | 6.1 | ug/kg | 03/03/15 | JLI | SW8260C |
| Chloromethane | ND | 6.1 | ug/kg | 03/03/15 | JLI | SW8260C |
| cis-1,2-Dichloroethene | ND | 6.1 | ug/kg | 03/03/15 | JLI | SW8260C |
| cis-1,3-Dichloropropene | ND | 6.1 | ug/kg | 03/03/15 | JLI | SW8260C |
| Cyclohexane | ND | 6.1 | ug/kg | 03/03/15 | JLI | SW8260C |
| Dibromochloromethane | ND | 6.1 | ug/kg | 03/03/15 | JLI | SW8260C |
| Dichlorodifluoromethane | ND | 6.1 | ug/kg | 03/03/15 | JLI | SW8260C |

Project ID: 109 MARBLEDALE RD TUCKAHOE NY
Client ID: TB-11 21-23

Phoenix I.D.: BH78387

| Parameter | Result | RL/ PQL | Units | Date/Time | By | Reference | |
|---|---|---|---|---|---|---|---|
| Ethylbenzene | ND | 6.1 | ug/kg | 03/03/15 | JLI | SW8260C | |
| Isopropylbenzene | ND | 6.1 | ug/kg | 03/03/15 | JLI | SW8260C | |
| m&p-Xylene | ND | 6.1 | ug/kg | 03/03/15 | JLI | SW8260C | |
| Methyl ethyl ketone | ND | 36 | ug/kg | 03/03/15 | JLI | SW8260C | |
| Methyl t-butyl ether (MTBE) | ND | 12 | ug/kg | 03/03/15 | JLI | SW8260C | |
| Methylacetate | ND | 4.8 | ug/kg | 03/03/15 | JLI | SW8260C | |
| Methylcyclohexane | ND | 6.1 | ug/kg | 03/03/15 | JLI | SW8260C | |
| Methylene chloride | ND | 6.1 | ug/kg | 03/03/15 | JLI | SW8260C | |
| o-Xylene | ND | 6.1 | ug/kg | 03/03/15 | JLI | SW8260C | |
| Styrene | ND | 6.1 | ug/kg | 03/03/15 | JLI | SW8260C | |
| Tetrachloroethene | ND | 6.1 | ug/kg | 03/03/15 | JLI | SW8260C | |
| Toluene | ND | 6.1 | ug/kg | 03/03/15 | JLI | SW8260C | |
| Total Xylenes | ND | 6.1 | ug/kg | 03/03/15 | JLI | SW8260C | |
| trans-1,2-Dichloroethene | ND | 6.1 | ug/kg | 03/03/15 | JLI | SW8260C | |
| trans-1,3-Dichloropropene | ND | 6.1 | ug/kg | 03/03/15 | JLI | SW8260C | |
| Trichloroethene | ND | 6.1 | ug/kg | 03/03/15 | JLI | SW8260C | |
| Trichlorofluoromethane | ND | 6.1 | ug/kg | 03/03/15 | JLI | SW8260C | |
| Trichlorotrifluoroethane | ND | 6.1 | ug/kg | 03/03/15 | JLI | SW8260C | |
| Vinyl chloride | ND | 6.1 | ug/kg | 03/03/15 | JLI | SW8260C | |
| **QA/QC Surrogates** | | | | | | | |
| % 1,2-dichlorobenzene-d4 | 100 | | % | 03/03/15 | JLI | 70 - 130 % | |
| % Bromofluorobenzene | 97 | | % | 03/03/15 | JLI | 70 - 130 % | |
| % Dibromofluoromethane | 74 | | % | 03/03/15 | JLI | 70 - 130 % | |
| % Toluene-d8 | 97 | | % | 03/03/15 | JLI | 70 - 130 % | |
| **1,4-dioxane** | | | | | | | |
| 1,4-dioxane | ND | 100 | ug/kg | 03/03/15 | JLI | SW8260C | |
| **Semivolatiles** | | | | | | | |
| 1,1-Biphenyl | ND | 2700 | ug/Kg | 03/03/15 | DD | SW8270D | |
| 1,2,4,5-Tetrachlorobenzene | ND | 2700 | ug/Kg | 03/03/15 | DD | SW8270D | |
| 2,3,4,6-tetrachlorophenol | ND | 2700 | ug/Kg | 03/03/15 | DD | SW8270D | |
| 2,4,5-Trichlorophenol | ND | 2700 | ug/Kg | 03/03/15 | DD | SW8270D | |
| 2,4,6-Trichlorophenol | ND | 2700 | ug/Kg | 03/03/15 | DD | SW8270D | |
| 2,4-Dichlorophenol | ND | 2700 | ug/Kg | 03/03/15 | DD | SW8270D | |
| 2,4-Dimethylphenol | ND | 2700 | ug/Kg | 03/03/15 | DD | SW8270D | |
| 2,4-Dinitrophenol | ND | 6200 | ug/Kg | 03/03/15 | DD | SW8270D | |
| 2,4-Dinitrotoluene | ND | 2700 | ug/Kg | 03/03/15 | DD | SW8270D | |
| 2,6-Dinitrotoluene | ND | 2700 | ug/Kg | 03/03/15 | DD | SW8270D | |
| 2-Chloronaphthalene | ND | 2700 | ug/Kg | 03/03/15 | DD | SW8270D | |
| 2-Chlorophenol | ND | 2700 | ug/Kg | 03/03/15 | DD | SW8270D | |
| 2-Methylnaphthalene | ND | 2700 | ug/Kg | 03/03/15 | DD | SW8270D | |
| 2-Methylphenol (o-cresol) | ND | 2700 | ug/Kg | 03/03/15 | DD | SW8270D | |
| 2-Nitroaniline | ND | 6200 | ug/Kg | 03/03/15 | DD | SW8270D | |
| 2-Nitrophenol | ND | 2700 | ug/Kg | 03/03/15 | DD | SW8270D | |
| 3&4-Methylphenol (m&p-cresol) | ND | 3900 | ug/Kg | 03/03/15 | DD | SW8270D | 1 |
| 3,3'-Dichlorobenzidine | ND | 4700 | ug/Kg | 03/03/15 | DD | SW8270D | |
| 3-Nitroaniline | ND | 6200 | ug/Kg | 03/03/15 | DD | SW8270D | |
| 4,6-Dinitro-2-methylphenol | ND | 11000 | ug/Kg | 03/03/15 | DD | SW8270D | |
| 4-Bromophenyl phenyl ether | ND | 3900 | ug/Kg | 03/03/15 | DD | SW8270D | |

Project ID: 109 MARBLEDALE RD TUCKAHOE NY
Client ID: TB-11 21-23

Phoenix I.D.: BH78387

| Parameter | Result | RL/ PQL | Units | Date/Time | By | Reference | |
|---|---|---|---|---|---|---|---|
| 4-Chloro-3-methylphenol | ND | 2700 | ug/Kg | 03/03/15 | DD | SW8270D | |
| 4-Chloroaniline | ND | 2700 | ug/Kg | 03/03/15 | DD | SW8270D | |
| 4-Chlorophenyl phenyl ether | ND | 2700 | ug/Kg | 03/03/15 | DD | SW8270D | |
| 4-Nitroaniline | ND | 6200 | ug/Kg | 03/03/15 | DD | SW8270D | |
| 4-Nitrophenol | ND | 11000 | ug/Kg | 03/03/15 | DD | SW8270D | |
| Acenaphthene | ND | 2700 | ug/Kg | 03/03/15 | DD | SW8270D | |
| Acenaphthylene | ND | 2700 | ug/Kg | 03/03/15 | DD | SW8270D | |
| Acetophenone | ND | 2700 | ug/Kg | 03/03/15 | DD | SW8270D | |
| Anthracene | ND | 2700 | ug/Kg | 03/03/15 | DD | SW8270D | |
| Atrazine | ND | 2700 | ug/Kg | 03/03/15 | DD | SW8270D | |
| Benz(a)anthracene | 3700 | 2700 | ug/Kg | 03/03/15 | DD | SW8270D | |
| Benzaldehyde | ND | 2700 | ug/Kg | 03/03/15 | DD | SW8270D | |
| Benzo(a)pyrene | 3000 | 2700 | ug/Kg | 03/03/15 | DD | SW8270D | |
| Benzo(b)fluoranthene | 3900 | 2700 | ug/Kg | 03/03/15 | DD | SW8270D | |
| Benzo(ghi)perylene | ND | 2700 | ug/Kg | 03/03/15 | DD | SW8270D | |
| Benzo(k)fluoranthene | ND | 2700 | ug/Kg | 03/03/15 | DD | SW8270D | |
| Benzyl butyl phthalate | ND | 2700 | ug/Kg | 03/03/15 | DD | SW8270D | |
| Bis(2-chloroethoxy)methane | ND | 2700 | ug/Kg | 03/03/15 | DD | SW8270D | |
| Bis(2-chloroethyl)ether | ND | 3900 | ug/Kg | 03/03/15 | DD | SW8270D | |
| Bis(2-chloroisopropyl)ether | ND | 2700 | ug/Kg | 03/03/15 | DD | SW8270D | 1 |
| Bis(2-ethylhexyl)phthalate | ND | 2700 | ug/Kg | 03/03/15 | DD | SW8270D | |
| Caprolactam | ND | 2700 | ug/Kg | 03/03/15 | DD | SW8270D | |
| Carbazole | ND | 11000 | ug/Kg | 03/03/15 | DD | SW8270D | |
| Chrysene | 3300 | 2700 | ug/Kg | 03/03/15 | DD | SW8270D | |
| Dibenz(a,h)anthracene | ND | 2700 | ug/Kg | 03/03/15 | DD | SW8270D | |
| Dibenzofuran | ND | 2700 | ug/Kg | 03/03/15 | DD | SW8270D | |
| Diethyl phthalate | ND | 2700 | ug/Kg | 03/03/15 | DD | SW8270D | |
| Dimethylphthalate | ND | 2700 | ug/Kg | 03/03/15 | DD | SW8270D | |
| Di-n-butylphthalate | ND | 2700 | ug/Kg | 03/03/15 | DD | SW8270D | |
| Di-n-octylphthalate | ND | 2700 | ug/Kg | 03/03/15 | DD | SW8270D | |
| Fluoranthene | 9100 | 2700 | ug/Kg | 03/03/15 | DD | SW8270D | |
| Fluorene | ND | 2700 | ug/Kg | 03/03/15 | DD | SW8270D | |
| Hexachlorobenzene | ND | 2700 | ug/Kg | 03/03/15 | DD | SW8270D | |
| Hexachlorobutadiene | ND | 2700 | ug/Kg | 03/03/15 | DD | SW8270D | |
| Hexachlorocyclopentadiene | ND | 2700 | ug/Kg | 03/03/15 | DD | SW8270D | |
| Hexachloroethane | ND | 2700 | ug/Kg | 03/03/15 | DD | SW8270D | |
| Indeno(1,2,3-cd)pyrene | ND | 2700 | ug/Kg | 03/03/15 | DD | SW8270D | |
| Isophorone | ND | 2700 | ug/Kg | 03/03/15 | DD | SW8270D | |
| Naphthalene | ND | 2700 | ug/Kg | 03/03/15 | DD | SW8270D | |
| Nitrobenzene | ND | 2700 | ug/Kg | 03/03/15 | DD | SW8270D | |
| N-Nitrosodimethylamine | ND | 3900 | ug/Kg | 03/03/15 | DD | SW8270D | |
| N-Nitrosodi-n-propylamine | ND | 2700 | ug/Kg | 03/03/15 | DD | SW8270D | |
| N-Nitrosodiphenylamine | ND | 3900 | ug/Kg | 03/03/15 | DD | SW8270D | |
| Pentachlorophenol | ND | 3900 | ug/Kg | 03/03/15 | DD | SW8270D | |
| Phenanthrene | 6500 | 2700 | ug/Kg | 03/03/15 | DD | SW8270D | |
| Phenol | ND | 2700 | ug/Kg | 03/03/15 | DD | SW8270D | |
| Pyrene | 7400 | 2700 | ug/Kg | 03/03/15 | DD | SW8270D | |
| **QA/QC Surrogates** | | | | | | | |
| % 2,4,6-Tribromophenol | Diluted Out | | % | 03/03/15 | DD | 30 - 130 % | |

Project ID: 109 MARBLEDALE RD TUCKAHOE NY
Client ID: TB-11 21-23

Phoenix I.D.: BH78387

| Parameter | Result | RL/ PQL | Units | Date/Time | By | Reference |
|---|---|---|---|---|---|---|
| % 2-Fluorobiphenyl | Diluted Out | | % | 03/03/15 | DD | 30 - 130 % |
| % 2-Fluorophenol | Diluted Out | | % | 03/03/15 | DD | 30 - 130 % |
| % Nitrobenzene-d5 | Diluted Out | | % | 03/03/15 | DD | 30 - 130 % |
| % Phenol-d5 | Diluted Out | | % | 03/03/15 | DD | 30 - 130 % |
| % Terphenyl-d14 | Diluted Out | | % | 03/03/15 | DD | 30 - 130 % |
| SVOA Library Search Top 15 | Completed | | | 03/04/15 | DD | |

1 = This parameter is not certified by NY NELAC for this matrix. NY NELAC does not offer certification for all parameters at this time.

**RL/PQL=Reporting/Practical Quantitation Level (Equivalent to NELAC LOQ, Limit of Quanitation) ND=Not Detected BRL=Below Reporting Level**

## Comments:

Please be advised that the NY 375 soil criteria for chromium are based on hexavalent chromium and trivalent chromium.

All soils, solids and sludges are reported on a dry weight basis unless otherwise noted in the sample comments.

If there are any questions regarding this data, please call Phoenix Client Services at extension 200.
This report must not be reproduced except in full as defined by the attached chain of custody.

**Phyllis Shiller, Laboratory Director**
**March 09, 2015**
**Reviewed and Released by: Phyllis Shiller, Laboratory Director**

PHOENIX

Environmental Laboratories, Inc.
587 East Middle Turnpike, P.O.Box 370, Manchester, CT 06045
Tel. (860) 645-1102 Fax (860) 645-0823

ACCREDITED IN ACCORDANCE WITH nelac NY # 11301

# Analysis Report

March 09, 2015

FOR: Attn: Mr. Tim Carr
HydroEnvironmental Solutions, Inc.
One Deans Bridge Rd
Somers NY 10589

| Sample Information | | Custody Information | | Date | Time |
|---|---|---|---|---|---|
| Matrix: | SOLID | Collected by: | RG | 02/27/15 | 0:00 |
| Location Code: | HESNY-TUCK | Received by: | SW | 03/02/15 | 15:48 |
| Rush Request: | 72 Hour | Analyzed by: | see "By" below | | |
| P.O.#: | | | | | |

## Laboratory Data

SDG ID: GBH78384
Phoenix ID: BH78388

Project ID: 109 MARBLEDALE RD TUCKAHOE NY
Client ID: TB-8 2-4

| Parameter | Result | RL/ PQL | Units | Date/Time | By | Reference |
|---|---|---|---|---|---|---|
| Silver | < 0.39 | 0.39 | mg/Kg | 03/03/15 | LK | SW6010C |
| Aluminum | 7340 | 58 | mg/Kg | 03/03/15 | EK | SW6010C |
| Arsenic | 4.7 | 0.8 | mg/Kg | 03/03/15 | LK | SW6010C |
| Barium | 195 | 0.39 | mg/Kg | 03/03/15 | LK | SW6010C |
| Beryllium | < 0.31 | 0.31 | mg/Kg | 03/03/15 | LK | SW6010C |
| Calcium | 108000 | 58 | mg/Kg | 03/03/15 | EK | SW6010C |
| Cadmium | < 0.39 | 0.39 | mg/Kg | 03/03/15 | LK | SW6010C |
| Cobalt | 4.69 | 0.39 | mg/Kg | 03/03/15 | LK | SW6010C |
| Chromium | 12.9 | 0.39 | mg/Kg | 03/03/15 | LK | SW6010C |
| Copper | 37.7 | 0.39 | mg/kg | 03/03/15 | LK | SW6010C |
| Iron | 18800 | 58 | mg/Kg | 03/03/15 | EK | SW6010C |
| Mercury | < 0.03 | 0.03 | mg/Kg | 03/03/15 | MA | SW7471B |
| Potassium | 1520 | 5.8 | mg/Kg | 03/03/15 | LK | SW6010C |
| Magnesium | 66500 | 580 | mg/Kg | 03/04/15 | LK | SW6010C |
| Manganese | 282 | 3.9 | mg/Kg | 03/03/15 | EK | SW6010C |
| Sodium | 101 | 5.8 | mg/Kg | 03/03/15 | LK | SW6010C |
| Nickel | 10.7 | 0.39 | mg/Kg | 03/03/15 | LK | SW6010C |
| Lead | 30.3 | 0.39 | mg/Kg | 03/03/15 | LK | SW6010C |
| Antimony | < 3.9 | 3.9 | mg/Kg | 03/03/15 | LK | SW6010C |
| Selenium | < 1.5 | 1.5 | mg/Kg | 03/03/15 | LK | SW6010C |
| Thallium | < 3.5 | 3.5 | mg/Kg | 03/03/15 | LK | SW6010C |
| Vanadium | 17.6 | 0.39 | mg/Kg | 03/03/15 | LK | SW6010C |
| Zinc | 229 | 3.9 | mg/Kg | 03/03/15 | EK | SW6010C |
| Percent Solid | 90 | | % | 03/02/15 | i | SW846-%Solid |
| Total Cyanide | 1.66 | 0.56 | mg/Kg | 03/04/15 | O/B/E | SW9010C/SW90 |
| Soil Extraction for PCB | Completed | | | 03/02/15 | CC/H | SW3545A |
| Soil Extraction for SVOA | Completed | | | 03/02/15 | CJ/VH | SW3545A |
| Mercury Digestion | Completed | | | 03/03/15 | I/I | SW7471B |

Project ID: 109 MARBLEDALE RD TUCKAHOE NY
Client ID: TB-8 2-4

Phoenix I.D.: BH78388

| Parameter | Result | RL/ PQL | Units | Date/Time | By | Reference |
|---|---|---|---|---|---|---|
| Total Metals Digest | Completed | | | 03/02/15 | CB/AG | SW3050B |
| **Polychlorinated Biphenyls** | | | | | | |
| PCB-1016 | ND | 74 | ug/Kg | 03/03/15 | AW | SW8082A |
| PCB-1221 | ND | 74 | ug/Kg | 03/03/15 | AW | SW8082A |
| PCB-1232 | ND | 74 | ug/Kg | 03/03/15 | AW | SW8082A |
| PCB-1242 | ND | 74 | ug/Kg | 03/03/15 | AW | SW8082A |
| PCB-1248 | ND | 74 | ug/Kg | 03/03/15 | AW | SW8082A |
| PCB-1254 | ND | 74 | ug/Kg | 03/03/15 | AW | SW8082A |
| PCB-1260 | ND | 74 | ug/Kg | 03/03/15 | AW | SW8082A |
| PCB-1262 | ND | 74 | ug/Kg | 03/03/15 | AW | SW8082A |
| PCB-1268 | ND | 74 | ug/Kg | 03/03/15 | AW | SW8082A |
| **QA/QC Surrogates** | | | | | | |
| % DCBP | 78 | | % | 03/03/15 | AW | 30 - 150 % |
| % TCMX | 82 | | % | 03/03/15 | AW | 30 - 150 % |
| **Volatiles (TCL)** | | | | | | |
| 1,1,1-Trichloroethane | ND | 5.6 | ug/kg | 03/03/15 | JLI | SW8260C |
| 1,1,2,2-Tetrachloroethane | ND | 5.6 | ug/kg | 03/03/15 | JLI | SW8260C |
| 1,1,2-Trichloroethane | ND | 5.6 | ug/kg | 03/03/15 | JLI | SW8260C |
| 1,1-Dichloroethane | ND | 5.6 | ug/kg | 03/03/15 | JLI | SW8260C |
| 1,1-Dichloroethene | ND | 5.6 | ug/kg | 03/03/15 | JLI | SW8260C |
| 1,2,3-Trichlorobenzene | ND | 5.6 | ug/kg | 03/03/15 | JLI | SW8260C |
| 1,2,4-Trichlorobenzene | ND | 5.6 | ug/kg | 03/03/15 | JLI | SW8260C |
| 1,2-Dibromo-3-chloropropane | ND | 5.6 | ug/kg | 03/03/15 | JLI | SW8260C |
| 1,2-Dibromoethane | ND | 5.6 | ug/kg | 03/03/15 | JLI | SW8260C |
| 1,2-Dichlorobenzene | ND | 5.6 | ug/kg | 03/03/15 | JLI | SW8260C |
| 1,2-Dichloroethane | ND | 5.6 | ug/kg | 03/03/15 | JLI | SW8260C |
| 1,2-Dichloropropane | ND | 5.6 | ug/kg | 03/03/15 | JLI | SW8260C |
| 1,3-Dichlorobenzene | ND | 5.6 | ug/kg | 03/03/15 | JLI | SW8260C |
| 1,4-Dichlorobenzene | ND | 5.6 | ug/kg | 03/03/15 | JLI | SW8260C |
| 2-Hexanone | ND | 28 | ug/kg | 03/03/15 | JLI | SW8260C |
| 4-Methyl-2-pentanone | ND | 28 | ug/kg | 03/03/15 | JLI | SW8260C |
| Acetone | ND | 50 | ug/kg | 03/03/15 | JLI | SW8260C |
| Benzene | ND | 5.6 | ug/kg | 03/03/15 | JLI | SW8260C |
| Bromochloromethane | ND | 5.6 | ug/kg | 03/03/15 | JLI | SW8260C |
| Bromodichloromethane | ND | 5.6 | ug/kg | 03/03/15 | JLI | SW8260C |
| Bromoform | ND | 5.6 | ug/kg | 03/03/15 | JLI | SW8260C |
| Bromomethane | ND | 5.6 | ug/kg | 03/03/15 | JLI | SW8260C |
| Carbon Disulfide | ND | 5.6 | ug/kg | 03/03/15 | JLI | SW8260C |
| Carbon tetrachloride | ND | 5.6 | ug/kg | 03/03/15 | JLI | SW8260C |
| Chlorobenzene | ND | 5.6 | ug/kg | 03/03/15 | JLI | SW8260C |
| Chloroethane | ND | 5.6 | ug/kg | 03/03/15 | JLI | SW8260C |
| Chloroform | ND | 5.6 | ug/kg | 03/03/15 | JLI | SW8260C |
| Chloromethane | ND | 5.6 | ug/kg | 03/03/15 | JLI | SW8260C |
| cis-1,2-Dichloroethene | ND | 5.6 | ug/kg | 03/03/15 | JLI | SW8260C |
| cis-1,3-Dichloropropene | ND | 5.6 | ug/kg | 03/03/15 | JLI | SW8260C |
| Cyclohexane | ND | 5.6 | ug/kg | 03/03/15 | JLI | SW8260C |
| Dibromochloromethane | ND | 5.6 | ug/kg | 03/03/15 | JLI | SW8260C |
| Dichlorodifluoromethane | ND | 5.6 | ug/kg | 03/03/15 | JLI | SW8260C |

Project ID: 109 MARBLEDALE RD TUCKAHOE NY
Client ID: TB-8 2-4

Phoenix I.D.: BH78388

| Parameter | Result | RL/ PQL | Units | Date/Time | By | Reference | |
|---|---|---|---|---|---|---|---|
| Ethylbenzene | ND | 5.6 | ug/kg | 03/03/15 | JLI | SW8260C | |
| Isopropylbenzene | ND | 5.6 | ug/kg | 03/03/15 | JLI | SW8260C | |
| m&p-Xylene | ND | 5.6 | ug/kg | 03/03/15 | JLI | SW8260C | |
| Methyl ethyl ketone | ND | 33 | ug/kg | 03/03/15 | JLI | SW8260C | |
| Methyl t-butyl ether (MTBE) | ND | 11 | ug/kg | 03/03/15 | JLI | SW8260C | |
| Methylacetate | ND | 4.4 | ug/kg | 03/03/15 | JLI | SW8260C | |
| Methylcyclohexane | ND | 5.6 | ug/kg | 03/03/15 | JLI | SW8260C | |
| Methylene chloride | ND | 5.6 | ug/kg | 03/03/15 | JLI | SW8260C | |
| o-Xylene | ND | 5.6 | ug/kg | 03/03/15 | JLI | SW8260C | |
| Styrene | ND | 5.6 | ug/kg | 03/03/15 | JLI | SW8260C | |
| Tetrachloroethene | ND | 5.6 | ug/kg | 03/03/15 | JLI | SW8260C | |
| Toluene | ND | 5.6 | ug/kg | 03/03/15 | JLI | SW8260C | |
| Total Xylenes | ND | 5.6 | ug/kg | 03/03/15 | JLI | SW8260C | |
| trans-1,2-Dichloroethene | ND | 5.6 | ug/kg | 03/03/15 | JLI | SW8260C | |
| trans-1,3-Dichloropropene | ND | 5.6 | ug/kg | 03/03/15 | JLI | SW8260C | |
| Trichloroethene | 330 | 290 | ug/kg | 03/03/15 | JLI | SW8260C | |
| Trichlorofluoromethane | ND | 5.6 | ug/kg | 03/03/15 | JLI | SW8260C | |
| Trichlorotrifluoroethane | ND | 5.6 | ug/kg | 03/03/15 | JLI | SW8260C | |
| Vinyl chloride | ND | 5.6 | ug/kg | 03/03/15 | JLI | SW8260C | |
| **QA/QC Surrogates** | | | | | | | |
| % 1,2-dichlorobenzene-d4 | 97 | | % | 03/03/15 | JLI | 70 - 130 % | |
| % Bromofluorobenzene | 96 | | % | 03/03/15 | JLI | 70 - 130 % | |
| % Dibromofluoromethane | 91 | | % | 03/03/15 | JLI | 70 - 130 % | |
| % Toluene-d8 | 99 | | % | 03/03/15 | JLI | 70 - 130 % | |
| **1,4-dioxane** | | | | | | | |
| 1,4-dioxane | ND | 100 | ug/kg | 03/03/15 | JLI | SW8260C | |
| **Semivolatiles** | | | | | | | |
| 1,1-Biphenyl | ND | 260 | ug/Kg | 03/03/15 | DD | SW8270D | |
| 1,2,4,5-Tetrachlorobenzene | ND | 260 | ug/Kg | 03/03/15 | DD | SW8270D | |
| 2,3,4,6-tetrachlorophenol | ND | 260 | ug/Kg | 03/03/15 | DD | SW8270D | |
| 2,4,5-Trichlorophenol | ND | 260 | ug/Kg | 03/03/15 | DD | SW8270D | |
| 2,4,6-Trichlorophenol | ND | 260 | ug/Kg | 03/03/15 | DD | SW8270D | |
| 2,4-Dichlorophenol | ND | 260 | ug/Kg | 03/03/15 | DD | SW8270D | |
| 2,4-Dimethylphenol | ND | 260 | ug/Kg | 03/03/15 | DD | SW8270D | |
| 2,4-Dinitrophenol | ND | 590 | ug/Kg | 03/03/15 | DD | SW8270D | |
| 2,4-Dinitrotoluene | ND | 260 | ug/Kg | 03/03/15 | DD | SW8270D | |
| 2,6-Dinitrotoluene | ND | 260 | ug/Kg | 03/03/15 | DD | SW8270D | |
| 2-Chloronaphthalene | ND | 260 | ug/Kg | 03/03/15 | DD | SW8270D | |
| 2-Chlorophenol | ND | 260 | ug/Kg | 03/03/15 | DD | SW8270D | |
| 2-Methylnaphthalene | ND | 260 | ug/Kg | 03/03/15 | DD | SW8270D | |
| 2-Methylphenol (o-cresol) | ND | 260 | ug/Kg | 03/03/15 | DD | SW8270D | |
| 2-Nitroaniline | ND | 590 | ug/Kg | 03/03/15 | DD | SW8270D | |
| 2-Nitrophenol | ND | 260 | ug/Kg | 03/03/15 | DD | SW8270D | |
| 3&4-Methylphenol (m&p-cresol) | ND | 370 | ug/Kg | 03/03/15 | DD | SW8270D | 1 |
| 3,3'-Dichlorobenzidine | ND | 440 | ug/Kg | 03/03/15 | DD | SW8270D | |
| 3-Nitroaniline | ND | 590 | ug/Kg | 03/03/15 | DD | SW8270D | |
| 4,6-Dinitro-2-methylphenol | ND | 1100 | ug/Kg | 03/03/15 | DD | SW8270D | |
| 4-Bromophenyl phenyl ether | ND | 370 | ug/Kg | 03/03/15 | DD | SW8270D | |

Project ID: 109 MARBLEDALE RD TUCKAHOE NY
Client ID: TB-8 2-4

Phoenix I.D.: BH78388

| Parameter | Result | RL/ PQL | Units | Date/Time | By | Reference | |
|---|---|---|---|---|---|---|---|
| 4-Chloro-3-methylphenol | ND | 260 | ug/Kg | 03/03/15 | DD | SW8270D | |
| 4-Chloroaniline | ND | 260 | ug/Kg | 03/03/15 | DD | SW8270D | |
| 4-Chlorophenyl phenyl ether | ND | 260 | ug/Kg | 03/03/15 | DD | SW8270D | |
| 4-Nitroaniline | ND | 590 | ug/Kg | 03/03/15 | DD | SW8270D | |
| 4-Nitrophenol | ND | 1100 | ug/Kg | 03/03/15 | DD | SW8270D | |
| Acenaphthene | ND | 260 | ug/Kg | 03/03/15 | DD | SW8270D | |
| Acenaphthylene | ND | 260 | ug/Kg | 03/03/15 | DD | SW8270D | |
| Acetophenone | ND | 260 | ug/Kg | 03/03/15 | DD | SW8270D | |
| Anthracene | ND | 260 | ug/Kg | 03/03/15 | DD | SW8270D | |
| Atrazine | ND | 260 | ug/Kg | 03/03/15 | DD | SW8270D | |
| Benz(a)anthracene | 270 | 260 | ug/Kg | 03/03/15 | DD | SW8270D | |
| Benzaldehyde | ND | 260 | ug/Kg | 03/03/15 | DD | SW8270D | |
| Benzo(a)pyrene | 260 | 260 | ug/Kg | 03/03/15 | DD | SW8270D | |
| Benzo(b)fluoranthene | 350 | 260 | ug/Kg | 03/03/15 | DD | SW8270D | |
| Benzo(ghi)perylene | ND | 260 | ug/Kg | 03/03/15 | DD | SW8270D | |
| Benzo(k)fluoranthene | ND | 260 | ug/Kg | 03/03/15 | DD | SW8270D | |
| Benzyl butyl phthalate | ND | 260 | ug/Kg | 03/03/15 | DD | SW8270D | |
| Bis(2-chloroethoxy)methane | ND | 260 | ug/Kg | 03/03/15 | DD | SW8270D | |
| Bis(2-chloroethyl)ether | ND | 370 | ug/Kg | 03/03/15 | DD | SW8270D | |
| Bis(2-chloroisopropyl)ether | ND | 260 | ug/Kg | 03/03/15 | DD | SW8270D | 1 |
| Bis(2-ethylhexyl)phthalate | 900 | 260 | ug/Kg | 03/03/15 | DD | SW8270D | |
| Caprolactam | ND | 260 | ug/Kg | 03/03/15 | DD | SW8270D | |
| Carbazole | ND | 1100 | ug/Kg | 03/03/15 | DD | SW8270D | |
| Chrysene | 300 | 260 | ug/Kg | 03/03/15 | DD | SW8270D | |
| Dibenz(a,h)anthracene | ND | 260 | ug/Kg | 03/03/15 | DD | SW8270D | |
| Dibenzofuran | ND | 260 | ug/Kg | 03/03/15 | DD | SW8270D | |
| Diethyl phthalate | ND | 260 | ug/Kg | 03/03/15 | DD | SW8270D | |
| Dimethylphthalate | ND | 260 | ug/Kg | 03/03/15 | DD | SW8270D | |
| Di-n-butylphthalate | ND | 260 | ug/Kg | 03/03/15 | DD | SW8270D | |
| Di-n-octylphthalate | ND | 260 | ug/Kg | 03/03/15 | DD | SW8270D | |
| Fluoranthene | 670 | 260 | ug/Kg | 03/03/15 | DD | SW8270D | |
| Fluorene | ND | 260 | ug/Kg | 03/03/15 | DD | SW8270D | |
| Hexachlorobenzene | ND | 260 | ug/Kg | 03/03/15 | DD | SW8270D | |
| Hexachlorobutadiene | ND | 260 | ug/Kg | 03/03/15 | DD | SW8270D | |
| Hexachlorocyclopentadiene | ND | 260 | ug/Kg | 03/03/15 | DD | SW8270D | |
| Hexachloroethane | ND | 260 | ug/Kg | 03/03/15 | DD | SW8270D | |
| Indeno(1,2,3-cd)pyrene | ND | 260 | ug/Kg | 03/03/15 | DD | SW8270D | |
| Isophorone | ND | 260 | ug/Kg | 03/03/15 | DD | SW8270D | |
| Naphthalene | ND | 260 | ug/Kg | 03/03/15 | DD | SW8270D | |
| Nitrobenzene | ND | 260 | ug/Kg | 03/03/15 | DD | SW8270D | |
| N-Nitrosodimethylamine | ND | 370 | ug/Kg | 03/03/15 | DD | SW8270D | |
| N-Nitrosodi-n-propylamine | ND | 260 | ug/Kg | 03/03/15 | DD | SW8270D | |
| N-Nitrosodiphenylamine | ND | 370 | ug/Kg | 03/03/15 | DD | SW8270D | |
| Pentachlorophenol | ND | 370 | ug/Kg | 03/03/15 | DD | SW8270D | |
| Phenanthrene | 460 | 260 | ug/Kg | 03/03/15 | DD | SW8270D | |
| Phenol | ND | 260 | ug/Kg | 03/03/15 | DD | SW8270D | |
| Pyrene | 540 | 260 | ug/Kg | 03/03/15 | DD | SW8270D | |
| **QA/QC Surrogates** | | | | | | | |
| % 2,4,6-Tribromophenol | 73 | | % | 03/03/15 | DD | 30 - 130 % | |

Project ID: 109 MARBLEDALE RD TUCKAHOE NY
Client ID: TB-8 2-4

Phoenix I.D.: BH78388

| Parameter | Result | RL/ PQL | Units | Date/Time | By | Reference |
|---|---|---|---|---|---|---|
| % 2-Fluorobiphenyl | 75 | | % | 03/03/15 | DD | 30 - 130 % |
| % 2-Fluorophenol | 63 | | % | 03/03/15 | DD | 30 - 130 % |
| % Nitrobenzene-d5 | 71 | | % | 03/03/15 | DD | 30 - 130 % |
| % Phenol-d5 | 69 | | % | 03/03/15 | DD | 30 - 130 % |
| % Terphenyl-d14 | 88 | | % | 03/03/15 | DD | 30 - 130 % |
| SVOA Library Search Top 15 | Completed | | | 03/03/15 | DD | |

1 = This parameter is not certified by NY NELAC for this matrix. NY NELAC does not offer certification for all parameters at this time.

**RL/PQL=Reporting/Practical Quantitation Level (Equivalent to NELAC LOQ, Limit of Quanitation) ND=Not Detected BRL=Below Reporting Level**

## Comments:

Please be advised that the NY 375 soil criteria for chromium are based on hexavalent chromium and trivalent chromium.

All soils, solids and sludges are reported on a dry weight basis unless otherwise noted in the sample comments.

If there are any questions regarding this data, please call Phoenix Client Services at extension 200.
This report must not be reproduced except in full as defined by the attached chain of custody.

**Phyllis Shiller, Laboratory Director**
**March 09, 2015**
**Reviewed and Released by: Phyllis Shiller, Laboratory Director**

PHOENIX

Environmental Laboratories, Inc.
587 East Middle Turnpike, P.O.Box 370, Manchester, CT 06045
Tel. (860) 645-1102 Fax (860) 645-0823

ACCREDITED IN ACCORDANCE WITH nelac NY # 11301

# Analysis Report

March 09, 2015

FOR: Attn: Mr. Tim Carr
HydroEnvironmental Solutions, Inc.
One Deans Bridge Rd
Somers NY 10589

| Sample Information | | Custody Information | | Date | Time |
|---|---|---|---|---|---|
| Matrix: | SOLID | Collected by: | RG | 02/27/15 | 0:00 |
| Location Code: | HESNY-TUCK | Received by: | SW | 03/02/15 | 15:48 |
| Rush Request: | 72 Hour | Analyzed by: | see "By" below | | |
| P.O.#: | | | | | |

## Laboratory Data

SDG ID: GBH78384
Phoenix ID: BH78389

Project ID: 109 MARBLEDALE RD TUCKAHOE NY
Client ID: TB-8 20-22

| Parameter | Result | RL/ PQL | Units | Date/Time | By | Reference |
|---|---|---|---|---|---|---|
| Silver | < 0.34 | 0.34 | mg/Kg | 03/03/15 | LK | SW6010C |
| Aluminum | 5740 | 50 | mg/Kg | 03/03/15 | EK | SW6010C |
| Arsenic | 0.9 | 0.7 | mg/Kg | 03/03/15 | LK | SW6010C |
| Barium | 17.0 | 0.34 | mg/Kg | 03/03/15 | LK | SW6010C |
| Beryllium | < 0.27 | 0.27 | mg/Kg | 03/03/15 | LK | SW6010C |
| Calcium | 168000 | 5000 | mg/Kg | 03/04/15 | LK | SW6010C |
| Cadmium | < 0.34 | 0.34 | mg/Kg | 03/03/15 | LK | SW6010C |
| Cobalt | 2.68 | 0.34 | mg/Kg | 03/03/15 | LK | SW6010C |
| Chromium | 7.23 | 0.34 | mg/Kg | 03/03/15 | LK | SW6010C |
| Copper | 4.26 | 0.34 | mg/kg | 03/03/15 | LK | SW6010C |
| Iron | 5030 | 5.0 | mg/Kg | 03/03/15 | LK | SW6010C |
| Mercury | < 0.03 | 0.03 | mg/Kg | 03/03/15 | MA | SW7471B |
| Potassium | 353 | 5.0 | mg/Kg | 03/03/15 | LK | SW6010C |
| Magnesium | 83800 | 5000 | mg/Kg | 03/04/15 | LK | SW6010C |
| Manganese | 136 | 3.4 | mg/Kg | 03/03/15 | EK | SW6010C |
| Sodium | 31.9 | 5.0 | mg/Kg | 03/03/15 | LK | SW6010C |
| Nickel | 5.77 | 0.34 | mg/Kg | 03/03/15 | LK | SW6010C |
| Lead | 5.13 | 0.34 | mg/Kg | 03/03/15 | LK | SW6010C |
| Antimony | < 3.4 | 3.4 | mg/Kg | 03/03/15 | LK | SW6010C |
| Selenium | < 1.3 | 1.3 | mg/Kg | 03/03/15 | LK | SW6010C |
| Thallium | < 3.0 | 3.0 | mg/Kg | 03/03/15 | LK | SW6010C |
| Vanadium | 8.82 | 0.34 | mg/Kg | 03/03/15 | LK | SW6010C |
| Zinc | 158 | 3.4 | mg/Kg | 03/03/15 | EK | SW6010C |
| Percent Solid | 91 | | % | 03/02/15 | i | SW846-%Solid |
| Total Cyanide | 2.93 | 0.50 | mg/Kg | 03/04/15 | O/B/E | SW9010C/SW90 |
| Soil Extraction for PCB | Completed | | | 03/02/15 | CC/H | SW3545A |
| Soil Extraction for SVOA | Completed | | | 03/02/15 | CJ/VH | SW3545A |
| Mercury Digestion | Completed | | | 03/03/15 | I/I | SW7471B |

Project ID: 109 MARBLEDALE RD TUCKAHOE NY
Client ID: TB-8 20-22

Phoenix I.D.: BH78389

| Parameter | Result | RL/ PQL | Units | Date/Time | By | Reference |
|---|---|---|---|---|---|---|
| Total Metals Digest | Completed | | | 03/02/15 | CB/AG | SW3050B |
| **Polychlorinated Biphenyls** | | | | | | |
| PCB-1016 | ND | 71 | ug/Kg | 03/03/15 | AW | SW8082A |
| PCB-1221 | ND | 71 | ug/Kg | 03/03/15 | AW | SW8082A |
| PCB-1232 | ND | 71 | ug/Kg | 03/03/15 | AW | SW8082A |
| PCB-1242 | ND | 71 | ug/Kg | 03/03/15 | AW | SW8082A |
| PCB-1248 | ND | 71 | ug/Kg | 03/03/15 | AW | SW8082A |
| PCB-1254 | ND | 71 | ug/Kg | 03/03/15 | AW | SW8082A |
| PCB-1260 | ND | 71 | ug/Kg | 03/03/15 | AW | SW8082A |
| PCB-1262 | ND | 71 | ug/Kg | 03/03/15 | AW | SW8082A |
| PCB-1268 | ND | 71 | ug/Kg | 03/03/15 | AW | SW8082A |
| **QA/QC Surrogates** | | | | | | |
| % DCBP | 53 | | % | 03/03/15 | AW | 30 - 150 % |
| % TCMX | 59 | | % | 03/03/15 | AW | 30 - 150 % |
| **Volatiles (TCL)** | | | | | | |
| 1,1,1-Trichloroethane | ND | 4.3 | ug/kg | 03/03/15 | JLI | SW8260C |
| 1,1,2,2-Tetrachloroethane | ND | 4.3 | ug/kg | 03/03/15 | JLI | SW8260C |
| 1,1,2-Trichloroethane | ND | 4.3 | ug/kg | 03/03/15 | JLI | SW8260C |
| 1,1-Dichloroethane | ND | 4.3 | ug/kg | 03/03/15 | JLI | SW8260C |
| 1,1-Dichloroethene | ND | 4.3 | ug/kg | 03/03/15 | JLI | SW8260C |
| 1,2,3-Trichlorobenzene | ND | 4.3 | ug/kg | 03/03/15 | JLI | SW8260C |
| 1,2,4-Trichlorobenzene | ND | 4.3 | ug/kg | 03/03/15 | JLI | SW8260C |
| 1,2-Dibromo-3-chloropropane | ND | 4.3 | ug/kg | 03/03/15 | JLI | SW8260C |
| 1,2-Dibromoethane | ND | 4.3 | ug/kg | 03/03/15 | JLI | SW8260C |
| 1,2-Dichlorobenzene | ND | 4.3 | ug/kg | 03/03/15 | JLI | SW8260C |
| 1,2-Dichloroethane | ND | 4.3 | ug/kg | 03/03/15 | JLI | SW8260C |
| 1,2-Dichloropropane | ND | 4.3 | ug/kg | 03/03/15 | JLI | SW8260C |
| 1,3-Dichlorobenzene | ND | 4.3 | ug/kg | 03/03/15 | JLI | SW8260C |
| 1,4-Dichlorobenzene | ND | 4.3 | ug/kg | 03/03/15 | JLI | SW8260C |
| 2-Hexanone | ND | 22 | ug/kg | 03/03/15 | JLI | SW8260C |
| 4-Methyl-2-pentanone | ND | 22 | ug/kg | 03/03/15 | JLI | SW8260C |
| Acetone | ND | 43 | ug/kg | 03/03/15 | JLI | SW8260C |
| Benzene | ND | 4.3 | ug/kg | 03/03/15 | JLI | SW8260C |
| Bromochloromethane | ND | 4.3 | ug/kg | 03/03/15 | JLI | SW8260C |
| Bromodichloromethane | ND | 4.3 | ug/kg | 03/03/15 | JLI | SW8260C |
| Bromoform | ND | 4.3 | ug/kg | 03/03/15 | JLI | SW8260C |
| Bromomethane | ND | 4.3 | ug/kg | 03/03/15 | JLI | SW8260C |
| Carbon Disulfide | ND | 4.3 | ug/kg | 03/03/15 | JLI | SW8260C |
| Carbon tetrachloride | ND | 4.3 | ug/kg | 03/03/15 | JLI | SW8260C |
| Chlorobenzene | ND | 4.3 | ug/kg | 03/03/15 | JLI | SW8260C |
| Chloroethane | ND | 4.3 | ug/kg | 03/03/15 | JLI | SW8260C |
| Chloroform | ND | 4.3 | ug/kg | 03/03/15 | JLI | SW8260C |
| Chloromethane | ND | 4.3 | ug/kg | 03/03/15 | JLI | SW8260C |
| cis-1,2-Dichloroethene | ND | 4.3 | ug/kg | 03/03/15 | JLI | SW8260C |
| cis-1,3-Dichloropropene | ND | 4.3 | ug/kg | 03/03/15 | JLI | SW8260C |
| Cyclohexane | ND | 4.3 | ug/kg | 03/03/15 | JLI | SW8260C |
| Dibromochloromethane | ND | 4.3 | ug/kg | 03/03/15 | JLI | SW8260C |
| Dichlorodifluoromethane | ND | 4.3 | ug/kg | 03/03/15 | JLI | SW8260C |

Project ID: 109 MARBLEDALE RD TUCKAHOE NY
Client ID: TB-8 20-22

Phoenix I.D.: BH78389

| Parameter | Result | RL/ PQL | Units | Date/Time | By | Reference | |
|---|---|---|---|---|---|---|---|
| Ethylbenzene | ND | 4.3 | ug/kg | 03/03/15 | JLI | SW8260C | |
| Isopropylbenzene | ND | 4.3 | ug/kg | 03/03/15 | JLI | SW8260C | |
| m&p-Xylene | ND | 4.3 | ug/kg | 03/03/15 | JLI | SW8260C | |
| Methyl ethyl ketone | ND | 26 | ug/kg | 03/03/15 | JLI | SW8260C | |
| Methyl t-butyl ether (MTBE) | ND | 8.7 | ug/kg | 03/03/15 | JLI | SW8260C | |
| Methylacetate | ND | 3.5 | ug/kg | 03/03/15 | JLI | SW8260C | |
| Methylcyclohexane | ND | 4.3 | ug/kg | 03/03/15 | JLI | SW8260C | |
| Methylene chloride | ND | 4.3 | ug/kg | 03/03/15 | JLI | SW8260C | |
| o-Xylene | ND | 4.3 | ug/kg | 03/03/15 | JLI | SW8260C | |
| Styrene | ND | 4.3 | ug/kg | 03/03/15 | JLI | SW8260C | |
| Tetrachloroethene | ND | 4.3 | ug/kg | 03/03/15 | JLI | SW8260C | |
| Toluene | ND | 4.3 | ug/kg | 03/03/15 | JLI | SW8260C | |
| Total Xylenes | ND | 4.3 | ug/kg | 03/03/15 | JLI | SW8260C | |
| trans-1,2-Dichloroethene | ND | 4.3 | ug/kg | 03/03/15 | JLI | SW8260C | |
| trans-1,3-Dichloropropene | ND | 4.3 | ug/kg | 03/03/15 | JLI | SW8260C | |
| Trichloroethene | ND | 4.3 | ug/kg | 03/03/15 | JLI | SW8260C | |
| Trichlorofluoromethane | ND | 10 | ug/kg | 03/03/15 | JLI | SW8260C | |
| Trichlorotrifluoroethane | ND | 4.3 | ug/kg | 03/03/15 | JLI | SW8260C | |
| Vinyl chloride | ND | 4.3 | ug/kg | 03/03/15 | JLI | SW8260C | |
| **QA/QC Surrogates** | | | | | | | |
| % 1,2-dichlorobenzene-d4 | 100 | | % | 03/03/15 | JLI | 70 - 130 % | |
| % Bromofluorobenzene | 98 | | % | 03/03/15 | JLI | 70 - 130 % | |
| % Dibromofluoromethane | 100 | | % | 03/03/15 | JLI | 70 - 130 % | |
| % Toluene-d8 | 97 | | % | 03/03/15 | JLI | 70 - 130 % | |
| **1,4-dioxane** | | | | | | | |
| 1,4-dioxane | ND | 87 | ug/kg | 03/03/15 | JLI | SW8260C | |
| **Semivolatiles** | | | | | | | |
| 1,1-Biphenyl | ND | 260 | ug/Kg | 03/03/15 | DD | SW8270D | |
| 1,2,4,5-Tetrachlorobenzene | ND | 260 | ug/Kg | 03/03/15 | DD | SW8270D | |
| 2,3,4,6-tetrachlorophenol | ND | 260 | ug/Kg | 03/03/15 | DD | SW8270D | |
| 2,4,5-Trichlorophenol | ND | 260 | ug/Kg | 03/03/15 | DD | SW8270D | |
| 2,4,6-Trichlorophenol | ND | 260 | ug/Kg | 03/03/15 | DD | SW8270D | |
| 2,4-Dichlorophenol | ND | 260 | ug/Kg | 03/03/15 | DD | SW8270D | |
| 2,4-Dimethylphenol | ND | 260 | ug/Kg | 03/03/15 | DD | SW8270D | |
| 2,4-Dinitrophenol | ND | 580 | ug/Kg | 03/03/15 | DD | SW8270D | |
| 2,4-Dinitrotoluene | ND | 260 | ug/Kg | 03/03/15 | DD | SW8270D | |
| 2,6-Dinitrotoluene | ND | 260 | ug/Kg | 03/03/15 | DD | SW8270D | |
| 2-Chloronaphthalene | ND | 260 | ug/Kg | 03/03/15 | DD | SW8270D | |
| 2-Chlorophenol | ND | 260 | ug/Kg | 03/03/15 | DD | SW8270D | |
| 2-Methylnaphthalene | ND | 260 | ug/Kg | 03/03/15 | DD | SW8270D | |
| 2-Methylphenol (o-cresol) | ND | 260 | ug/Kg | 03/03/15 | DD | SW8270D | |
| 2-Nitroaniline | ND | 580 | ug/Kg | 03/03/15 | DD | SW8270D | |
| 2-Nitrophenol | ND | 260 | ug/Kg | 03/03/15 | DD | SW8270D | |
| 3&4-Methylphenol (m&p-cresol) | ND | 360 | ug/Kg | 03/03/15 | DD | SW8270D | 1 |
| 3,3'-Dichlorobenzidine | ND | 440 | ug/Kg | 03/03/15 | DD | SW8270D | |
| 3-Nitroaniline | ND | 580 | ug/Kg | 03/03/15 | DD | SW8270D | |
| 4,6-Dinitro-2-methylphenol | ND | 1100 | ug/Kg | 03/03/15 | DD | SW8270D | |
| 4-Bromophenyl phenyl ether | ND | 360 | ug/Kg | 03/03/15 | DD | SW8270D | |

Project ID: 109 MARBLEDALE RD TUCKAHOE NY
Client ID: TB-8 20-22

Phoenix I.D.: BH78389

| Parameter | Result | RL/ PQL | Units | Date/Time | By | Reference | |
|---|---|---|---|---|---|---|---|
| 4-Chloro-3-methylphenol | ND | 260 | ug/Kg | 03/03/15 | DD | SW8270D | |
| 4-Chloroaniline | ND | 260 | ug/Kg | 03/03/15 | DD | SW8270D | |
| 4-Chlorophenyl phenyl ether | ND | 260 | ug/Kg | 03/03/15 | DD | SW8270D | |
| 4-Nitroaniline | ND | 580 | ug/Kg | 03/03/15 | DD | SW8270D | |
| 4-Nitrophenol | ND | 1100 | ug/Kg | 03/03/15 | DD | SW8270D | |
| Acenaphthene | ND | 260 | ug/Kg | 03/03/15 | DD | SW8270D | |
| Acenaphthylene | ND | 260 | ug/Kg | 03/03/15 | DD | SW8270D | |
| Acetophenone | ND | 260 | ug/Kg | 03/03/15 | DD | SW8270D | |
| Anthracene | ND | 260 | ug/Kg | 03/03/15 | DD | SW8270D | |
| Atrazine | ND | 260 | ug/Kg | 03/03/15 | DD | SW8270D | |
| Benz(a)anthracene | ND | 260 | ug/Kg | 03/03/15 | DD | SW8270D | |
| Benzaldehyde | ND | 260 | ug/Kg | 03/03/15 | DD | SW8270D | |
| Benzo(a)pyrene | ND | 260 | ug/Kg | 03/03/15 | DD | SW8270D | |
| Benzo(b)fluoranthene | ND | 260 | ug/Kg | 03/03/15 | DD | SW8270D | |
| Benzo(ghi)perylene | ND | 260 | ug/Kg | 03/03/15 | DD | SW8270D | |
| Benzo(k)fluoranthene | ND | 260 | ug/Kg | 03/03/15 | DD | SW8270D | |
| Benzyl butyl phthalate | ND | 260 | ug/Kg | 03/03/15 | DD | SW8270D | |
| Bis(2-chloroethoxy)methane | ND | 260 | ug/Kg | 03/03/15 | DD | SW8270D | |
| Bis(2-chloroethyl)ether | ND | 360 | ug/Kg | 03/03/15 | DD | SW8270D | |
| Bis(2-chloroisopropyl)ether | ND | 260 | ug/Kg | 03/03/15 | DD | SW8270D | 1 |
| Bis(2-ethylhexyl)phthalate | 290 | 260 | ug/Kg | 03/03/15 | DD | SW8270D | |
| Caprolactam | ND | 260 | ug/Kg | 03/03/15 | DD | SW8270D | |
| Carbazole | ND | 1100 | ug/Kg | 03/03/15 | DD | SW8270D | |
| Chrysene | ND | 260 | ug/Kg | 03/03/15 | DD | SW8270D | |
| Dibenz(a,h)anthracene | ND | 260 | ug/Kg | 03/03/15 | DD | SW8270D | |
| Dibenzofuran | ND | 260 | ug/Kg | 03/03/15 | DD | SW8270D | |
| Diethyl phthalate | ND | 260 | ug/Kg | 03/03/15 | DD | SW8270D | |
| Dimethylphthalate | ND | 260 | ug/Kg | 03/03/15 | DD | SW8270D | |
| Di-n-butylphthalate | ND | 260 | ug/Kg | 03/03/15 | DD | SW8270D | |
| Di-n-octylphthalate | ND | 260 | ug/Kg | 03/03/15 | DD | SW8270D | |
| Fluoranthene | ND | 260 | ug/Kg | 03/03/15 | DD | SW8270D | |
| Fluorene | ND | 260 | ug/Kg | 03/03/15 | DD | SW8270D | |
| Hexachlorobenzene | ND | 260 | ug/Kg | 03/03/15 | DD | SW8270D | |
| Hexachlorobutadiene | ND | 260 | ug/Kg | 03/03/15 | DD | SW8270D | |
| Hexachlorocyclopentadiene | ND | 260 | ug/Kg | 03/03/15 | DD | SW8270D | |
| Hexachloroethane | ND | 260 | ug/Kg | 03/03/15 | DD | SW8270D | |
| Indeno(1,2,3-cd)pyrene | ND | 260 | ug/Kg | 03/03/15 | DD | SW8270D | |
| Isophorone | ND | 260 | ug/Kg | 03/03/15 | DD | SW8270D | |
| Naphthalene | ND | 260 | ug/Kg | 03/03/15 | DD | SW8270D | |
| Nitrobenzene | ND | 260 | ug/Kg | 03/03/15 | DD | SW8270D | |
| N-Nitrosodimethylamine | ND | 360 | ug/Kg | 03/03/15 | DD | SW8270D | |
| N-Nitrosodi-n-propylamine | ND | 260 | ug/Kg | 03/03/15 | DD | SW8270D | |
| N-Nitrosodiphenylamine | ND | 360 | ug/Kg | 03/03/15 | DD | SW8270D | |
| Pentachlorophenol | ND | 360 | ug/Kg | 03/03/15 | DD | SW8270D | |
| Phenanthrene | ND | 260 | ug/Kg | 03/03/15 | DD | SW8270D | |
| Phenol | ND | 260 | ug/Kg | 03/03/15 | DD | SW8270D | |
| Pyrene | ND | 260 | ug/Kg | 03/03/15 | DD | SW8270D | |
| **QA/QC Surrogates** | | | | | | | |
| % 2,4,6-Tribromophenol | 89 | | % | 03/03/15 | DD | 30 - 130 % | |

Project ID: 109 MARBLEDALE RD TUCKAHOE NY
Client ID: TB-8 20-22

Phoenix I.D.: BH78389

| Parameter | Result | RL/ PQL | Units | Date/Time | By | Reference |
|---|---|---|---|---|---|---|
| % 2-Fluorobiphenyl | 74 | | % | 03/03/15 | DD | 30 - 130 % |
| % 2-Fluorophenol | 61 | | % | 03/03/15 | DD | 30 - 130 % |
| % Nitrobenzene-d5 | 63 | | % | 03/03/15 | DD | 30 - 130 % |
| % Phenol-d5 | 68 | | % | 03/03/15 | DD | 30 - 130 % |
| % Terphenyl-d14 | 102 | | % | 03/03/15 | DD | 30 - 130 % |
| SVOA Library Search Top 15 | Completed | | | 03/03/15 | DD | |

1 = This parameter is not certified by NY NELAC for this matrix. NY NELAC does not offer certification for all parameters at this time.

**RL/PQL=Reporting/Practical Quantitation Level (Equivalent to NELAC LOQ, Limit of Quanitation) ND=Not Detected BRL=Below Reporting Level**

## Comments:

Please be advised that the NY 375 soil criteria for chromium are based on hexavalent chromium and trivalent chromium.

All soils, solids and sludges are reported on a dry weight basis unless otherwise noted in the sample comments.

If there are any questions regarding this data, please call Phoenix Client Services at extension 200.
This report must not be reproduced except in full as defined by the attached chain of custody.

**Phyllis Shiller, Laboratory Director**
**March 09, 2015**
**Reviewed and Released by: Phyllis Shiller, Laboratory Director**

1F
SEMIVOLATILE ORGANICS ANALYSIS DATA SHEET
TENTATIVELY IDENTIFIED COMPOUNDS

CLIENT ID

TB-12 4-6

Lab Name: Phoenix Environmental Labs  Client: HESNY-TUCK

Lab Code: Phoenix  Case No.:  SAS No.:  SDG No.: GBH78384

Matrix:(soil/water) SOIL  Lab Sample ID: BH78384

Sample wt/vol: 15.23 (g/mL) g  Lab File ID: 0303_21.D

Level: (low/med) Low  Date Received: 03/02/15

% Moisture: not dec. 18 decanted:(Y/N) NA  Date Extracted: 03/03/15

GPC Cleanup (Y/N): N  pH: NA  Date Analyzed: 3/3/2015

Conc. Extract Volume: 1000 (uL)  Dilution Factor 2

Injection Volume: 2 (uL)

Number TICs found: 15  CONCENTRATION UNITS: (ug/L or ug/KG) ug/Kg

| CAS NUMBER | COMPOUND NAME | RT | EST. CONC. | Q |
|---|---|---|---|---|
| | Unknown | 5.481 | 5600 | JN |
| 000629-50-5 | Tridecane | 6.781 | 7600 | JN |
| 002039-89-6 | Benzene, 2-ethenyl-1,4-dimethyl- | 7.439 | 3200 | JN |
| | Unknown | 7.939 | 4200 | JN |
| | Unknown | 8.986 | 6500 | JN |
| 061142-20-9 | Cyclohexane, (4-methylpentyl)- | 9.463 | 3300 | JN |
| 000629-59-4 | Tetradecane | 9.939 | 11000 | JN |
| 031081-17-1 | Nonane, 2-methyl-5-propyl- | 10.469 | 3800 | JN |
| 024251-86-3 | Dodecane, 5,8-diethyl- | 12.004 | 3500 | JN |
| 000629-78-7 | Heptadecane | 12.427 | 8100 | JN |
| 000629-97-0 | Docosane | 13.163 | 5400 | JN |
| | Unknown | 13.863 | 4700 | JN |
| | Unknown | 14.021 | 3800 | JN |
| 000112-95-8 | Eicosane | 14.527 | 4300 | JN |
| | Unknown | 15.774 | 3300 | JN |

1F
SEMIVOLATILE ORGANICS ANALYSIS DATA SHEET
TENTATIVELY IDENTIFIED COMPOUNDS

CLIENT ID

TB-12 28-30

Lab Name: Phoenix Environmental Labs  Client: HESNY-TUCK

Lab Code: Phoenix  Case No.:  SAS No.:  SDG No.: GBH78384

Matrix:(soil/water) SOIL  Lab Sample ID: BH78385

Sample wt/vol: 15.44 (g/mL) g  Lab File ID: 0302_17.D

Level: (low/med) Low  Date Received: 03/02/15

% Moisture: not dec. 16 decanted:(Y/N) NA  Date Extracted: 03/02/15

GPC Cleanup (Y/N): N  pH: NA  Date Analyzed: 3/2/2015

Conc. Extract Volume: 1000 (uL)  Dilution Factor 1

Injection Volume: 2 (uL)

Number TICs found: 15  CONCENTRATION UNITS: (ug/L or ug/KG) ug/Kg

| CAS NUMBER | COMPOUND NAME | RT | EST. CONC. | Q |
|---|---|---|---|---|
| | Unknown | 3.775 | 1700 | JN |
| | Unknown | 14.380 | 370 | JN |
| | Unknown | 14.415 | 570 | JN |
| 000629-97-0 | Docosane | 15.933 | 340 | JN |
| 007225-66-3 | Tridecane, 7-hexyl- | 16.521 | 420 | JN |
| 000112-95-8 | Eicosane | 17.086 | 740 | JN |
| 000630-03-5 | Nonacosane | 17.621 | 590 | JN |
| 013475-75-7 | Pentadecane, 8-hexyl- | 18.156 | 520 | JN |
| 055124-79-3 | Heptadecane, 9-hexyl- | 18.709 | 790 | JN |
| 007225-64-1 | Heptadecane, 9-octyl- | 19.145 | 510 | JN |
| 007098-22-8 | Tetratetracontane | 19.515 | 680 | JN |
| 000192-97-2 | Benzo[e]pyrene | 19.592 | 460 | JN |
| 055282-14-9 | Docosane, 9-butyl- | 19.844 | 480 | JN |
| 000629-94-7 | Heneicosane | 20.197 | 520 | JN |
| | Unknown | 20.662 | 330 | JN |

1F
SEMIVOLATILE ORGANICS ANALYSIS DATA SHEET
TENTATIVELY IDENTIFIED COMPOUNDS

CLIENT ID

TB-11 4-6

Lab Name: Phoenix Environmental Labs

Client: HESNY-TUCK

Lab Code: Phoenix

Case No.:

SAS No.:

SDG No.: GBH78384

Matrix:(soil/water) SOIL

Lab Sample ID: BH78386

Sample wt/vol: 15.24 (g/mL) g

Lab File ID: 0303_22.D

Level: (low/med) Low

Date Received: 03/02/15

% Moisture: not dec. 12 decanted:(Y/N) NA

Date Extracted: 03/03/15

GPC Cleanup (Y/N): N pH: NA

Date Analyzed: 3/3/2015

Conc. Extract Volume: 1000 (uL)

Dilution Factor 10

Injection Volume: 2 (uL)

Number TICs found: 0

CONCENTRATION UNITS:
(ug/L or ug/KG) ug/Kg

| CAS NUMBER | COMPOUND NAME | RT | EST. CONC. | Q |
|---|---|---|---|---|
| | | | | |

FORM I SEMIVOA-TIC

1F
SEMIVOLATILE ORGANICS ANALYSIS DATA SHEET
TENTATIVELY IDENTIFIED COMPOUNDS

CLIENT ID

TB-11 21-23

Lab Name: Phoenix Environmental Labs

Client: HESNY-TUCK

Lab Code: Phoenix

Case No.:

SAS No.:

SDG No.: GBH78384

Matrix:(soil/water) SOIL

Lab Sample ID: BH78387

Sample wt/vol: 15.12 (g/mL) g

Lab File ID: 0303_23.D

Level: (low/med) Low

Date Received: 03/02/15

% Moisture: not dec. 15 decanted:(Y/N) NA

Date Extracted: 03/03/15

GPC Cleanup (Y/N): N pH: NA

Date Analyzed: 3/3/2015

Conc. Extract Volume: 1000 (uL)

Dilution Factor 10

Injection Volume: 2 (uL)

Number TICs found: 0

CONCENTRATION UNITS:
(ug/L or ug/KG) ug/Kg

| CAS NUMBER | COMPOUND NAME | RT | EST. CONC. | Q |
|---|---|---|---|---|
| | | | | |

FORM I SEMIVOA-TIC

1F
SEMIVOLATILE ORGANICS ANALYSIS DATA SHEET
TENTATIVELY IDENTIFIED COMPOUNDS

CLIENT ID

TB-8 2-4

Lab Name: Phoenix Environmental Labs

Client: HESNY-TUCK

Lab Code: Phoenix

Case No.:

SAS No.:

SDG No.: GBH78384

Matrix:(soil/water) SOIL

Lab Sample ID: BH78388

Sample wt/vol: 15.02 (g/mL) g

Lab File ID: 0302_18.D

Level: (low/med) Low

Date Received: 03/02/15

% Moisture: not dec. 10 decanted:(Y/N) NA

Date Extracted: 03/03/15

GPC Cleanup (Y/N): N pH: NA

Date Analyzed: 3/3/2015

Conc. Extract Volume: 1000 (uL)

Dilution Factor 1

Injection Volume: 2 (uL)

Number TICs found: 2

CONCENTRATION UNITS:
(ug/L or ug/KG) ug/Kg

| CAS NUMBER | COMPOUND NAME | RT | EST. CONC. | Q |
|---|---|---|---|---|
| 000123-42-2 | 2-Pentanone, 4-hydroxy-4-methyl- | 3.769 | 1300 | JNA |
| | Unknown | 19.086 | 300 | JN |

FORM I SEMIVOA-TIC

1F
SEMIVOLATILE ORGANICS ANALYSIS DATA SHEET
TENTATIVELY IDENTIFIED COMPOUNDS

CLIENT ID

TB-8 20-22

Lab Name: Phoenix Environmental Labs

Client: HESNY-TUCK

Lab Code: Phoenix

Case No.:

SAS No.:

SDG No.: GBH78384

Matrix:(soil/water) SOIL

Lab Sample ID: BH78389

Sample wt/vol: 15.08 (g/mL) g

Lab File ID: 0302_20.D

Level: (low/med) Low

Date Received: 03/02/15

% Moisture: not dec. 9 decanted:(Y/N) NA

Date Extracted: 03/03/15

GPC Cleanup (Y/N): N pH: NA

Date Analyzed: 3/3/2015

Conc. Extract Volume: 1000 (uL)

Dilution Factor 1

Injection Volume: 2 (uL)

Number TICs found: 2

CONCENTRATION UNITS:
(ug/L or ug/KG) ug/Kg

| CAS NUMBER | COMPOUND NAME | RT | EST. CONC. | Q |
|---|---|---|---|---|
| 000123-42-2 | 2-Pentanone, 4-hydroxy-4-methyl- | 3.769 | 910 | JNA |
| | Unknown | 19.086 | 540 | JN |

FORM I SEMIVOA-TIC

PHOENIX

Environmental Laboratories, Inc.
587 East Middle Turnpike, P.O.Box 370, Manchester, CT 06045
Tel. (860) 645-1102 Fax (860) 645-0823

ACCREDITED IN ACCORDANCE WITH nelac
NY # 11301

# QA/QC Report

March 09, 2015

## QA/QC Data

SDG I.D.: GBH78384

| Parameter | Blank | Sample Result | Dup Result | Dup RPD | LCS % | LCSD % | LCS RPD | MS % | MSD % | MS RPD | % Rec Limits | % RPD Limits | |
|---|---|---|---|---|---|---|---|---|---|---|---|---|---|
| QA/QC Batch 300603, QC Sample No: BH78166 (BH78384, BH78385, BH78386, BH78387, BH78388, BH78389) | | | | | | | | | | | | | |
| Mercury - Soil | BRL | <0.03 | <0.03 | NC | 97.0 | 101 | 4.0 | 105 | 98.8 | 6.1 | 70 - 130 | 30 | |
| **Comment:** | | | | | | | | | | | | | |
| Additional Mercury criteria: LCS acceptance range for waters is 80-120% and for soils is 70-130%. | | | | | | | | | | | | | |
| QA/QC Batch 300557, QC Sample No: BH78307 (BH78384, BH78385, BH78386, BH78387, BH78388, BH78389) | | | | | | | | | | | | | |
| **ICP Metals - Soil** | | | | | | | | | | | | | |
| Aluminum | BRL | 5790 | 6480 | 11.2 | 103 | 99.1 | 3.9 | NC | NC | NC | 75 - 125 | 30 | |
| Antimony | BRL | <1.8 | <3.6 | NC | 105 | 110 | 4.7 | 88.6 | 90.4 | 2.0 | 75 - 125 | 30 | |
| Arsenic | BRL | 1.3 | 1.47 | NC | 99.2 | 97.0 | 2.2 | 92.0 | 94.5 | 2.7 | 75 - 125 | 30 | |
| Barium | BRL | 62.5 | 49.3 | 23.6 | 111 | 112 | 0.9 | 91.1 | 94.3 | 3.5 | 75 - 125 | 30 | |
| Beryllium | BRL | 0.31 | 0.33 | NC | 103 | 101 | 2.0 | 96.6 | 94.6 | 2.1 | 75 - 125 | 30 | |
| Cadmium | BRL | <0.36 | <0.36 | NC | 88.6 | 89.6 | 1.1 | 92.6 | 95.9 | 3.5 | 75 - 125 | 30 | |
| Calcium | BRL | 310 | 385 | 21.6 | 103 | 102 | 1.0 | >130 | >130 | NC | 75 - 125 | 30 | m |
| Chromium | BRL | 12.2 | 13.3 | 8.60 | 103 | 106 | 2.9 | 103 | 104 | 1.0 | 75 - 125 | 30 | |
| Cobalt | BRL | 5.19 | 6.00 | 14.5 | 88.1 | 89.9 | 2.0 | 96.4 | 99.4 | 3.1 | 75 - 125 | 30 | |
| Copper | BRL | 10.7 | 11.4 | 6.30 | 95.1 | 94.8 | 0.3 | 104 | 107 | 2.8 | 75 - 125 | 30 | |
| Iron | BRL | 13500 | 16000 | 16.9 | 87.9 | 90.3 | 2.7 | NC | NC | NC | 75 - 125 | 30 | |
| Lead | BRL | 4.6 | 4.32 | 6.30 | 91.5 | 93.9 | 2.6 | 93.6 | 96.8 | 3.4 | 75 - 125 | 30 | |
| Magnesium | BRL | 1310 | 1530 | 15.5 | 103 | 102 | 1.0 | NC | NC | NC | 75 - 125 | 30 | |
| Manganese | BRL | 503 | 462 | 8.50 | 111 | 110 | 0.9 | 105 | 65.4 | 46.5 | 75 - 125 | 30 | m,r |
| Nickel | BRL | 8.91 | 9.24 | 3.60 | 101 | 102 | 1.0 | 96.1 | 99.4 | 3.4 | 75 - 125 | 30 | |
| Potassium | BRL | 686 | 653 | 4.90 | 96.4 | 90.9 | 5.9 | >130 | >130 | NC | 75 - 125 | 30 | m |
| Selenium | BRL | <1.4 | <1.4 | NC | 87.8 | 89.2 | 1.6 | 79.3 | 82.1 | 3.5 | 75 - 125 | 30 | |
| Silver | BRL | <0.36 | <0.36 | NC | 102 | 103 | 1.0 | 96.9 | 100 | 3.1 | 75 - 125 | 30 | |
| Sodium | BRL | 414 | 459 | 10.3 | 109 | 103 | 5.7 | >130 | >130 | NC | 75 - 125 | 30 | m |
| Thallium | BRL | <1.4 | <3.2 | NC | 100 | 101 | 1.0 | 94.8 | 98.0 | 3.3 | 75 - 125 | 30 | |
| Vanadium | BRL | 20.2 | 22.7 | 11.7 | 110 | 115 | 4.4 | 104 | 105 | 1.0 | 75 - 125 | 30 | |
| Zinc | BRL | 19.2 | 21.1 | 9.40 | 91.8 | 91.7 | 0.1 | 95.6 | 98.4 | 2.9 | 75 - 125 | 30 | |

m = This parameter is outside laboratory ms/msd specified recovery limits.
r = This parameter is outside laboratory rpd specified recovery limits.

PHOENIX

Environmental Laboratories, Inc.
587 East Middle Turnpike, P.O.Box 370, Manchester, CT 06045
Tel. (860) 645-1102 Fax (860) 645-0823

ACCREDITED IN ACCORDANCE WITH nelac
NY # 11301

# QA/QC Report

March 09, 2015

## QA/QC Data

SDG I.D.: GBH78384

| Parameter | Blank | Sample Result | Dup Result | Dup RPD | LCS % | LCSD % | LCS RPD | MS % | MSD % | MS RPD | % Rec Limits | % RPD Limits |
|---|---|---|---|---|---|---|---|---|---|---|---|---|
| QA/QC Batch 300565, QC Sample No: BH78151 (BH78384, BH78385, BH78386) | | | | | | | | | | | | |
| Total Cyanide | BRL | <0.58 | <0.53 | NC | 96.7 | | | 90.0 | | | 85 - 115 | 30 |
| QA/QC Batch 300799, QC Sample No: BH78389 (BH78387, BH78388, BH78389) | | | | | | | | | | | | |
| Total Cyanide | BRL | 2.93 | 3.36 | 13.7 | 103 | | | 101 | | | 85 - 115 | 30 |

PHOENIX

Environmental Laboratories, Inc.
587 East Middle Turnpike, P.O.Box 370, Manchester, CT 06045
Tel. (860) 645-1102 Fax (860) 645-0823

ACCREDITED IN ACCORDANCE WITH nelac NY # 11301

# QA/QC Report

March 09, 2015

## QA/QC Data

SDG I.D.: GBH78384

QA/QC Batch 300444, QC Sample No: BH77859 (BH78384, BH78385, BH78386, BH78387, BH78388, BH78389)

### Semivolatiles - Solid

| Parameter | Blank | LCS % | LCSD % | LCS RPD | MS % | MSD % | MS RPD | % Rec Limits | % RPD Limits | |
|---|---|---|---|---|---|---|---|---|---|---|
| 1,1-Biphenyl | ND | 76 | 79 | 3.9 | 84 | 83 | 1.2 | 30 - 130 | 30 | |
| 1,2,4,5-Tetrachlorobenzene | ND | 77 | 82 | 6.3 | 84 | 86 | 2.4 | 30 - 130 | 30 | |
| 2,3,4,6-tetrachlorophenol | ND | 94 | 98 | 4.2 | 104 | 104 | 0.0 | 30 - 130 | 30 | |
| 2,4,5-Trichlorophenol | ND | 88 | 92 | 4.4 | 98 | 98 | 0.0 | 30 - 130 | 30 | |
| 2,4,6-Trichlorophenol | ND | 87 | 91 | 4.5 | 94 | 94 | 0.0 | 30 - 130 | 30 | |
| 2,4-Dichlorophenol | ND | 82 | 88 | 7.1 | 89 | 91 | 2.2 | 30 - 130 | 30 | |
| 2,4-Dimethylphenol | ND | 78 | 80 | 2.5 | 81 | 77 | 5.1 | 30 - 130 | 30 | |
| 2,4-Dinitrophenol | ND | 26 | 31 | 17.5 | 18 | 21 | 15.4 | 30 - 130 | 30 | l,m |
| 2,4-Dinitrotoluene | ND | 88 | 90 | 2.2 | 94 | 94 | 0.0 | 30 - 130 | 30 | |
| 2,6-Dinitrotoluene | ND | 86 | 90 | 4.5 | 94 | 94 | 0.0 | 30 - 130 | 30 | |
| 2-Chloronaphthalene | ND | 77 | 81 | 5.1 | 85 | 85 | 0.0 | 30 - 130 | 30 | |
| 2-Chlorophenol | ND | 75 | 81 | 7.7 | 83 | 84 | 1.2 | 30 - 130 | 30 | |
| 2-Methylnaphthalene | ND | 80 | 85 | 6.1 | 87 | 89 | 2.3 | 30 - 130 | 30 | |
| 2-Methylphenol (o-cresol) | ND | 74 | 79 | 6.5 | 79 | 80 | 1.3 | 30 - 130 | 30 | |
| 2-Nitroaniline | ND | 89 | 95 | 6.5 | 86 | 91 | 5.6 | 30 - 130 | 30 | |
| 2-Nitrophenol | ND | 79 | 84 | 6.1 | 88 | 90 | 2.2 | 30 - 130 | 30 | |
| 3&4-Methylphenol (m&p-cresol) | ND | 82 | 87 | 5.9 | 86 | 88 | 2.3 | 30 - 130 | 30 | |
| 3,3'-Dichlorobenzidine | ND | 76 | 82 | 7.6 | 77 | 78 | 1.3 | 30 - 130 | 30 | |
| 3-Nitroaniline | ND | 85 | 89 | 4.6 | 87 | 92 | 5.6 | 30 - 130 | 30 | |
| 4,6-Dinitro-2-methylphenol | ND | 49 | 57 | 15.1 | 75 | 78 | 3.9 | 30 - 130 | 30 | |
| 4-Bromophenyl phenyl ether | ND | 81 | 85 | 4.8 | 92 | 90 | 2.2 | 30 - 130 | 30 | |
| 4-Chloro-3-methylphenol | ND | 88 | 93 | 5.5 | 94 | 96 | 2.1 | 30 - 130 | 30 | |
| 4-Chloroaniline | ND | 74 | 77 | 4.0 | 76 | 77 | 1.3 | 30 - 130 | 30 | |
| 4-Chlorophenyl phenyl ether | ND | 81 | 84 | 3.6 | 88 | 87 | 1.1 | 30 - 130 | 30 | |
| 4-Nitroaniline | ND | 85 | 90 | 5.7 | 92 | 93 | 1.1 | 30 - 130 | 30 | |
| 4-Nitrophenol | ND | 93 | 100 | 7.3 | 97 | 98 | 1.0 | 30 - 130 | 30 | |
| Acenaphthene | ND | 84 | 88 | 4.7 | 91 | 90 | 1.1 | 30 - 130 | 30 | |
| Acenaphthylene | ND | 78 | 81 | 3.8 | 85 | 84 | 1.2 | 30 - 130 | 30 | |
| Acetophenone | ND | 78 | 83 | 6.2 | 84 | 86 | 2.4 | 30 - 130 | 30 | |
| Anthracene | ND | 81 | 87 | 7.1 | 91 | 89 | 2.2 | 30 - 130 | 30 | |
| Atrazine | ND | 80 | 82 | 2.5 | 91 | 82 | 10.4 | 30 - 130 | 30 | |
| Benz(a)anthracene | ND | 84 | 89 | 5.8 | 90 | 90 | 0.0 | 30 - 130 | 30 | |
| Benzaldehyde | ND | 53 | 63 | 17.2 | 125 | 141 | 12.0 | 30 - 130 | 30 | m |
| Benzo(a)pyrene | ND | 81 | 86 | 6.0 | 89 | 89 | 0.0 | 30 - 130 | 30 | |
| Benzo(b)fluoranthene | ND | 78 | 82 | 5.0 | 88 | 85 | 3.5 | 30 - 130 | 30 | |
| Benzo(ghi)perylene | ND | 90 | 96 | 6.5 | 101 | 99 | 2.0 | 30 - 130 | 30 | |
| Benzo(k)fluoranthene | ND | 81 | 87 | 7.1 | 88 | 89 | 1.1 | 30 - 130 | 30 | |
| Benzyl butyl phthalate | ND | 85 | 88 | 3.5 | 97 | 92 | 5.3 | 30 - 130 | 30 | |
| Bis(2-chloroethoxy)methane | ND | 80 | 83 | 3.7 | 86 | 86 | 0.0 | 30 - 130 | 30 | |
| Bis(2-chloroethyl)ether | ND | 64 | 68 | 6.1 | 68 | 71 | 4.3 | 30 - 130 | 30 | |
| Bis(2-chloroisopropyl)ether | ND | 66 | 70 | 5.9 | 72 | 73 | 1.4 | 30 - 130 | 30 | |

# QA/QC Data

SDG I.D.: GBH78384

| Parameter | Blank | LCS % | LCSD % | LCS RPD | MS % | MSD % | MS RPD | % Rec Limits | % RPD Limits |
|---|---|---|---|---|---|---|---|---|---|
| Bis(2-ethylhexyl)phthalate | ND | 85 | 88 | 3.5 | 96 | 91 | 5.3 | 30 - 130 | 30 |
| Caprolactam | ND | 78 | 80 | 2.5 | 87 | 87 | 0.0 | 30 - 130 | 30 |
| Carbazole | ND | 84 | 89 | 5.8 | 92 | 87 | 5.6 | 30 - 130 | 30 |
| Chrysene | ND | 88 | 93 | 5.5 | 95 | 96 | 1.0 | 30 - 130 | 30 |
| Dibenz(a,h)anthracene | ND | 89 | 95 | 6.5 | 101 | 98 | 3.0 | 30 - 130 | 30 |
| Dibenzofuran | ND | 83 | 88 | 5.8 | 90 | 90 | 0.0 | 30 - 130 | 30 |
| Diethyl phthalate | ND | 85 | 85 | 0.0 | 91 | 89 | 2.2 | 30 - 130 | 30 |
| Dimethylphthalate | ND | 83 | 85 | 2.4 | 91 | 89 | 2.2 | 30 - 130 | 30 |
| Di-n-butylphthalate | ND | 77 | 80 | 3.8 | 88 | 80 | 9.5 | 30 - 130 | 30 |
| Di-n-octylphthalate | ND | 90 | 95 | 5.4 | 97 | 97 | 0.0 | 30 - 130 | 30 |
| Fluoranthene | ND | 79 | 85 | 7.3 | 90 | 86 | 4.5 | 30 - 130 | 30 |
| Fluorene | ND | 82 | 85 | 3.6 | 89 | 88 | 1.1 | 30 - 130 | 30 |
| Hexachlorobenzene | ND | 79 | 82 | 3.7 | 90 | 84 | 6.9 | 30 - 130 | 30 |
| Hexachlorobutadiene | ND | 74 | 77 | 4.0 | 82 | 82 | 0.0 | 30 - 130 | 30 |
| Hexachlorocyclopentadiene | ND | 90 | 100 | 10.5 | 91 | 102 | 11.4 | 30 - 130 | 30 |
| Hexachloroethane | ND | 66 | 71 | 7.3 | 72 | 73 | 1.4 | 30 - 130 | 30 |
| Indeno(1,2,3-cd)pyrene | ND | 89 | 96 | 7.6 | 101 | 99 | 2.0 | 30 - 130 | 30 |
| Isophorone | ND | 75 | 77 | 2.6 | 81 | 80 | 1.2 | 30 - 130 | 30 |
| Naphthalene | ND | 74 | 80 | 7.8 | 81 | 83 | 2.4 | 30 - 130 | 30 |
| Nitrobenzene | ND | 73 | 79 | 7.9 | 79 | 82 | 3.7 | 30 - 130 | 30 |
| N-Nitrosodimethylamine | ND | 58 | 62 | 6.7 | 63 | 63 | 0.0 | 30 - 130 | 30 |
| N-Nitrosodi-n-propylamine | ND | 76 | 80 | 5.1 | 82 | 83 | 1.2 | 30 - 130 | 30 |
| N-Nitrosodiphenylamine | ND | 85 | 87 | 2.3 | 89 | 91 | 2.2 | 30 - 130 | 30 |
| Pentachlorophenol | ND | 104 | 114 | 9.2 | 127 | 124 | 2.4 | 30 - 130 | 30 |
| Phenanthrene | ND | 82 | 86 | 4.8 | 91 | 88 | 3.4 | 30 - 130 | 30 |
| Phenol | ND | 71 | 77 | 8.1 | 77 | 79 | 2.6 | 30 - 130 | 30 |
| Pyrene | ND | 79 | 83 | 4.9 | 90 | 85 | 5.7 | 30 - 130 | 30 |
| % 2,4,6-Tribromophenol | 100 | 83 | 88 | 5.8 | 92 | 91 | 1.1 | 30 - 130 | 30 |
| % 2-Fluorobiphenyl | 77 | 75 | 79 | 5.2 | 83 | 83 | 0.0 | 30 - 130 | 30 |
| % 2-Fluorophenol | 64 | 70 | 75 | 6.9 | 76 | 77 | 1.3 | 30 - 130 | 30 |
| % Nitrobenzene-d5 | 67 | 71 | 78 | 9.4 | 77 | 80 | 3.8 | 30 - 130 | 30 |
| % Phenol-d5 | 70 | 73 | 79 | 7.9 | 79 | 81 | 2.5 | 30 - 130 | 30 |
| % Terphenyl-d14 | 88 | 84 | 90 | 6.9 | 98 | 93 | 5.2 | 30 - 130 | 30 |

**Comment:**

Additional 8270 criteria: 20% of compounds can be outside of acceptance criteria as long as recovery is at least 10%. (Acid surrogates acceptance range for aqueous samples: 15-110%, for soils 30-130%)

QA/QC Batch 300456, QC Sample No: BH78084 (BH78384, BH78385, BH78386, BH78387, BH78388, BH78389)

## Polychlorinated Biphenyls - Solid

| | | | | | | | | | |
|---|---|---|---|---|---|---|---|---|---|
| PCB-1016 | ND | 95 | 95 | 0.0 | 92 | 89 | 3.3 | 40 - 140 | 30 |
| PCB-1221 | ND | | | | | | | 40 - 140 | 30 |
| PCB-1232 | ND | | | | | | | 40 - 140 | 30 |
| PCB-1242 | ND | | | | | | | 40 - 140 | 30 |
| PCB-1248 | ND | | | | | | | 40 - 140 | 30 |
| PCB-1254 | ND | | | | | | | 40 - 140 | 30 |
| PCB-1260 | ND | 99 | 99 | 0.0 | 96 | 95 | 1.0 | 40 - 140 | 30 |
| PCB-1262 | ND | | | | | | | 40 - 140 | 30 |
| PCB-1268 | ND | | | | | | | 40 - 140 | 30 |
| % DCBP (Surrogate Rec) | 83 | 103 | 102 | 1.0 | 99 | 97 | 2.0 | 30 - 150 | 30 |
| % TCMX (Surrogate Rec) | 69 | 102 | 102 | 0.0 | 94 | 92 | 2.2 | 30 - 150 | 30 |

QA/QC Batch 300701, QC Sample No: BH78389 (BH78385, BH78386, BH78387, BH78388 (1X, 38X) , BH78389)

## Volatiles (TCL) - Solid

| | | | | | | | | | |
|---|---|---|---|---|---|---|---|---|---|
| 1,1,1-Trichloroethane | ND | 119 | 123 | 3.3 | 115 | 114 | 0.9 | 70 - 130 | 30 |

# QA/QC Data

SDG I.D.: GBH78384

| Parameter | Blank | LCS % | LCSD % | LCS RPD | MS % | MSD % | MS RPD | % Rec Limits | % RPD Limits | |
|---|---|---|---|---|---|---|---|---|---|---|
| 1,1,2,2-Tetrachloroethane | ND | 121 | 122 | 0.8 | 95 | 104 | 9.0 | 70 - 130 | 30 | |
| 1,1,2-Trichloroethane | ND | 116 | 117 | 0.9 | 106 | 110 | 3.7 | 70 - 130 | 30 | |
| 1,1-Dichloroethane | ND | 120 | 121 | 0.8 | 116 | 116 | 0.0 | 70 - 130 | 30 | |
| 1,1-Dichloroethene | ND | 125 | 123 | 1.6 | 119 | 114 | 4.3 | 70 - 130 | 30 | |
| 1,2,3-Trichlorobenzene | ND | 107 | 108 | 0.9 | 85 | 91 | 6.8 | 70 - 130 | 30 | |
| 1,2,4-Trichlorobenzene | ND | 105 | 106 | 0.9 | 82 | 88 | 7.1 | 70 - 130 | 30 | |
| 1,2-Dibromo-3-chloropropane | ND | 116 | 117 | 0.9 | 91 | 106 | 15.2 | 70 - 130 | 30 | |
| 1,2-Dibromoethane | ND | 118 | 120 | 1.7 | 107 | 111 | 3.7 | 70 - 130 | 30 | |
| 1,2-Dichlorobenzene | ND | 107 | 109 | 1.9 | 96 | 99 | 3.1 | 70 - 130 | 30 | |
| 1,2-Dichloroethane | ND | 115 | 117 | 1.7 | 105 | 109 | 3.7 | 70 - 130 | 30 | |
| 1,2-Dichloropropane | ND | 121 | 122 | 0.8 | 117 | 117 | 0.0 | 70 - 130 | 30 | |
| 1,3-Dichlorobenzene | ND | 107 | 110 | 2.8 | 98 | 100 | 2.0 | 70 - 130 | 30 | |
| 1,4-Dichlorobenzene | ND | 113 | 114 | 0.9 | 102 | 104 | 1.9 | 70 - 130 | 30 | |
| 1,4-dioxane | ND | 108 | 116 | 7.1 | 141 | 113 | 22.0 | 70 - 130 | 30 | m |
| 2-Hexanone | ND | 105 | 106 | 0.9 | 94 | 102 | 8.2 | 70 - 130 | 30 | |
| 4-Methyl-2-pentanone | ND | 113 | 117 | 3.5 | 100 | 112 | 11.3 | 70 - 130 | 30 | |
| Acetone | ND | 108 | 104 | 3.8 | 77 | 88 | 13.3 | 70 - 130 | 30 | |
| Benzene | ND | 119 | 120 | 0.8 | 116 | 114 | 1.7 | 70 - 130 | 30 | |
| Bromochloromethane | ND | 122 | 120 | 1.7 | 109 | 112 | 2.7 | 70 - 130 | 30 | |
| Bromodichloromethane | ND | 124 | 125 | 0.8 | 111 | 113 | 1.8 | 70 - 130 | 30 | |
| Bromoform | ND | 115 | 116 | 0.9 | 94 | 101 | 7.2 | 70 - 130 | 30 | |
| Bromomethane | ND | 111 | 114 | 2.7 | 117 | 118 | 0.9 | 70 - 130 | 30 | |
| Carbon Disulfide | ND | 145 | 147 | 1.4 | 123 | 119 | 3.3 | 70 - 130 | 30 | l |
| Carbon tetrachloride | ND | 118 | 121 | 2.5 | 111 | 111 | 0.0 | 70 - 130 | 30 | |
| Chlorobenzene | ND | 114 | 115 | 0.9 | 105 | 105 | 0.0 | 70 - 130 | 30 | |
| Chloroethane | ND | 107 | 107 | 0.0 | 116 | 112 | 3.5 | 70 - 130 | 30 | |
| Chloroform | ND | 119 | 120 | 0.8 | 114 | 114 | 0.0 | 70 - 130 | 30 | |
| Chloromethane | ND | 117 | 120 | 2.5 | 124 | 122 | 1.6 | 70 - 130 | 30 | |
| cis-1,2-Dichloroethene | ND | 122 | 122 | 0.0 | 116 | 116 | 0.0 | 70 - 130 | 30 | |
| cis-1,3-Dichloropropene | ND | 127 | 129 | 1.6 | 113 | 116 | 2.6 | 70 - 130 | 30 | |
| Cyclohexane | ND | 109 | 110 | 0.9 | 121 | 118 | 2.5 | 70 - 130 | 30 | |
| Dibromochloromethane | ND | 117 | 120 | 2.5 | 100 | 104 | 3.9 | 70 - 130 | 30 | |
| Dichlorodifluoromethane | ND | 120 | 118 | 1.7 | 129 | 124 | 4.0 | 70 - 130 | 30 | |
| Ethylbenzene | ND | 116 | 116 | 0.0 | 110 | 109 | 0.9 | 70 - 130 | 30 | |
| Isopropylbenzene | ND | 107 | 110 | 2.8 | 108 | 108 | 0.0 | 70 - 130 | 30 | |
| m&p-Xylene | ND | 114 | 113 | 0.9 | 109 | 107 | 1.9 | 70 - 130 | 30 | |
| Methyl ethyl ketone | ND | 105 | 109 | 3.7 | 93 | 98 | 5.2 | 70 - 130 | 30 | |
| Methyl t-butyl ether (MTBE) | ND | 114 | 117 | 2.6 | 102 | 107 | 4.8 | 70 - 130 | 30 | |
| Methylacetate | ND | 117 | 119 | 1.7 | 102 | 111 | 8.5 | 70 - 130 | 30 | |
| Methylcyclohexane | ND | 107 | 108 | 0.9 | 114 | 111 | 2.7 | 70 - 130 | 30 | |
| Methylene chloride | ND | 116 | 116 | 0.0 | 83 | 104 | 22.5 | 70 - 130 | 30 | |
| o-Xylene | ND | 116 | 116 | 0.0 | 110 | 111 | 0.9 | 70 - 130 | 30 | |
| Styrene | ND | 114 | 116 | 1.7 | 107 | 108 | 0.9 | 70 - 130 | 30 | |
| Tetrachloroethene | ND | 112 | 113 | 0.9 | 105 | 105 | 0.0 | 70 - 130 | 30 | |
| Toluene | ND | 118 | 119 | 0.8 | 114 | 114 | 0.0 | 70 - 130 | 30 | |
| trans-1,2-Dichloroethene | ND | 126 | 127 | 0.8 | 119 | 117 | 1.7 | 70 - 130 | 30 | |
| trans-1,3-Dichloropropene | ND | 130 | 129 | 0.8 | 109 | 115 | 5.4 | 70 - 130 | 30 | |
| Trichloroethene | ND | 118 | 118 | 0.0 | 118 | 115 | 2.6 | 70 - 130 | 30 | |
| Trichlorofluoromethane | ND | 118 | 119 | 0.8 | 105 | 102 | 2.9 | 70 - 130 | 30 | |
| Trichlorotrifluoroethane | ND | 123 | 119 | 3.3 | 117 | 112 | 4.4 | 70 - 130 | 30 | |
| Vinyl chloride | ND | 114 | 121 | 6.0 | 125 | 120 | 4.1 | 70 - 130 | 30 | |
| % 1,2-dichlorobenzene-d4 | 101 | 99 | 102 | 3.0 | 100 | 100 | 0.0 | 70 - 130 | 30 | |
| % Bromofluorobenzene | 98 | 104 | 103 | 1.0 | 103 | 102 | 1.0 | 70 - 130 | 30 | |

# QA/QC Data

SDG I.D.: GBH78384

| Parameter | Blank | LCS % | LCSD % | LCS RPD | MS % | MSD % | MS RPD | % Rec Limits | % RPD Limits | |
|---|---|---|---|---|---|---|---|---|---|---|
| % Dibromofluoromethane | 99 | 98 | 100 | 2.0 | 95 | 98 | 3.1 | 70 - 130 | 30 | |
| % Toluene-d8 | 97 | 101 | 101 | 0.0 | 102 | 101 | 1.0 | 70 - 130 | 30 | |

**Comment:**

Additional 8260 criteria: 10% of LCS/LCSD compounds can be outside of acceptance criteria as long as recovery is 40-160%.

QA/QC Batch 300840, QC Sample No: BH78836 (BH78384)

## Volatiles (TCL) - Solid

| | | | | | | | | | | |
|---|---|---|---|---|---|---|---|---|---|---|
| 1,1,1-Trichloroethane | ND | 102 | 111 | 8.5 | 112 | 103 | 8.4 | 70 - 130 | 30 | |
| 1,1,2,2-Tetrachloroethane | ND | 116 | 124 | 6.7 | 136 | 108 | 23.0 | 70 - 130 | 30 | m |
| 1,1,2-Trichloroethane | ND | 97 | 105 | 7.9 | 106 | 94 | 12.0 | 70 - 130 | 30 | |
| 1,1-Dichloroethane | ND | 105 | 112 | 6.5 | 114 | 105 | 8.2 | 70 - 130 | 30 | |
| 1,1-Dichloroethene | ND | 105 | 114 | 8.2 | 114 | 101 | 12.1 | 70 - 130 | 30 | |
| 1,2,3-Trichlorobenzene | ND | 100 | 110 | 9.5 | 94 | 77 | 19.9 | 70 - 130 | 30 | |
| 1,2,4-Trichlorobenzene | ND | 98 | 109 | 10.6 | 95 | 77 | 20.9 | 70 - 130 | 30 | |
| 1,2-Dibromo-3-chloropropane | ND | 105 | 113 | 7.3 | 123 | 95 | 25.7 | 70 - 130 | 30 | |
| 1,2-Dibromoethane | ND | 98 | 106 | 7.8 | 105 | 94 | 11.1 | 70 - 130 | 30 | |
| 1,2-Dichlorobenzene | ND | 102 | 112 | 9.3 | 111 | 91 | 19.8 | 70 - 130 | 30 | |
| 1,2-Dichloroethane | ND | 97 | 105 | 7.9 | 103 | 93 | 10.2 | 70 - 130 | 30 | |
| 1,2-Dichloropropane | ND | 104 | 112 | 7.4 | 111 | 103 | 7.5 | 70 - 130 | 30 | |
| 1,3-Dichlorobenzene | ND | 100 | 112 | 11.3 | 112 | 93 | 18.5 | 70 - 130 | 30 | |
| 1,4-Dichlorobenzene | ND | 106 | 118 | 10.7 | 119 | 97 | 20.4 | 70 - 130 | 30 | |
| 1,4-dioxane | ND | 109 | 103 | 5.7 | 119 | 110 | 7.9 | 70 - 130 | 30 | |
| 2-Hexanone | ND | 96 | 105 | 9.0 | 104 | 85 | 20.1 | 70 - 130 | 30 | |
| 4-Methyl-2-pentanone | ND | 99 | 105 | 5.9 | 105 | 90 | 15.4 | 70 - 130 | 30 | |
| Acetone | ND | 101 | 106 | 4.8 | 87 | 73 | 17.5 | 70 - 130 | 30 | |
| Benzene | ND | 103 | 111 | 7.5 | 111 | 101 | 9.4 | 70 - 130 | 30 | |
| Bromochloromethane | ND | 104 | 114 | 9.2 | 110 | 98 | 11.5 | 70 - 130 | 30 | |
| Bromodichloromethane | ND | 105 | 112 | 6.5 | 107 | 97 | 9.8 | 70 - 130 | 30 | |
| Bromoform | ND | 98 | 109 | 10.6 | 104 | 92 | 12.2 | 70 - 130 | 30 | |
| Bromomethane | ND | 94 | 106 | 12.0 | 106 | 96 | 9.9 | 70 - 130 | 30 | |
| Carbon Disulfide | ND | 123 | 134 | 8.6 | 116 | 106 | 9.0 | 70 - 130 | 30 | l |
| Carbon tetrachloride | ND | 100 | 108 | 7.7 | 106 | 99 | 6.8 | 70 - 130 | 30 | |
| Chlorobenzene | ND | 102 | 112 | 9.3 | 112 | 100 | 11.3 | 70 - 130 | 30 | |
| Chloroethane | ND | 94 | 100 | 6.2 | 109 | 101 | 7.6 | 70 - 130 | 30 | |
| Chloroform | ND | 102 | 111 | 8.5 | 111 | 101 | 9.4 | 70 - 130 | 30 | |
| Chloromethane | ND | 107 | 113 | 5.5 | 119 | 108 | 9.7 | 70 - 130 | 30 | |
| cis-1,2-Dichloroethene | ND | 107 | 114 | 6.3 | 113 | 102 | 10.2 | 70 - 130 | 30 | |
| cis-1,3-Dichloropropene | ND | 107 | 117 | 8.9 | 108 | 98 | 9.7 | 70 - 130 | 30 | |
| Cyclohexane | ND | 97 | 103 | 6.0 | 119 | 109 | 8.8 | 70 - 130 | 30 | |
| Dibromochloromethane | ND | 105 | 113 | 7.3 | 110 | 97 | 12.6 | 70 - 130 | 30 | |
| Dichlorodifluoromethane | ND | 107 | 116 | 8.1 | 117 | 108 | 8.0 | 70 - 130 | 30 | |
| Ethylbenzene | ND | 105 | 116 | 10.0 | 118 | 104 | 12.6 | 70 - 130 | 30 | |
| Isopropylbenzene | ND | 103 | 113 | 9.3 | 128 | 106 | 18.8 | 70 - 130 | 30 | |
| m&p-Xylene | ND | 103 | 113 | 9.3 | 116 | 102 | 12.8 | 70 - 130 | 30 | |
| Methyl ethyl ketone | ND | 94 | 98 | 4.2 | 97 | 82 | 16.8 | 70 - 130 | 30 | |
| Methyl t-butyl ether (MTBE) | ND | 98 | 106 | 7.8 | 101 | 92 | 9.3 | 70 - 130 | 30 | |
| Methylacetate | ND | 100 | 109 | 8.6 | 92 | 78 | 16.5 | 70 - 130 | 30 | |
| Methylcyclohexane | ND | 93 | 100 | 7.3 | 112 | 101 | 10.3 | 70 - 130 | 30 | |
| Methylene chloride | ND | 101 | 108 | 6.7 | 99 | 91 | 8.4 | 70 - 130 | 30 | |
| o-Xylene | ND | 105 | 115 | 9.1 | 116 | 103 | 11.9 | 70 - 130 | 30 | |
| Styrene | ND | 105 | 115 | 9.1 | 111 | 99 | 11.4 | 70 - 130 | 30 | |
| Tetrachloroethene | ND | 100 | 112 | 11.3 | 115 | 102 | 12.0 | 70 - 130 | 30 | |
| Toluene | ND | 101 | 109 | 7.6 | 109 | 100 | 8.6 | 70 - 130 | 30 | |

# QA/QC Data

SDG I.D.: GBH78384

| Parameter | Blank | LCS % | LCSD % | LCS RPD | MS % | MSD % | MS RPD | % Rec Limits | % RPD Limits |
|---|---|---|---|---|---|---|---|---|---|
| trans-1,2-Dichloroethene | ND | 108 | 118 | 8.8 | 114 | 105 | 8.2 | 70 - 130 | 30 |
| trans-1,3-Dichloropropene | ND | 108 | 117 | 8.0 | 106 | 97 | 8.9 | 70 - 130 | 30 |
| Trichloroethene | ND | 99 | 106 | 6.8 | 107 | 97 | 9.8 | 70 - 130 | 30 |
| Trichlorofluoromethane | ND | 100 | 110 | 9.5 | 111 | 102 | 8.5 | 70 - 130 | 30 |
| Trichlorotrifluoroethane | ND | 104 | 112 | 7.4 | 114 | 104 | 9.2 | 70 - 130 | 30 |
| Vinyl chloride | ND | 102 | 110 | 7.5 | 119 | 110 | 7.9 | 70 - 130 | 30 |
| % 1,2-dichlorobenzene-d4 | 102 | 101 | 100 | 1.0 | 100 | 99 | 1.0 | 70 - 130 | 30 |
| % Bromofluorobenzene | 96 | 100 | 100 | 0.0 | 98 | 99 | 1.0 | 70 - 130 | 30 |
| % Dibromofluoromethane | 100 | 103 | 101 | 2.0 | 99 | 98 | 1.0 | 70 - 130 | 30 |
| % Toluene-d8 | 95 | 101 | 100 | 1.0 | 99 | 100 | 1.0 | 70 - 130 | 30 |

**Comment:**

Additional 8260 criteria: 10% of LCS/LCSD compounds can be outside of acceptance criteria as long as recovery is 40-160%.

l = This parameter is outside laboratory lcs/lcsd specified recovery limits.
m = This parameter is outside laboratory ms/msd specified recovery limits.

**If there are any questions regarding this data, please call Phoenix Client Services at extension 200.**

RPD - Relative Percent Difference
LCS - Laboratory Control Sample
LCSD - Laboratory Control Sample Duplicate
MS - Matrix Spike
MS Dup - Matrix Spike Duplicate
NC - No Criteria
Intf - Interference

Phyllis Shiller, Laboratory Director
March 09, 2015

# Sample Criteria Exceedences Report

## GBH78384 - HESNY-TUCK



Criteria: NY: 375, 375RRS, 375RS

State: NY

| SampNo | Acode | Phoenix Analyte | Criteria | Result | RL | Criteria | RL Criteria | Analysis Units |
|---|---|---|---|---|---|---|---|---|
| BH78384 | $8260_TCL_SM | Acetone | NY / 375-6.8 Volatiles / Unrestricted Use Soil | 72 | 41 | 50 | 50 | ug/kg |
| BH78384 | $8270_TCLR | Benz(a)anthracene | NY / 375-6.8 Semivolatiles / Residential | 1400 | 560 | 1000 | 1000 | ug/Kg |
| BH78384 | $8270_TCLR | Benz(a)anthracene | NY / 375-6.8 Semivolatiles / Residential Restricted | 1400 | 560 | 1000 | 1000 | ug/Kg |
| BH78384 | $8270_TCLR | Benz(a)anthracene | NY / 375-6.8 Semivolatiles / Unrestricted Use Soil | 1400 | 560 | 1000 | 1000 | ug/Kg |
| BH78384 | $8270_TCLR | Chrysene | NY / 375-6.8 Semivolatiles / Residential | 1500 | 560 | 1000 | 1000 | ug/Kg |
| BH78384 | $8270_TCLR | Chrysene | NY / 375-6.8 Semivolatiles / Unrestricted Use Soil | 1500 | 560 | 1000 | 1000 | ug/Kg |
| BH78384 | $8270_TCLR | Benzo(b)fluoranthene | NY / 375-6.8 Semivolatiles / Residential | 2300 | 560 | 1000 | 1000 | ug/Kg |
| BH78384 | $8270_TCLR | Benzo(b)fluoranthene | NY / 375-6.8 Semivolatiles / Residential Restricted | 2300 | 560 | 1000 | 1000 | ug/Kg |
| BH78384 | $8270_TCLR | Benzo(b)fluoranthene | NY / 375-6.8 Semivolatiles / Unrestricted Use Soil | 2300 | 560 | 1000 | 1000 | ug/Kg |
| BH78384 | $8270_TCLR | Benzo(k)fluoranthene | NY / 375-6.8 Semivolatiles / Unrestricted Use Soil | 840 | 560 | 800 | 800 | ug/Kg |
| BH78384 | $8270_TCLR | Benzo(a)pyrene | NY / 375-6.8 Semivolatiles / Residential | 2100 | 560 | 1000 | 1000 | ug/Kg |
| BH78384 | $8270_TCLR | Benzo(a)pyrene | NY / 375-6.8 Semivolatiles / Residential Restricted | 2100 | 560 | 1000 | 1000 | ug/Kg |
| BH78384 | $8270_TCLR | Benzo(a)pyrene | NY / 375-6.8 Semivolatiles / Unrestricted Use Soil | 2100 | 560 | 1000 | 1000 | ug/Kg |
| BH78384 | $8270_TCLR | Indeno(1,2,3-cd)pyrene | NY / 375-6.8 Semivolatiles / Residential | 1200 | 560 | 500 | 500 | ug/Kg |
| BH78384 | $8270_TCLR | Indeno(1,2,3-cd)pyrene | NY / 375-6.8 Semivolatiles / Residential Restricted | 1200 | 560 | 500 | 500 | ug/Kg |
| BH78384 | $8270_TCLR | Indeno(1,2,3-cd)pyrene | NY / 375-6.8 Semivolatiles / Unrestricted Use Soil | 1200 | 560 | 500 | 500 | ug/Kg |
| BH78385 | $8260_TCL_SM | Acetone | NY / 375-6.8 Volatiles / Unrestricted Use Soil | 62 | 51 | 50 | 50 | ug/kg |
| BH78385 | CR-SM | Chromium | NY / 375-6.8 Metals / Unrestricted Use Soil | 37.8 | 0.37 | 30 | | mg/Kg |
| BH78385 | CU-SM | Copper | NY / 375-6.8 Metals / Unrestricted Use Soil | 107 | 0.37 | 50 | 50 | mg/kg |
| BH78385 | PB-SM | Lead | NY / 375-6.8 Metals / Unrestricted Use Soil | 95.8 | 0.37 | 63 | 63 | mg/Kg |
| BH78385 | ZN-SM | Zinc | NY / 375-6.8 Metals / Unrestricted Use Soil | 168 | 3.7 | 109 | 109 | mg/Kg |
| BH78386 | $8270_TCLR | Indeno(1,2,3-cd)pyrene | NY / 375-6.8 Semivolatiles / Residential | ND | 2600 | 500 | 500 | ug/Kg |
| BH78386 | $8270_TCLR | Benz(a)anthracene | NY / 375-6.8 Semivolatiles / Residential | 2800 | 2600 | 1000 | 1000 | ug/Kg |
| BH78386 | $8270_TCLR | Benzo(a)pyrene | NY / 375-6.8 Semivolatiles / Residential | 3400 | 2600 | 1000 | 1000 | ug/Kg |
| BH78386 | $8270_TCLR | Benzo(b)fluoranthene | NY / 375-6.8 Semivolatiles / Residential | 4000 | 2600 | 1000 | 1000 | ug/Kg |
| BH78386 | $8270_TCLR | Benzo(k)fluoranthene | NY / 375-6.8 Semivolatiles / Residential | ND | 2600 | 1000 | 1000 | ug/Kg |
| BH78386 | $8270_TCLR | Dibenz(a,h)anthracene | NY / 375-6.8 Semivolatiles / Residential | ND | 2600 | 330 | 330 | ug/Kg |
| BH78386 | $8270_TCLR | Chrysene | NY / 375-6.8 Semivolatiles / Residential | 2900 | 2600 | 1000 | 1000 | ug/Kg |
| BH78386 | $8270_TCLR | Pentachlorophenol | NY / 375-6.8 Semivolatiles / Residential | ND | 3700 | 2400 | 2400 | ug/Kg |
| BH78386 | $8270_TCLR | Benzo(b)fluoranthene | NY / 375-6.8 Semivolatiles / Residential Restricted | 4000 | 2600 | 1000 | 1000 | ug/Kg |
| BH78386 | $8270_TCLR | Indeno(1,2,3-cd)pyrene | NY / 375-6.8 Semivolatiles / Residential Restricted | ND | 2600 | 500 | 500 | ug/Kg |
| BH78386 | $8270_TCLR | Benz(a)anthracene | NY / 375-6.8 Semivolatiles / Residential Restricted | 2800 | 2600 | 1000 | 1000 | ug/Kg |
| BH78386 | $8270_TCLR | Dibenz(a,h)anthracene | NY / 375-6.8 Semivolatiles / Residential Restricted | ND | 2600 | 330 | 330 | ug/Kg |
| BH78386 | $8270_TCLR | Benzo(a)pyrene | NY / 375-6.8 Semivolatiles / Residential Restricted | 3400 | 2600 | 1000 | 1000 | ug/Kg |
| BH78386 | $8270_TCLR | Benz(a)anthracene | NY / 375-6.8 Semivolatiles / Unrestricted Use Soil | 2800 | 2600 | 1000 | 1000 | ug/Kg |
| BH78386 | $8270_TCLR | Benzo(a)pyrene | NY / 375-6.8 Semivolatiles / Unrestricted Use Soil | 3400 | 2600 | 1000 | 1000 | ug/Kg |
| BH78386 | $8270_TCLR | Chrysene | NY / 375-6.8 Semivolatiles / Unrestricted Use Soil | 2900 | 2600 | 1000 | 1000 | ug/Kg |
| BH78386 | $8270_TCLR | Benzo(b)fluoranthene | NY / 375-6.8 Semivolatiles / Unrestricted Use Soil | 4000 | 2600 | 1000 | 1000 | ug/Kg |
| BH78386 | $8270_TCLR | 2-Methylphenol (o-cresol) | NY / 375-6.8 Semivolatiles / Unrestricted Use Soil | ND | 2600 | 330 | 330 | ug/Kg |
| BH78386 | $8270_TCLR | Benzo(k)fluoranthene | NY / 375-6.8 Semivolatiles / Unrestricted Use Soil | ND | 2600 | 800 | 800 | ug/Kg |

# Sample Criteria Exceedences Report

## GBH78384 - HESNY-TUCK



Criteria: NY: 375, 375RRS, 375RS

State: NY

| SampNo | Acode | Phoenix Analyte | Criteria | Result | RL | Criteria | RL Criteria | Analysis Units |
|---|---|---|---|---|---|---|---|---|
| BH78386 | $8270_TCLR | Phenol | NY / 375-6.8 Semivolatiles / Unrestricted Use Soil | ND | 2600 | 330 | 330 | ug/Kg |
| BH78386 | $8270_TCLR | Dibenz(a,h)anthracene | NY / 375-6.8 Semivolatiles / Unrestricted Use Soil | ND | 2600 | 330 | 330 | ug/Kg |
| BH78386 | $8270_TCLR | Pentachlorophenol | NY / 375-6.8 Semivolatiles / Unrestricted Use Soil | ND | 3700 | 800 | 800 | ug/Kg |
| BH78386 | $8270_TCLR | Indeno(1,2,3-cd)pyrene | NY / 375-6.8 Semivolatiles / Unrestricted Use Soil | ND | 2600 | 500 | 500 | ug/Kg |
| BH78386 | CU-SM | Copper | NY / 375-6.8 Metals / Unrestricted Use Soil | 72.0 | 0.39 | 50 | 50 | mg/kg |
| BH78387 | $8270_TCLR | Dibenz(a,h)anthracene | NY / 375-6.8 Semivolatiles / Residential | ND | 2700 | 330 | 330 | ug/Kg |
| BH78387 | $8270_TCLR | Pentachlorophenol | NY / 375-6.8 Semivolatiles / Residential | ND | 3900 | 2400 | 2400 | ug/Kg |
| BH78387 | $8270_TCLR | Chrysene | NY / 375-6.8 Semivolatiles / Residential | 3300 | 2700 | 1000 | 1000 | ug/Kg |
| BH78387 | $8270_TCLR | Benzo(k)fluoranthene | NY / 375-6.8 Semivolatiles / Residential | ND | 2700 | 1000 | 1000 | ug/Kg |
| BH78387 | $8270_TCLR | Benzo(b)fluoranthene | NY / 375-6.8 Semivolatiles / Residential | 3900 | 2700 | 1000 | 1000 | ug/Kg |
| BH78387 | $8270_TCLR | Indeno(1,2,3-cd)pyrene | NY / 375-6.8 Semivolatiles / Residential | ND | 2700 | 500 | 500 | ug/Kg |
| BH78387 | $8270_TCLR | Benz(a)anthracene | NY / 375-6.8 Semivolatiles / Residential | 3700 | 2700 | 1000 | 1000 | ug/Kg |
| BH78387 | $8270_TCLR | Benzo(a)pyrene | NY / 375-6.8 Semivolatiles / Residential | 3000 | 2700 | 1000 | 1000 | ug/Kg |
| BH78387 | $8270_TCLR | Indeno(1,2,3-cd)pyrene | NY / 375-6.8 Semivolatiles / Residential Restricted | ND | 2700 | 500 | 500 | ug/Kg |
| BH78387 | $8270_TCLR | Benzo(a)pyrene | NY / 375-6.8 Semivolatiles / Residential Restricted | 3000 | 2700 | 1000 | 1000 | ug/Kg |
| BH78387 | $8270_TCLR | Dibenz(a,h)anthracene | NY / 375-6.8 Semivolatiles / Residential Restricted | ND | 2700 | 330 | 330 | ug/Kg |
| BH78387 | $8270_TCLR | Benz(a)anthracene | NY / 375-6.8 Semivolatiles / Residential Restricted | 3700 | 2700 | 1000 | 1000 | ug/Kg |
| BH78387 | $8270_TCLR | Benzo(b)fluoranthene | NY / 375-6.8 Semivolatiles / Residential Restricted | 3900 | 2700 | 1000 | 1000 | ug/Kg |
| BH78387 | $8270_TCLR | Benzo(k)fluoranthene | NY / 375-6.8 Semivolatiles / Unrestricted Use Soil | ND | 2700 | 800 | 800 | ug/Kg |
| BH78387 | $8270_TCLR | Chrysene | NY / 375-6.8 Semivolatiles / Unrestricted Use Soil | 3300 | 2700 | 1000 | 1000 | ug/Kg |
| BH78387 | $8270_TCLR | Benzo(a)pyrene | NY / 375-6.8 Semivolatiles / Unrestricted Use Soil | 3000 | 2700 | 1000 | 1000 | ug/Kg |
| BH78387 | $8270_TCLR | Benz(a)anthracene | NY / 375-6.8 Semivolatiles / Unrestricted Use Soil | 3700 | 2700 | 1000 | 1000 | ug/Kg |
| BH78387 | $8270_TCLR | Benzo(b)fluoranthene | NY / 375-6.8 Semivolatiles / Unrestricted Use Soil | 3900 | 2700 | 1000 | 1000 | ug/Kg |
| BH78387 | $8270_TCLR | 2-Methylphenol (o-cresol) | NY / 375-6.8 Semivolatiles / Unrestricted Use Soil | ND | 2700 | 330 | 330 | ug/Kg |
| BH78387 | $8270_TCLR | Indeno(1,2,3-cd)pyrene | NY / 375-6.8 Semivolatiles / Unrestricted Use Soil | ND | 2700 | 500 | 500 | ug/Kg |
| BH78387 | $8270_TCLR | Pentachlorophenol | NY / 375-6.8 Semivolatiles / Unrestricted Use Soil | ND | 3900 | 800 | 800 | ug/Kg |
| BH78387 | $8270_TCLR | Phenol | NY / 375-6.8 Semivolatiles / Unrestricted Use Soil | ND | 2700 | 330 | 330 | ug/Kg |
| BH78387 | $8270_TCLR | Dibenz(a,h)anthracene | NY / 375-6.8 Semivolatiles / Unrestricted Use Soil | ND | 2700 | 330 | 330 | ug/Kg |
| BH78388 | ZN-SM | Zinc | NY / 375-6.8 Metals / Unrestricted Use Soil | 229 | 3.9 | 109 | 109 | mg/Kg |
| BH78389 | ZN-SM | Zinc | NY / 375-6.8 Metals / Unrestricted Use Soil | 158 | 3.4 | 109 | 109 | mg/Kg |

Phoenix Laboratories does not assume responsibility for the data contained in this report. It is provided as an additional tool to identify requested criteria exceedences. All efforts are made to ensure the accuracy of the data (obtained from appropriate agencies). A lack of exceedence information does not necessarily suggest conformance to the criteria. It is ultimately the site professional's responsibility to determine appropriate compliance.

**Environmental Laboratories, Inc.**
**587 East Middle Turnpike, P.O.Box 370, Manchester, CT 06045**
**Tel. (860) 645-1102 Fax (860) 645-0823**

# NY Temperature Narration

**March 09, 2015**

**SDG I.D.: GBH78384**

The samples in this delivery group were received at 4°C.
(Note acceptance criteria is above freezing up to 6°C)

**PHOENIX** Environmental Laboratories, Inc.

# NY/NJ CHAIN OF CUSTODY RECORD

587 East Middle Turnpike, P.O. Box 370, Manchester, CT 06040
Email: info@phoenixlabs.com Fax (860) 645-0823
**Client Services (860) 645-8726**

Temp 4 (WK) Pg 1 of 1

Data Delivery:
☐ Fax #:
☒ Email: info@hesny.com

Customer:
Address: HYDROENVIRONMENTAL SOLUTIONS
ONE DEANS BRIDGE ROAD
SOMERS, NEW YORK 10589

Project: 109 Marbledale Rd, Tuckahoe, NY
Report to: Tim Carr
Invoice to:

Project P.O:
Phone #: 914-276-2560
Fax #: 914-276-2664

Client Sample - Information - Identification

Sampler's Signature: [signature] Date: 2/27/15

Analysis Request

Matrix Code:
DW=drinking water WW=wastewater S=soil/solid O=oil
GW=groundwater SL=sludge A=air X=other

| Phoenix Sample # | Customer Sample Identification | Sample Matrix | Date Sampled | Time Sampled | TCL VOC | TCL SVOC | TCL PCB | Tal Metals | Cyanide | Arsenic | Soil VOA [X] Methanol [ ] S. Bisulfate [X] H2O | GL Soil container ( 8 ) oz | GL Soil container ( ) oz | 40 ml VOA Vial [ ] As is [ ] HCl | GL Amber 1000ml [ ] As is [ ] H2SO4 | PL As is [ ] 1250ml [ ] 500ml [ ] 1000ml | PL H2SO4 [ ] 1250ml [ ] 1500ml | PL HNO3 250ml | PL NaOH 250ml | Bacteria Bottle |
|---|---|---|---|---|---|---|---|---|---|---|---|---|---|---|---|---|---|---|---|---|
| 78384 | TB-12 (4-6) | S | 2/26/15 | | ↓ | ↓ | ↓ | ↓ | ↓ | ↓ | 3 | 2 | | | | | | | | |
| 78385 | TB-12 (28-30) | ↓ | ↓ | | ↓ | ↓ | ↓ | ↓ | ↓ | ↓ | ↓ | ↓ | | | | | | | | |
| 78386 | TB-11 (4-6) | ↓ | 2/27/15 | | ↓ | ↓ | ↓ | ↓ | ↓ | ↓ | ↓ | ↓ | | | | | | | | |
| 78387 | TB-11 (21-23) | ↓ | ↓ | | ↓ | ↓ | ↓ | ↓ | ↓ | ↓ | ↓ | ↓ | | | | | | | | |
| 78388 | TB-8 (2-4) | ↓ | ↓ | | ↓ | ↓ | ↓ | ↓ | ↓ | ↓ | ↓ | ↓ | | | | | | | | |
| 78389 | TB-8 (20-22) | ↓ | ↓ | | ↓ | ↓ | ↓ | ↓ | ↓ | ↓ | ↓ | ↓ | | | | | | | | |

| Relinquished by: | Accepted by: | Date: | Time: |
|---|---|---|---|
| [signature] | [signature] | 3-2-15 | 12:10 |
| [signature] | Unknown PEL | 3/2/15 | 15:48 |

Comments, Special Requirements or Regulations:

Turnaround:
☐ 1 Day*
☐ 2 Days*
☐ 3 Days*
☒ Standard
☐ Other
* SURCHARGE APPLIES

NJ
☐ Res. Criteria
☐ Non-Res. Criteria
☐ Impact to GW Soil Cleanup Criteria
☐ GW Criteria

NY
☐ TAGM 4046 GW
☐ TAGM 4046 SOIL
☒ NY375 Unrestricted Soil
☒ NY375 Residential Soil
☒ NY375 Restricted Non-Residential Soil

Data Format
☐ Phoenix Std Report
☐ Excel
☒ PDF
☐ GIS/Key
☒ EQuIS
☐ NJ Hazsite EDD
☐ NY EZ EDD (ASP)
☐ Other

State where samples were collected: NY

Data Package
☐ NJ Reduced Deliv. *
☐ NY Enhanced (ASP B) *
☐ Other

PHOENIX
Environmental Laboratories, Inc.

Wednesday, April 29, 2015

Attn: Mr. Tim Carr
HydroEnvironmental Solutions, Inc.
One Deans Bridge Rd
Somers NY 10589

Project ID: 109 MARBLEDALE RD TUCKAHOE NY
Sample ID#s: BH78390 - BH78391

This laboratory is in compliance with the NELAC requirements of procedures used except where indicated.

This report contains results for the parameters tested, under the sampling conditions described on the Chain Of Custody, as received by the laboratory.

All soils, solids and sludges are reported on a dry weight basis unless otherwise noted in the sample comments.

A scanned version of the COC form accompanies the analytical report and is an exact duplicate of the original.

Enclosed are revised Analysis Report pages. Please replace and discard the original pages. If you have any questions concerning this testing, please do not hesitate to contact Phoenix Client Services at ext. 200.

Sincerely yours,

Phyllis Shiller

Phyllis Shiller
Laboratory Director

NELAC - #NY11301
CT Lab Registration #PH-0618
MA Lab Registration #MA-CT-007
ME Lab Registration #CT-007
NH Lab Registration #213693-A,B
NJ Lab Registration #CT-003
NY Lab Registration #11301
PA Lab Registration #68-03530
RI Lab Registration #63
VT Lab Registration #VT11301

587 East Middle Turnpike, P.O. Box 370, Manchester, CT 06040
Telephone (860) 645-1102 Fax (860) 645-0823

PHOENIX

Environmental Laboratories, Inc.
587 East Middle Turnpike, P.O.Box 370, Manchester, CT 06045
Tel. (860) 645-1102 Fax (860) 645-0823

ACCREDITED IN ACCORDANCE WITH nelac
NY # 11301

# SDG Comments

April 29, 2015

SDG I.D.: GBH78390

---

Version 1: Analysis results minus QC and forms.

Version 2: Complete report with QC and forms.

Please be advised that the NY 375 soil criteria for chromium are based on hexavalent chromium and trivalent chromium.

**Environmental Laboratories, Inc.**
**587 East Middle Turnpike, P.O.Box 370, Manchester, CT 06045**
**Tel. (860) 645-1102 Fax (860) 645-0823**

ACCREDITED IN ACCORDANCE WITH nelac NY # 11301

# NY ANALYTICAL SERVICES PROTOCOL
# DATA PACKAGE

**Client: HydroEnvironmental Solutions, Inc.**

**Project: 109 MARBLEDALE RD TUCKAHOE NY**

**Laboratory Project: GBH78390**

PHOENIX

**Environmental Laboratories, Inc.**
587 East Middle Turnpike, P.O.Box 370, Manchester, CT 06040
Tel. (860) 645-1102 Fax (860) 645-0823

ACCREDITED IN ACCORDANCE WITH nelac NY # 11301

# NY Analytical Services Protocol Format

**April 29, 2015** **SDG I.D.: GBH78390**

**HydroEnvironmental Solutions, Inc. 109 MARBLEDALE RD TUCKAHOE NY**

## Methodology Summary

### Volatiles

USEPA SW-846 Test Methods for Evaluating Solid Waste Physical/Chemical Methods 3rd Ed. Update V, Method 8260C and Environmental Protection Agency, EPA-600/4-79-020, Revised March 1983 (Methods 624) as printed in 40CFR part 136.

### Accelerated Solvent Extraction (ASE)

Soil Sample - USEPA SW-846 Test Methods for Evaluating Solid Waste Physical/Chemical Methods 3rd Ed.Update III, Method 3545A.

### Mercury Prep

Soil Sample - USEPA SW-846 Test Methods for Evaluating Solid Waste Physical/Chemical Methods 3rd Ed. Update IV, Method 7471B.

### Metals

ICP :
USEPA SW-846 Test Methods for Evaluating Solid Waste Physical/Chemical Methods 3rd Ed. Update IV, Method 6010C.
Mercury:
USEPA SW-846 Test Methods for Evaluating Solid Waste Physical/Chemical Methods Update III, 7471

### Polychlorinated Biphenyls (PCBs):

USEPA SW-846 Test Methods for Evaluating Solid Waste Physical/Chemical Methods 3rd Ed. Update IV, Method 8082A.

### Semivolatile Organic Compounds

USEPA SW-846 Test Methods for Evaluating Solid Waste Physical/Chemical Methods 3rd Ed. Update IV, Method 8270D.

## Sample Id Cross Reference

| Client Id | Lab Id | Matrix |
|---|---|---|
| TB-13 4-6 | BH78390 | SOLID |
| TB-13 26-28 | BH78391 | SOLID |

PHOENIX

**Environmental Laboratories, Inc.**
587 East Middle Turnpike, P.O.Box 370, Manchester, CT 06040
Tel. (860) 645-1102 Fax (860) 645-0823

ACCREDITED IN ACCORDANCE WITH nelac NY # 11301

# NY Analytical Services Protocol Format

**April 29, 2015** **SDG I.D.: GBH78390**

**HydroEnvironmental Solutions, Inc. 109 MARBLEDALE RD TUCKAHOE NY**

## Laboratory Chronicle

**The samples in this delivery group were received at 4°C.**

| Sample | Analysis | Collection Date | Extraction Date | Analysis Date | Analyst | Hold Time Met |
|---|---|---|---|---|---|---|
| BH78390 | 1,4-dioxane | 02/26/15 | 03/04/15 | 03/04/15 | JLI | Y |
| BH78390 | Aluminum | 02/26/15 | 03/02/15 | 03/03/15 | LK | Y |
| BH78390 | Antimony | 02/26/15 | 03/02/15 | 03/03/15 | LK | Y |
| BH78390 | Arsenic | 02/26/15 | 03/02/15 | 03/03/15 | EK | Y |
| BH78390 | Barium | 02/26/15 | 03/02/15 | 03/03/15 | LK | Y |
| BH78390 | Beryllium | 02/26/15 | 03/02/15 | 03/03/15 | EK | Y |
| BH78390 | Cadmium | 02/26/15 | 03/02/15 | 03/03/15 | EK | Y |
| BH78390 | Calcium | 02/26/15 | 03/02/15 | 03/03/15 | LK | Y |
| BH78390 | Chromium | 02/26/15 | 03/02/15 | 03/03/15 | EK | Y |
| BH78390 | Cobalt | 02/26/15 | 03/02/15 | 03/03/15 | EK | Y |
| BH78390 | Copper | 02/26/15 | 03/02/15 | 03/03/15 | EK | Y |
| BH78390 | Iron | 02/26/15 | 03/02/15 | 03/03/15 | LK | Y |
| BH78390 | Lead | 02/26/15 | 03/02/15 | 03/03/15 | LK | Y |
| BH78390 | Magnesium | 02/26/15 | 03/02/15 | 03/03/15 | LK | Y |
| BH78390 | Manganese | 02/26/15 | 03/02/15 | 03/03/15 | EK | Y |
| BH78390 | Mercury | 02/26/15 | 03/03/15 | 03/03/15 | MA | Y |
| BH78390 | Nickel | 02/26/15 | 03/02/15 | 03/03/15 | EK | Y |
| BH78390 | Polychlorinated Biphenyls | 02/26/15 | 03/02/15 | 03/03/15 | AW | Y |
| BH78390 | Potassium | 02/26/15 | 03/02/15 | 03/03/15 | LK | Y |
| BH78390 | Selenium | 02/26/15 | 03/02/15 | 03/03/15 | LK | Y |
| BH78390 | Semivolatiles | 02/26/15 | 03/02/15 | 03/04/15 | DD | Y |
| BH78390 | Silver | 02/26/15 | 03/02/15 | 03/03/15 | EK | Y |
| BH78390 | Sodium | 02/26/15 | 03/02/15 | 03/03/15 | LK | Y |
| BH78390 | Thallium | 02/26/15 | 03/02/15 | 03/03/15 | LK | Y |
| BH78390 | Total Cyanide (SW9010C Distillation) | 02/26/15 | 03/04/15 | 03/04/15 | O/B/E | Y |
| BH78390 | Vanadium | 02/26/15 | 03/02/15 | 03/03/15 | LK | Y |
| BH78390 | Volatiles | 02/26/15 | 03/04/15 | 03/04/15 | JLI | Y |
| BH78390 | Zinc | 02/26/15 | 03/02/15 | 03/03/15 | LK | Y |
| BH78391 | 1,4-dioxane | 02/26/15 | 03/04/15 | 03/04/15 | JLI | Y |
| BH78391 | Aluminum | 02/26/15 | 03/02/15 | 03/03/15 | LK | Y |
| BH78391 | Antimony | 02/26/15 | 03/02/15 | 03/03/15 | LK | Y |
| BH78391 | Arsenic | 02/26/15 | 03/02/15 | 03/03/15 | EK | Y |

PHOENIX

**Environmental Laboratories, Inc.**
587 East Middle Turnpike, P.O.Box 370, Manchester, CT 06040
Tel. (860) 645-1102 Fax (860) 645-0823

ACCREDITED IN ACCORDANCE WITH nelac NY # 11301

# NY Analytical Services Protocol Format

**April 29, 2015** **SDG I.D.: GBH78390**

**HydroEnvironmental Solutions, Inc. 109 MARBLEDALE RD TUCKAHOE NY**

| | | | | | | |
|---|---|---|---|---|---|---|
| BH78391 | Barium | 02/26/15 | 03/02/15 | 03/03/15 | LK | Y |
| BH78391 | Beryllium | 02/26/15 | 03/02/15 | 03/03/15 | EK | Y |
| BH78391 | Cadmium | 02/26/15 | 03/02/15 | 03/03/15 | EK | Y |
| BH78391 | Calcium | 02/26/15 | 03/02/15 | 03/03/15 | LK | Y |
| BH78391 | Chromium | 02/26/15 | 03/02/15 | 03/03/15 | EK | Y |
| BH78391 | Cobalt | 02/26/15 | 03/02/15 | 03/03/15 | EK | Y |
| BH78391 | Copper | 02/26/15 | 03/02/15 | 03/03/15 | EK | Y |
| BH78391 | Iron | 02/26/15 | 03/02/15 | 03/03/15 | LK | Y |
| BH78391 | Lead | 02/26/15 | 03/02/15 | 03/03/15 | LK | Y |
| BH78391 | Magnesium | 02/26/15 | 03/02/15 | 03/03/15 | LK | Y |
| BH78391 | Manganese | 02/26/15 | 03/02/15 | 03/03/15 | EK | Y |
| BH78391 | Mercury | 02/26/15 | 03/03/15 | 03/03/15 | MA | Y |
| BH78391 | Nickel | 02/26/15 | 03/02/15 | 03/03/15 | EK | Y |
| BH78391 | Polychlorinated Biphenyls | 02/26/15 | 03/02/15 | 03/03/15 | AW | Y |
| BH78391 | Potassium | 02/26/15 | 03/02/15 | 03/03/15 | LK | Y |
| BH78391 | Selenium | 02/26/15 | 03/02/15 | 03/03/15 | LK | Y |
| BH78391 | Semivolatiles | 02/26/15 | 03/02/15 | 03/03/15 | DD | Y |
| BH78391 | Silver | 02/26/15 | 03/02/15 | 03/03/15 | EK | Y |
| BH78391 | Sodium | 02/26/15 | 03/02/15 | 03/03/15 | LK | Y |
| BH78391 | Thallium | 02/26/15 | 03/02/15 | 03/03/15 | LK | Y |
| BH78391 | Total Cyanide (SW9010C Distillation) | 02/26/15 | 03/04/15 | 03/04/15 | O/B/E | Y |
| BH78391 | Vanadium | 02/26/15 | 03/02/15 | 03/03/15 | LK | Y |
| BH78391 | Volatiles | 02/26/15 | 03/04/15 | 03/04/15 | JLI | Y |
| BH78391 | Zinc | 02/26/15 | 03/02/15 | 03/03/15 | LK | Y |

PHOENIX

Environmental Laboratories, Inc.
587 East Middle Turnpike, P.O.Box 370, Manchester, CT 06045
Tel. (860) 645-1102 Fax (860) 645-0823

ACCREDITED IN ACCORDANCE WITH nelac NY # 11301

# Analysis Report

April 29, 2015

FOR: Attn: Mr. Tim Carr
HydroEnvironmental Solutions, Inc.
One Deans Bridge Rd
Somers NY 10589

| Sample Information | | Custody Information | | Date | Time |
|---|---|---|---|---|---|
| Matrix: | SOLID | Collected by: | RG | 02/26/15 | |
| Location Code: | HESNY-TUCK | Received by: | SW | 03/02/15 | 15:48 |
| Rush Request: | 72 Hour | Analyzed by: | see "By" below | | |
| P.O.#: | | | | | |

## Laboratory Data

SDG ID: GBH78390
Phoenix ID: BH78390

Project ID: 109 MARBLEDALE RD TUCKAHOE NY
Client ID: TB-13 4-6

| Parameter | Result | | RL/ PQL | LOD/ MDL | Units | Dilution | Date/Time | By | Reference |
|---|---|---|---|---|---|---|---|---|---|
| Silver | < 0.39 | | 0.39 | 0.39 | mg/Kg | 1 | 03/03/15 | EK | SW6010C |
| Aluminum | 8050 | | 39 | 7.7 | mg/Kg | 10 | 03/03/15 | LK | SW6010C |
| Arsenic | 4.5 | | 0.8 | 0.77 | mg/Kg | 1 | 03/03/15 | EK | SW6010C |
| Barium | 76.9 | | 0.8 | 0.39 | mg/Kg | 1 | 03/03/15 | LK | SW6010C |
| Beryllium | 0.32 | | 0.31 | 0.15 | mg/Kg | 1 | 03/03/15 | EK | SW6010C |
| Calcium | 31500 | N | 39 | 36 | mg/Kg | 10 | 03/03/15 | LK | SW6010C |
| Cadmium | < 0.39 | | 0.39 | 0.15 | mg/Kg | 1 | 03/03/15 | EK | SW6010C |
| Cobalt | 7.17 | | 0.39 | 0.39 | mg/Kg | 1 | 03/03/15 | EK | SW6010C |
| Chromium | 24.0 | | 0.39 | 0.39 | mg/Kg | 1 | 03/03/15 | EK | SW6010C |
| Copper | 35.4 | | 0.39 | 0.39 | mg/kg | 1 | 03/03/15 | EK | SW6010C |
| Iron | 13600 | | 39 | 39 | mg/Kg | 10 | 03/03/15 | LK | SW6010C |
| Mercury | 0.32 | | 0.03 | 0.02 | mg/Kg | 1 | 03/03/15 | MA | SW7471B |
| Potassium | 1930 | N | 8 | 3.0 | mg/Kg | 1 | 03/03/15 | LK | SW6010C |
| Magnesium | 16600 | | 39 | 39 | mg/Kg | 10 | 03/03/15 | LK | SW6010C |
| Manganese | 195 | | 3.9 | 3.9 | mg/Kg | 10 | 03/03/15 | EK | SW6010C |
| Sodium | 230 | N | 8 | 3.3 | mg/Kg | 1 | 03/03/15 | LK | SW6010C |
| Nickel | 25.3 | | 0.39 | 0.39 | mg/Kg | 1 | 03/03/15 | EK | SW6010C |
| Lead | 82.8 | | 0.8 | 0.39 | mg/Kg | 1 | 03/03/15 | LK | SW6010C |
| Antimony | < 1.9 | | 1.9 | 1.9 | mg/Kg | 1 | 03/03/15 | LK | SW6010C |
| Selenium | < 1.5 | | 1.5 | 1.3 | mg/Kg | 1 | 03/03/15 | LK | SW6010C |
| Thallium | < 1.5 | | 1.5 | 1.5 | mg/Kg | 1 | 03/03/15 | LK | SW6010C |
| Vanadium | 32.6 | | 0.4 | 0.39 | mg/Kg | 1 | 03/03/15 | LK | SW6010C |
| Zinc | 215 | | 7.7 | 3.9 | mg/Kg | 10 | 03/03/15 | LK | SW6010C |
| Percent Solid | 84 | | | | % | | 03/02/15 | i | SW846-%Solid |
| Total Cyanide | < 0.54 | | 0.54 | 0.27 | mg/Kg | 1 | 03/04/15 | O/B/E | SW9012B |
| Soil Extraction for PCB | Completed | | | | | | 03/02/15 | CC/H | SW3545A |
| Soil Extraction for SVOA | Completed | | | | | | 03/02/15 | CJ/VH | SW3545A |
| Mercury Digestion | Completed | | | | | | 03/03/15 | I/I | SW7471B |

Project ID: 109 MARBLEDALE RD TUCKAHOE NY
Client ID: TB-13 4-6

Phoenix I.D.: BH78390

| Parameter | Result | | RL/ PQL | LOD/ MDL | Units | Dilution | Date/Time | By | Reference | |
|---|---|---|---|---|---|---|---|---|---|---|
| Total Metals Digest | Completed | | | | | | 03/02/15 | CB/AG | SW3050B | |
| **Polychlorinated Biphenyls** | | | | | | | | | | |
| PCB-1016 | ND | | 78 | 78 | ug/Kg | 2 | 03/03/15 | AW | SW8082A | |
| PCB-1221 | ND | | 78 | 78 | ug/Kg | 2 | 03/03/15 | AW | SW8082A | |
| PCB-1232 | ND | | 78 | 78 | ug/Kg | 2 | 03/03/15 | AW | SW8082A | |
| PCB-1242 | ND | | 78 | 78 | ug/Kg | 2 | 03/03/15 | AW | SW8082A | |
| PCB-1248 | ND | | 78 | 78 | ug/Kg | 2 | 03/03/15 | AW | SW8082A | |
| PCB-1254 | ND | | 78 | 78 | ug/Kg | 2 | 03/03/15 | AW | SW8082A | |
| PCB-1260 | ND | | 78 | 78 | ug/Kg | 2 | 03/03/15 | AW | SW8082A | |
| PCB-1262 | ND | | 78 | 78 | ug/Kg | 2 | 03/03/15 | AW | SW8082A | |
| PCB-1268 | ND | | 78 | 78 | ug/Kg | 2 | 03/03/15 | AW | SW8082A | |
| **QA/QC Surrogates** | | | | | | | | | | |
| % DCBP | 82 | | | | % | 2 | 03/03/15 | AW | 30 - 150 % | |
| % TCMX | 84 | | | | % | 2 | 03/03/15 | AW | 30 - 150 % | |
| **1,4-dioxane** | | | | | | | | | | |
| 1,4-dioxane | ND | | 100 | 100 | ug/kg | 1 | 03/04/15 | JLI | SW8260C | |
| **Volatiles** | | | | | | | | | | |
| 1,1,1-Trichloroethane | ND | | 6.0 | 0.60 | ug/Kg | 1 | 03/04/15 | JLI | SW8260C | |
| 1,1,2,2-Tetrachloroethane | ND | | 6.0 | 1.2 | ug/Kg | 1 | 03/04/15 | JLI | SW8260C | |
| 1,1,2-Trichloroethane | ND | | 6.0 | 1.2 | ug/Kg | 1 | 03/04/15 | JLI | SW8260C | |
| 1,1-Dichloroethane | ND | | 6.0 | 1.2 | ug/Kg | 1 | 03/04/15 | JLI | SW8260C | |
| 1,1-Dichloroethene | ND | | 6.0 | 0.60 | ug/Kg | 1 | 03/04/15 | JLI | SW8260C | |
| 1,2,3-Trichlorobenzene | ND | | 6.0 | 1.2 | ug/Kg | 1 | 03/04/15 | JLI | SW8260C | |
| 1,2,4-Trichlorobenzene | ND | | 6.0 | 1.2 | ug/Kg | 1 | 03/04/15 | JLI | SW8260C | |
| 1,2-Dibromo-3-chloropropane | ND | | 6.0 | 1.2 | ug/Kg | 1 | 03/04/15 | JLI | SW8260C | |
| 1,2-Dibromoethane | ND | | 6.0 | 0.60 | ug/Kg | 1 | 03/04/15 | JLI | SW8260C | |
| 1,2-Dichlorobenzene | ND | | 6.0 | 0.60 | ug/Kg | 1 | 03/04/15 | JLI | SW8260C | |
| 1,2-Dichloroethane | ND | | 6.0 | 0.60 | ug/Kg | 1 | 03/04/15 | JLI | SW8260C | |
| 1,2-Dichloropropane | ND | | 6.0 | 1.2 | ug/Kg | 1 | 03/04/15 | JLI | SW8260C | |
| 1,3-Dichlorobenzene | ND | | 6.0 | 0.60 | ug/Kg | 1 | 03/04/15 | JLI | SW8260C | |
| 1,4-Dichlorobenzene | ND | | 6.0 | 0.60 | ug/Kg | 1 | 03/04/15 | JLI | SW8260C | |
| 2-Hexanone | ND | | 30 | 6.0 | ug/Kg | 1 | 03/04/15 | JLI | SW8260C | |
| 4-Methyl-2-pentanone | ND | | 30 | 6.0 | ug/Kg | 1 | 03/04/15 | JLI | SW8260C | |
| Acetone | 19 | JBS | 50 | 6.0 | ug/Kg | 1 | 03/04/15 | JLI | SW8260C | B* |
| Benzene | ND | | 6.0 | 0.60 | ug/Kg | 1 | 03/04/15 | JLI | SW8260C | |
| Bromochloromethane | ND | | 6.0 | 0.60 | ug/Kg | 1 | 03/04/15 | JLI | SW8260C | |
| Bromodichloromethane | ND | | 6.0 | 1.2 | ug/Kg | 1 | 03/04/15 | JLI | SW8260C | |
| Bromoform | ND | | 6.0 | 1.2 | ug/Kg | 1 | 03/04/15 | JLI | SW8260C | |
| Bromomethane | ND | | 6.0 | 2.4 | ug/Kg | 1 | 03/04/15 | JLI | SW8260C | |
| Carbon Disulfide | ND | | 6.0 | 1.2 | ug/Kg | 1 | 03/04/15 | JLI | SW8260C | |
| Carbon tetrachloride | ND | | 6.0 | 1.2 | ug/Kg | 1 | 03/04/15 | JLI | SW8260C | |
| Chlorobenzene | ND | | 6.0 | 6.0 | ug/Kg | 1 | 03/04/15 | JLI | SW8260C | |
| Chloroethane | ND | | 6.0 | 0.60 | ug/Kg | 1 | 03/04/15 | JLI | SW8260C | |
| Chloroform | ND | | 6.0 | 0.60 | ug/Kg | 1 | 03/04/15 | JLI | SW8260C | |
| Chloromethane | ND | | 6.0 | 1.2 | ug/Kg | 1 | 03/04/15 | JLI | SW8260C | |
| cis-1,2-Dichloroethene | ND | | 6.0 | 0.60 | ug/Kg | 1 | 03/04/15 | JLI | SW8260C | |
| cis-1,3-Dichloropropene | ND | | 6.0 | 0.60 | ug/Kg | 1 | 03/04/15 | JLI | SW8260C | |

Project ID: 109 MARBLEDALE RD TUCKAHOE NY
Client ID: TB-13 4-6

Phoenix I.D.: BH78390

| Parameter | Result | | RL/ PQL | LOD/ MDL | Units | Dilution | Date/Time | By | Reference |
|---|---|---|---|---|---|---|---|---|---|
| Cyclohexane | ND | | 6.0 | 1.2 | ug/Kg | 1 | 03/04/15 | JLI | SW8260C |
| Dibromochloromethane | ND | | 6.0 | 1.2 | ug/Kg | 1 | 03/04/15 | JLI | SW8260C |
| Dichlorodifluoromethane | ND | | 6.0 | 0.60 | ug/Kg | 1 | 03/04/15 | JLI | SW8260C |
| Ethylbenzene | 0.88 | J | 6.0 | 0.60 | ug/Kg | 1 | 03/04/15 | JLI | SW8260C |
| Isopropylbenzene | 0.60 | J | 6.0 | 0.60 | ug/Kg | 1 | 03/04/15 | JLI | SW8260C |
| m&p-Xylene | 2.7 | J | 6.0 | 1.2 | ug/Kg | 1 | 03/04/15 | JLI | SW8260C |
| Methyl ethyl ketone | ND | | 36 | 6.0 | ug/Kg | 1 | 03/04/15 | JLI | SW8260C |
| Methyl t-butyl ether (MTBE) | ND | | 12 | 1.2 | ug/Kg | 1 | 03/04/15 | JLI | SW8260C |
| Methylacetate | ND | | 6.0 | 3.0 | ug/Kg | 1 | 03/04/15 | JLI | SW8260C |
| Methylcyclohexane | ND | | 6.0 | 1.2 | ug/Kg | 1 | 03/04/15 | JLI | SW8260C |
| Methylene chloride | ND | | 6.0 | 6.0 | ug/Kg | 1 | 03/04/15 | JLI | SW8260C |
| o-Xylene | 1.9 | J | 6.0 | 1.2 | ug/Kg | 1 | 03/04/15 | JLI | SW8260C |
| Styrene | ND | | 6.0 | 0.60 | ug/Kg | 1 | 03/04/15 | JLI | SW8260C |
| Tetrachloroethene | ND | | 6.0 | 1.2 | ug/Kg | 1 | 03/04/15 | JLI | SW8260C |
| Toluene | ND | | 6.0 | 0.60 | ug/Kg | 1 | 03/04/15 | JLI | SW8260C |
| Total Xylenes | ND | | 6.0 | 1.2 | ug/Kg | 1 | 03/04/15 | JLI | SW8260C |
| trans-1,2-Dichloroethene | ND | | 6.0 | 0.60 | ug/Kg | 1 | 03/04/15 | JLI | SW8260C |
| trans-1,3-Dichloropropene | ND | | 6.0 | 0.60 | ug/Kg | 1 | 03/04/15 | JLI | SW8260C |
| Trichloroethene | ND | | 6.0 | 0.60 | ug/Kg | 1 | 03/04/15 | JLI | SW8260C |
| Trichlorofluoromethane | ND | | 6.0 | 1.2 | ug/Kg | 1 | 03/04/15 | JLI | SW8260C |
| Trichlorotrifluoroethane | ND | | 6.0 | 0.60 | ug/Kg | 1 | 03/04/15 | JLI | SW8260C |
| Vinyl chloride | ND | | 6.0 | 0.60 | ug/Kg | 1 | 03/04/15 | JLI | SW8260C |
| **QA/QC Surrogates** | | | | | | | | | |
| % 1,2-dichlorobenzene-d4 | 97 | | | | % | 1 | 03/04/15 | JLI | 70 - 130 % |
| % Bromofluorobenzene | 93 | | | | % | 1 | 03/04/15 | JLI | 70 - 130 % |
| % Dibromofluoromethane | 97 | | | | % | 1 | 03/04/15 | JLI | 70 - 130 % |
| % Toluene-d8 | 94 | | | | % | 1 | 03/04/15 | JLI | 70 - 130 % |

## Semivolatiles

| | | | | | | | | | |
|---|---|---|---|---|---|---|---|---|---|
| 1,1-Biphenyl | ND | | 1400 | 590 | ug/Kg | 5 | 03/04/15 | DD | SW8270D |
| 1,2,4,5-Tetrachlorobenzene | ND | | 1400 | 680 | ug/Kg | 5 | 03/04/15 | DD | SW8270D |
| 2,3,4,6-tetrachlorophenol | ND | | 1400 | 910 | ug/Kg | 5 | 03/04/15 | DD | SW8270D |
| 2,4,5-Trichlorophenol | ND | | 1400 | 1100 | ug/Kg | 5 | 03/04/15 | DD | SW8270D |
| 2,4,6-Trichlorophenol | ND | | 770 | 620 | ug/Kg | 5 | 03/04/15 | DD | SW8270D |
| 2,4-Dichlorophenol | ND | | 770 | 680 | ug/Kg | 5 | 03/04/15 | DD | SW8270D |
| 2,4-Dimethylphenol | ND | | 1400 | 480 | ug/Kg | 5 | 03/04/15 | DD | SW8270D |
| 2,4-Dinitrophenol | ND | | 1400 | 1400 | ug/Kg | 5 | 03/04/15 | DD | SW8270D |
| 2,4-Dinitrotoluene | ND | | 770 | 760 | ug/Kg | 5 | 03/04/15 | DD | SW8270D |
| 2,6-Dinitrotoluene | ND | | 770 | 610 | ug/Kg | 5 | 03/04/15 | DD | SW8270D |
| 2-Chloronaphthalene | ND | | 1400 | 550 | ug/Kg | 5 | 03/04/15 | DD | SW8270D |
| 2-Chlorophenol | ND | | 1400 | 550 | ug/Kg | 5 | 03/04/15 | DD | SW8270D |
| 2-Methylnaphthalene | ND | | 1400 | 580 | ug/Kg | 5 | 03/04/15 | DD | SW8270D |
| 2-Methylphenol (o-cresol) | ND | | 1400 | 910 | ug/Kg | 5 | 03/04/15 | DD | SW8270D |
| 2-Nitroaniline | ND | | 9700 | 2000 | ug/Kg | 5 | 03/04/15 | DD | SW8270D |
| 2-Nitrophenol | ND | | 1400 | 1200 | ug/Kg | 5 | 03/04/15 | DD | SW8270D |
| 3&4-Methylphenol (m&p-cresol) | ND | | 1400 | 760 | ug/Kg | 5 | 03/04/15 | DD | SW8270D |
| 3,3'-Dichlorobenzidine | ND | | 770 | 770 | ug/Kg | 5 | 03/04/15 | DD | SW8270D |
| 3-Nitroaniline | ND | | 9700 | 4200 | ug/Kg | 5 | 03/04/15 | DD | SW8270D |
| 4,6-Dinitro-2-methylphenol | ND | | 1400 | 1400 | ug/Kg | 5 | 03/04/15 | DD | SW8270D |
| 4-Bromophenyl phenyl ether | ND | | 1400 | 570 | ug/Kg | 5 | 03/04/15 | DD | SW8270D |

Project ID: 109 MARBLEDALE RD TUCKAHOE NY
Client ID: TB-13 4-6

Phoenix I.D.: BH78390

| Parameter | Result | | RL/ PQL | LOD/ MDL | Units | Dilution | Date/Time | By | Reference | |
|---|---|---|---|---|---|---|---|---|---|---|
| 4-Chloro-3-methylphenol | ND | | 1400 | 680 | ug/Kg | 5 | 03/04/15 | DD | SW8270D | |
| 4-Chloroaniline | ND | | 3900 | 900 | ug/Kg | 5 | 03/04/15 | DD | SW8270D | |
| 4-Chlorophenyl phenyl ether | ND | | 1400 | 650 | ug/Kg | 5 | 03/04/15 | DD | SW8270D | |
| 4-Nitroaniline | ND | | 9700 | 650 | ug/Kg | 5 | 03/04/15 | DD | SW8270D | |
| 4-Nitrophenol | ND | | 9700 | 870 | ug/Kg | 5 | 03/04/15 | DD | SW8270D | |
| Acenaphthene | 630 | J | 1400 | 590 | ug/Kg | 5 | 03/04/15 | DD | SW8270D | |
| Acenaphthylene | ND | | 770 | 540 | ug/Kg | 5 | 03/04/15 | DD | SW8270D | |
| Acetophenone | ND | | 1400 | 600 | ug/Kg | 5 | 03/04/15 | DD | SW8270D | |
| Anthracene | 2200 | | 1400 | 630 | ug/Kg | 5 | 03/04/15 | DD | SW8270D | |
| Atrazine | ND | | 770 | 770 | ug/Kg | 5 | 03/04/15 | DD | SW8270D | |
| Benz(a)anthracene | 5900 | | 1400 | 650 | ug/Kg | 5 | 03/04/15 | DD | SW8270D | |
| Benzaldehyde | ND | | 1400 | 570 | ug/Kg | 5 | 03/04/15 | DD | SW8270D | |
| Benzo(a)pyrene | 5200 | | 770 | 630 | ug/Kg | 5 | 03/04/15 | DD | SW8270D | |
| Benzo(b)fluoranthene | 6400 | | 1400 | 660 | ug/Kg | 5 | 03/04/15 | DD | SW8270D | |
| Benzo(ghi)perylene | 1900 | | 1400 | 630 | ug/Kg | 5 | 03/04/15 | DD | SW8270D | |
| Benzo(k)fluoranthene | 2200 | | 1400 | 640 | ug/Kg | 5 | 03/04/15 | DD | SW8270D | |
| Benzyl butyl phthalate | ND | | 1400 | 500 | ug/Kg | 5 | 03/04/15 | DD | SW8270D | |
| Bis(2-chloroethoxy)methane | ND | | 1400 | 530 | ug/Kg | 5 | 03/04/15 | DD | SW8270D | |
| Bis(2-chloroethyl)ether | ND | | 770 | 520 | ug/Kg | 5 | 03/04/15 | DD | SW8270D | |
| Bis(2-chloroisopropyl)ether | ND | | 1400 | 540 | ug/Kg | 5 | 03/04/15 | DD | SW8270D | 1 |
| Bis(2-ethylhexyl)phthalate | ND | | 1400 | 560 | ug/Kg | 5 | 03/04/15 | DD | SW8270D | |
| Caprolactam | ND | | 1400 | 1400 | ug/Kg | 5 | 03/04/15 | DD | SW8270D | |
| Carbazole | ND | | 9700 | 1500 | ug/Kg | 5 | 03/04/15 | DD | SW8270D | |
| Chrysene | 5600 | | 1400 | 650 | ug/Kg | 5 | 03/04/15 | DD | SW8270D | |
| Dibenz(a,h)anthracene | ND | | 770 | 630 | ug/Kg | 5 | 03/04/15 | DD | SW8270D | |
| Dibenzofuran | ND | | 1400 | 570 | ug/Kg | 5 | 03/04/15 | DD | SW8270D | |
| Diethyl phthalate | ND | | 1400 | 610 | ug/Kg | 5 | 03/04/15 | DD | SW8270D | |
| Dimethylphthalate | ND | | 1400 | 600 | ug/Kg | 5 | 03/04/15 | DD | SW8270D | |
| Di-n-butylphthalate | ND | | 1400 | 510 | ug/Kg | 5 | 03/04/15 | DD | SW8270D | |
| Di-n-octylphthalate | ND | | 1400 | 500 | ug/Kg | 5 | 03/04/15 | DD | SW8270D | |
| Fluoranthene | 9200 | | 1400 | 630 | ug/Kg | 5 | 03/04/15 | DD | SW8270D | |
| Fluorene | 760 | J | 1400 | 640 | ug/Kg | 5 | 03/04/15 | DD | SW8270D | |
| Hexachlorobenzene | ND | | 770 | 570 | ug/Kg | 5 | 03/04/15 | DD | SW8270D | |
| Hexachlorobutadiene | ND | | 1400 | 700 | ug/Kg | 5 | 03/04/15 | DD | SW8270D | |
| Hexachlorocyclopentadiene | ND | | 1400 | 590 | ug/Kg | 5 | 03/04/15 | DD | SW8270D | |
| Hexachloroethane | ND | | 770 | 580 | ug/Kg | 5 | 03/04/15 | DD | SW8270D | |
| Indeno(1,2,3-cd)pyrene | 1900 | | 1400 | 640 | ug/Kg | 5 | 03/04/15 | DD | SW8270D | |
| Isophorone | ND | | 770 | 540 | ug/Kg | 5 | 03/04/15 | DD | SW8270D | |
| Naphthalene | ND | | 1400 | 560 | ug/Kg | 5 | 03/04/15 | DD | SW8270D | |
| Nitrobenzene | ND | | 770 | 680 | ug/Kg | 5 | 03/04/15 | DD | SW8270D | |
| N-Nitrosodimethylamine | ND | | 1400 | 550 | ug/Kg | 5 | 03/04/15 | DD | SW8270D | |
| N-Nitrosodi-n-propylamine | ND | | 770 | 630 | ug/Kg | 5 | 03/04/15 | DD | SW8270D | |
| N-Nitrosodiphenylamine | ND | | 770 | 740 | ug/Kg | 5 | 03/04/15 | DD | SW8270D | |
| Pentachlorophenol | ND | | 1400 | 730 | ug/Kg | 5 | 03/04/15 | DD | SW8270D | |
| Phenanthrene | 7000 | | 770 | 550 | ug/Kg | 5 | 03/04/15 | DD | SW8270D | |
| Phenol | ND | | 1400 | 620 | ug/Kg | 5 | 03/04/15 | DD | SW8270D | |
| Pyrene | 7400 | | 1400 | 670 | ug/Kg | 5 | 03/04/15 | DD | SW8270D | |
| **QA/QC Surrogates** | | | | | | | | | | |
| % 2,4,6-Tribromophenol | 96 | | | | % | 5 | 03/04/15 | DD | 19 - 122 % | |

Project ID: 109 MARBLEDALE RD TUCKAHOE NY
Client ID: TB-13 4-6

Phoenix I.D.: BH78390

| Parameter | Result | RL/ PQL | LOD/ MDL | Units | Dilution | Date/Time | By | Reference |
|---|---|---|---|---|---|---|---|---|
| % 2-Fluorobiphenyl | 79 | | | % | 5 | 03/04/15 | DD | 30 - 115 % |
| % 2-Fluorophenol | 73 | | | % | 5 | 03/04/15 | DD | 25 - 121 % |
| % Nitrobenzene-d5 | 78 | | | % | 5 | 03/04/15 | DD | 23 - 120 % |
| % Phenol-d5 | 74 | | | % | 5 | 03/04/15 | DD | 24 - 113 % |
| % Terphenyl-d14 | 65 | | | % | 5 | 03/04/15 | DD | 18 - 137 % |

1 = This parameter is not certified by NY NELAC for this matrix. NY NELAC does not offer certification for all parameters at this time.
B* = Present in blank, a bias is possible.

**RL/PQL=Reporting/Practical Quantitation Level (Equivalent to NELAC LOQ, Limit of Quanitation) ND=Not Detected**
**BRL=Below Reporting Level J=Estimated Below RL LOD=Limit of Detection MDL=Method Detection Limit**

## Comments:

Please be advised that the NY 375 soil criteria for chromium are based on hexavalent chromium and trivalent chromium.

All soils, solids and sludges are reported on a dry weight basis unless otherwise noted in the sample comments.

If there are any questions regarding this data, please call Phoenix Client Services at extension 200.
This report must not be reproduced except in full as defined by the attached chain of custody.

**Phyllis Shiller, Laboratory Director**
**April 29, 2015**
**Reviewed and Released by: Tina Covensky**

PHOENIX

Environmental Laboratories, Inc.
587 East Middle Turnpike, P.O.Box 370, Manchester, CT 06045
Tel. (860) 645-1102 Fax (860) 645-0823

ACCREDITED IN ACCORDANCE WITH nelac NY # 11301

# Analysis Report

April 29, 2015

FOR: Attn: Mr. Tim Carr
HydroEnvironmental Solutions, Inc.
One Deans Bridge Rd
Somers NY 10589

| Sample Information | | Custody Information | | Date | Time |
|---|---|---|---|---|---|
| Matrix: | SOLID | Collected by: | RG | 02/26/15 | |
| Location Code: | HESNY-TUCK | Received by: | SW | 03/02/15 | 15:48 |
| Rush Request: | 72 Hour | Analyzed by: | see "By" below | | |
| P.O.#: | | | | | |

## Laboratory Data

SDG ID: GBH78390
Phoenix ID: BH78391

Project ID: 109 MARBLEDALE RD TUCKAHOE NY
Client ID: TB-13 26-28

| Parameter | Result | | RL/ PQL | LOD/ MDL | Units | Dilution | Date/Time | By | Reference |
|---|---|---|---|---|---|---|---|---|---|
| Silver | < 0.37 | | 0.37 | 0.37 | mg/Kg | 1 | 03/03/15 | EK | SW6010C |
| Aluminum | 10400 | | 37 | 7.4 | mg/Kg | 10 | 03/03/15 | LK | SW6010C |
| Arsenic | 1.2 | | 0.7 | 0.74 | mg/Kg | 1 | 03/03/15 | EK | SW6010C |
| Barium | 77.7 | | 0.7 | 0.37 | mg/Kg | 1 | 03/03/15 | LK | SW6010C |
| Beryllium | 0.31 | | 0.30 | 0.15 | mg/Kg | 1 | 03/03/15 | EK | SW6010C |
| Calcium | 15200 | N | 37 | 34 | mg/Kg | 10 | 03/03/15 | LK | SW6010C |
| Cadmium | < 0.37 | | 0.37 | 0.15 | mg/Kg | 1 | 03/03/15 | EK | SW6010C |
| Cobalt | 9.14 | | 0.37 | 0.37 | mg/Kg | 1 | 03/03/15 | EK | SW6010C |
| Chromium | 31.4 | | 0.37 | 0.37 | mg/Kg | 1 | 03/03/15 | EK | SW6010C |
| Copper | 20.3 | | 0.37 | 0.37 | mg/kg | 1 | 03/03/15 | EK | SW6010C |
| Iron | 16400 | | 37 | 37 | mg/Kg | 10 | 03/03/15 | LK | SW6010C |
| Mercury | < 0.03 | | 0.03 | 0.02 | mg/Kg | 1 | 03/03/15 | MA | SW7471B |
| Potassium | 2650 | N | 7 | 2.9 | mg/Kg | 1 | 03/03/15 | LK | SW6010C |
| Magnesium | 7560 | | 37 | 37 | mg/Kg | 10 | 03/03/15 | LK | SW6010C |
| Manganese | 302 | | 3.7 | 3.7 | mg/Kg | 10 | 03/03/15 | EK | SW6010C |
| Sodium | 198 | N | 7 | 3.2 | mg/Kg | 1 | 03/03/15 | LK | SW6010C |
| Nickel | 20.8 | | 0.37 | 0.37 | mg/Kg | 1 | 03/03/15 | EK | SW6010C |
| Lead | 11.8 | | 0.7 | 0.37 | mg/Kg | 1 | 03/03/15 | LK | SW6010C |
| Antimony | < 1.9 | | 1.9 | 1.9 | mg/Kg | 1 | 03/03/15 | LK | SW6010C |
| Selenium | < 1.5 | | 1.5 | 1.3 | mg/Kg | 1 | 03/03/15 | LK | SW6010C |
| Thallium | < 1.5 | | 1.5 | 1.5 | mg/Kg | 1 | 03/03/15 | LK | SW6010C |
| Vanadium | 31.1 | | 0.4 | 0.37 | mg/Kg | 1 | 03/03/15 | LK | SW6010C |
| Zinc | 58.8 | | 0.7 | 0.37 | mg/Kg | 1 | 03/03/15 | LK | SW6010C |
| Percent Solid | 80 | | | | % | | 03/02/15 | i | SW846-%Solid |
| Total Cyanide | < 0.57 | | 0.57 | 0.28 | mg/Kg | 1 | 03/04/15 | O/B/E | SW9012B |
| Soil Extraction for PCB | Completed | | | | | | 03/02/15 | CC/H | SW3545A |
| Soil Extraction for SVOA | Completed | | | | | | 03/02/15 | CJ/VH | SW3545A |
| Mercury Digestion | Completed | | | | | | 03/03/15 | I/I | SW7471B |

Project ID: 109 MARBLEDALE RD TUCKAHOE NY
Client ID: TB-13 26-28

Phoenix I.D.: BH78391

| Parameter | Result | | RL/ PQL | LOD/ MDL | Units | Dilution | Date/Time | By | Reference | |
|---|---|---|---|---|---|---|---|---|---|---|
| Total Metals Digest | Completed | | | | | | 03/02/15 | CB/AG | SW3050B | |
| **Polychlorinated Biphenyls** | | | | | | | | | | |
| PCB-1016 | ND | | 82 | 82 | ug/Kg | 2 | 03/03/15 | AW | SW8082A | |
| PCB-1221 | ND | | 82 | 82 | ug/Kg | 2 | 03/03/15 | AW | SW8082A | |
| PCB-1232 | ND | | 82 | 82 | ug/Kg | 2 | 03/03/15 | AW | SW8082A | |
| PCB-1242 | ND | | 82 | 82 | ug/Kg | 2 | 03/03/15 | AW | SW8082A | |
| PCB-1248 | ND | | 82 | 82 | ug/Kg | 2 | 03/03/15 | AW | SW8082A | |
| PCB-1254 | ND | | 82 | 82 | ug/Kg | 2 | 03/03/15 | AW | SW8082A | |
| PCB-1260 | ND | | 82 | 82 | ug/Kg | 2 | 03/03/15 | AW | SW8082A | |
| PCB-1262 | ND | | 82 | 82 | ug/Kg | 2 | 03/03/15 | AW | SW8082A | |
| PCB-1268 | ND | | 82 | 82 | ug/Kg | 2 | 03/03/15 | AW | SW8082A | |
| **QA/QC Surrogates** | | | | | | | | | | |
| % DCBP | 61 | | | | % | 2 | 03/03/15 | AW | 30 - 150 % | |
| % TCMX | 66 | | | | % | 2 | 03/03/15 | AW | 30 - 150 % | |
| **1,4-dioxane** | | | | | | | | | | |
| 1,4-dioxane | ND | | 110 | 43 | ug/kg | 1 | 03/04/15 | JLI | SW8260C | |
| **Volatiles** | | | | | | | | | | |
| 1,1,1-Trichloroethane | ND | | 5.3 | 0.53 | ug/Kg | 1 | 03/04/15 | JLI | SW8260C | |
| 1,1,2,2-Tetrachloroethane | ND | | 5.3 | 1.1 | ug/Kg | 1 | 03/04/15 | JLI | SW8260C | |
| 1,1,2-Trichloroethane | ND | | 5.3 | 1.1 | ug/Kg | 1 | 03/04/15 | JLI | SW8260C | |
| 1,1-Dichloroethane | ND | | 5.3 | 1.1 | ug/Kg | 1 | 03/04/15 | JLI | SW8260C | |
| 1,1-Dichloroethene | ND | | 5.3 | 0.53 | ug/Kg | 1 | 03/04/15 | JLI | SW8260C | |
| 1,2,3-Trichlorobenzene | ND | | 5.3 | 1.1 | ug/Kg | 1 | 03/04/15 | JLI | SW8260C | |
| 1,2,4-Trichlorobenzene | ND | | 5.3 | 1.1 | ug/Kg | 1 | 03/04/15 | JLI | SW8260C | |
| 1,2-Dibromo-3-chloropropane | ND | | 5.3 | 1.1 | ug/Kg | 1 | 03/04/15 | JLI | SW8260C | |
| 1,2-Dibromoethane | ND | | 5.3 | 0.53 | ug/Kg | 1 | 03/04/15 | JLI | SW8260C | |
| 1,2-Dichlorobenzene | ND | | 5.3 | 0.53 | ug/Kg | 1 | 03/04/15 | JLI | SW8260C | |
| 1,2-Dichloroethane | ND | | 5.3 | 0.53 | ug/Kg | 1 | 03/04/15 | JLI | SW8260C | |
| 1,2-Dichloropropane | ND | | 5.3 | 1.1 | ug/Kg | 1 | 03/04/15 | JLI | SW8260C | |
| 1,3-Dichlorobenzene | ND | | 5.3 | 0.53 | ug/Kg | 1 | 03/04/15 | JLI | SW8260C | |
| 1,4-Dichlorobenzene | ND | | 5.3 | 0.53 | ug/Kg | 1 | 03/04/15 | JLI | SW8260C | |
| 2-Hexanone | ND | | 27 | 5.3 | ug/Kg | 1 | 03/04/15 | JLI | SW8260C | |
| 4-Methyl-2-pentanone | ND | | 27 | 5.3 | ug/Kg | 1 | 03/04/15 | JLI | SW8260C | |
| Acetone | 200 | BS | 53 | 5.3 | ug/Kg | 1 | 03/04/15 | JLI | SW8260C | B |
| Benzene | 0.57 | J | 5.3 | 0.53 | ug/Kg | 1 | 03/04/15 | JLI | SW8260C | |
| Bromochloromethane | ND | | 5.3 | 0.53 | ug/Kg | 1 | 03/04/15 | JLI | SW8260C | |
| Bromodichloromethane | ND | | 5.3 | 1.1 | ug/Kg | 1 | 03/04/15 | JLI | SW8260C | |
| Bromoform | ND | | 5.3 | 1.1 | ug/Kg | 1 | 03/04/15 | JLI | SW8260C | |
| Bromomethane | ND | | 5.3 | 2.1 | ug/Kg | 1 | 03/04/15 | JLI | SW8260C | |
| Carbon Disulfide | 6.9 | | 5.3 | 1.1 | ug/Kg | 1 | 03/04/15 | JLI | SW8260C | |
| Carbon tetrachloride | ND | | 5.3 | 1.1 | ug/Kg | 1 | 03/04/15 | JLI | SW8260C | |
| Chlorobenzene | ND | | 5.3 | 5.3 | ug/Kg | 1 | 03/04/15 | JLI | SW8260C | |
| Chloroethane | ND | | 5.3 | 0.53 | ug/Kg | 1 | 03/04/15 | JLI | SW8260C | |
| Chloroform | ND | | 5.3 | 0.53 | ug/Kg | 1 | 03/04/15 | JLI | SW8260C | |
| Chloromethane | ND | | 5.3 | 1.1 | ug/Kg | 1 | 03/04/15 | JLI | SW8260C | |
| cis-1,2-Dichloroethene | ND | | 5.3 | 0.53 | ug/Kg | 1 | 03/04/15 | JLI | SW8260C | |
| cis-1,3-Dichloropropene | ND | | 5.3 | 0.53 | ug/Kg | 1 | 03/04/15 | JLI | SW8260C | |

Project ID: 109 MARBLEDALE RD TUCKAHOE NY
Client ID: TB-13 26-28

Phoenix I.D.: BH78391

| Parameter | Result | | RL/ PQL | LOD/ MDL | Units | Dilution | Date/Time | By | Reference | |
|---|---|---|---|---|---|---|---|---|---|---|
| Cyclohexane | ND | | 5.3 | 1.1 | ug/Kg | 1 | 03/04/15 | JLI | SW8260C | |
| Dibromochloromethane | ND | | 5.3 | 1.1 | ug/Kg | 1 | 03/04/15 | JLI | SW8260C | |
| Dichlorodifluoromethane | 130 | | 5.3 | 0.53 | ug/Kg | 1 | 03/04/15 | JLI | SW8260C | |
| Ethylbenzene | ND | | 5.3 | 0.53 | ug/Kg | 1 | 03/04/15 | JLI | SW8260C | |
| Isopropylbenzene | ND | | 5.3 | 0.53 | ug/Kg | 1 | 03/04/15 | JLI | SW8260C | |
| m&p-Xylene | ND | | 5.3 | 1.1 | ug/Kg | 1 | 03/04/15 | JLI | SW8260C | |
| Methyl ethyl ketone | 15 | J | 32 | 5.3 | ug/Kg | 1 | 03/04/15 | JLI | SW8260C | |
| Methyl t-butyl ether (MTBE) | ND | | 11 | 1.1 | ug/Kg | 1 | 03/04/15 | JLI | SW8260C | |
| Methylacetate | ND | | 5.3 | 2.7 | ug/Kg | 1 | 03/04/15 | JLI | SW8260C | |
| Methylcyclohexane | ND | | 5.3 | 1.1 | ug/Kg | 1 | 03/04/15 | JLI | SW8260C | |
| Methylene chloride | ND | | 5.3 | 5.3 | ug/Kg | 1 | 03/04/15 | JLI | SW8260C | |
| o-Xylene | ND | | 5.3 | 1.1 | ug/Kg | 1 | 03/04/15 | JLI | SW8260C | |
| Styrene | ND | | 5.3 | 0.53 | ug/Kg | 1 | 03/04/15 | JLI | SW8260C | |
| Tetrachloroethene | ND | | 5.3 | 1.1 | ug/Kg | 1 | 03/04/15 | JLI | SW8260C | |
| Toluene | 0.67 | J | 5.3 | 0.53 | ug/Kg | 1 | 03/04/15 | JLI | SW8260C | |
| Total Xylenes | ND | | 5.3 | 1.1 | ug/Kg | 1 | 03/04/15 | JLI | SW8260C | |
| trans-1,2-Dichloroethene | ND | | 5.3 | 0.53 | ug/Kg | 1 | 03/04/15 | JLI | SW8260C | |
| trans-1,3-Dichloropropene | ND | | 5.3 | 0.53 | ug/Kg | 1 | 03/04/15 | JLI | SW8260C | |
| Trichloroethene | ND | | 5.3 | 0.53 | ug/Kg | 1 | 03/04/15 | JLI | SW8260C | |
| Trichlorofluoromethane | ND | | 5.3 | 1.1 | ug/Kg | 1 | 03/04/15 | JLI | SW8260C | |
| Trichlorotrifluoroethane | ND | | 5.3 | 0.53 | ug/Kg | 1 | 03/04/15 | JLI | SW8260C | |
| Vinyl chloride | ND | | 5.3 | 0.53 | ug/Kg | 1 | 03/04/15 | JLI | SW8260C | |
| **QA/QC Surrogates** | | | | | | | | | | |
| % 1,2-dichlorobenzene-d4 | 100 | | | | % | 1 | 03/04/15 | JLI | 70 - 130 % | |
| % Bromofluorobenzene | 95 | | | | % | 1 | 03/04/15 | JLI | 70 - 130 % | |
| % Dibromofluoromethane | 51 | | | | % | 1 | 03/04/15 | JLI | 70 - 130 % | 3 |
| % Toluene-d8 | 97 | | | | % | 1 | 03/04/15 | JLI | 70 - 130 % | |

## Semivolatiles

| | | | | | | | | | |
|---|---|---|---|---|---|---|---|---|---|
| 1,1-Biphenyl | ND | | 280 | 120 | ug/Kg | 1 | 03/03/15 | DD | SW8270D |
| 1,2,4,5-Tetrachlorobenzene | ND | | 280 | 140 | ug/Kg | 1 | 03/03/15 | DD | SW8270D |
| 2,3,4,6-tetrachlorophenol | ND | | 280 | 190 | ug/Kg | 1 | 03/03/15 | DD | SW8270D |
| 2,4,5-Trichlorophenol | ND | | 280 | 220 | ug/Kg | 1 | 03/03/15 | DD | SW8270D |
| 2,4,6-Trichlorophenol | ND | | 160 | 130 | ug/Kg | 1 | 03/03/15 | DD | SW8270D |
| 2,4-Dichlorophenol | ND | | 160 | 140 | ug/Kg | 1 | 03/03/15 | DD | SW8270D |
| 2,4-Dimethylphenol | ND | | 280 | 100 | ug/Kg | 1 | 03/03/15 | DD | SW8270D |
| 2,4-Dinitrophenol | ND | | 280 | 280 | ug/Kg | 1 | 03/03/15 | DD | SW8270D |
| 2,4-Dinitrotoluene | ND | | 160 | 160 | ug/Kg | 1 | 03/03/15 | DD | SW8270D |
| 2,6-Dinitrotoluene | ND | | 160 | 130 | ug/Kg | 1 | 03/03/15 | DD | SW8270D |
| 2-Chloronaphthalene | ND | | 280 | 120 | ug/Kg | 1 | 03/03/15 | DD | SW8270D |
| 2-Chlorophenol | ND | | 280 | 120 | ug/Kg | 1 | 03/03/15 | DD | SW8270D |
| 2-Methylnaphthalene | ND | | 280 | 120 | ug/Kg | 1 | 03/03/15 | DD | SW8270D |
| 2-Methylphenol (o-cresol) | ND | | 280 | 190 | ug/Kg | 1 | 03/03/15 | DD | SW8270D |
| 2-Nitroaniline | ND | | 2000 | 410 | ug/Kg | 1 | 03/03/15 | DD | SW8270D |
| 2-Nitrophenol | ND | | 280 | 260 | ug/Kg | 1 | 03/03/15 | DD | SW8270D |
| 3&4-Methylphenol (m&p-cresol) | ND | | 280 | 160 | ug/Kg | 1 | 03/03/15 | DD | SW8270D |
| 3,3'-Dichlorobenzidine | ND | | 160 | 160 | ug/Kg | 1 | 03/03/15 | DD | SW8270D |
| 3-Nitroaniline | ND | | 2000 | 880 | ug/Kg | 1 | 03/03/15 | DD | SW8270D |
| 4,6-Dinitro-2-methylphenol | ND | | 280 | 280 | ug/Kg | 1 | 03/03/15 | DD | SW8270D |
| 4-Bromophenyl phenyl ether | ND | | 280 | 120 | ug/Kg | 1 | 03/03/15 | DD | SW8270D |

Project ID: 109 MARBLEDALE RD TUCKAHOE NY
Client ID: TB-13 26-28

Phoenix I.D.: BH78391

| Parameter | Result | | RL/ PQL | LOD/ MDL | Units | Dilution | Date/Time | By | Reference | |
|---|---|---|---|---|---|---|---|---|---|---|
| 4-Chloro-3-methylphenol | ND | | 280 | 140 | ug/Kg | 1 | 03/03/15 | DD | SW8270D | |
| 4-Chloroaniline | ND | | 810 | 190 | ug/Kg | 1 | 03/03/15 | DD | SW8270D | |
| 4-Chlorophenyl phenyl ether | ND | | 280 | 140 | ug/Kg | 1 | 03/03/15 | DD | SW8270D | |
| 4-Nitroaniline | ND | | 2000 | 140 | ug/Kg | 1 | 03/03/15 | DD | SW8270D | |
| 4-Nitrophenol | ND | | 2000 | 180 | ug/Kg | 1 | 03/03/15 | DD | SW8270D | |
| Acenaphthene | ND | | 280 | 120 | ug/Kg | 1 | 03/03/15 | DD | SW8270D | |
| Acenaphthylene | ND | | 160 | 110 | ug/Kg | 1 | 03/03/15 | DD | SW8270D | |
| Acetophenone | ND | | 280 | 130 | ug/Kg | 1 | 03/03/15 | DD | SW8270D | |
| Anthracene | ND | | 280 | 130 | ug/Kg | 1 | 03/03/15 | DD | SW8270D | |
| Atrazine | ND | | 160 | 160 | ug/Kg | 1 | 03/03/15 | DD | SW8270D | |
| Benz(a)anthracene | 180 | J | 280 | 140 | ug/Kg | 1 | 03/03/15 | DD | SW8270D | |
| Benzaldehyde | ND | | 280 | 120 | ug/Kg | 1 | 03/03/15 | DD | SW8270D | |
| Benzo(a)pyrene | 150 | J | 160 | 130 | ug/Kg | 1 | 03/03/15 | DD | SW8270D | |
| Benzo(b)fluoranthene | 200 | J | 280 | 140 | ug/Kg | 1 | 03/03/15 | DD | SW8270D | |
| Benzo(ghi)perylene | ND | | 280 | 130 | ug/Kg | 1 | 03/03/15 | DD | SW8270D | |
| Benzo(k)fluoranthene | ND | | 280 | 130 | ug/Kg | 1 | 03/03/15 | DD | SW8270D | |
| Benzyl butyl phthalate | ND | | 280 | 100 | ug/Kg | 1 | 03/03/15 | DD | SW8270D | |
| Bis(2-chloroethoxy)methane | ND | | 280 | 110 | ug/Kg | 1 | 03/03/15 | DD | SW8270D | |
| Bis(2-chloroethyl)ether | ND | | 160 | 110 | ug/Kg | 1 | 03/03/15 | DD | SW8270D | |
| Bis(2-chloroisopropyl)ether | ND | | 280 | 110 | ug/Kg | 1 | 03/03/15 | DD | SW8270D | 1 |
| Bis(2-ethylhexyl)phthalate | 220 | J | 280 | 120 | ug/Kg | 1 | 03/03/15 | DD | SW8270D | |
| Caprolactam | ND | | 280 | 280 | ug/Kg | 1 | 03/03/15 | DD | SW8270D | |
| Carbazole | ND | | 2000 | 310 | ug/Kg | 1 | 03/03/15 | DD | SW8270D | |
| Chrysene | 180 | J | 280 | 140 | ug/Kg | 1 | 03/03/15 | DD | SW8270D | |
| Dibenz(a,h)anthracene | ND | | 160 | 130 | ug/Kg | 1 | 03/03/15 | DD | SW8270D | |
| Dibenzofuran | ND | | 280 | 120 | ug/Kg | 1 | 03/03/15 | DD | SW8270D | |
| Diethyl phthalate | ND | | 280 | 130 | ug/Kg | 1 | 03/03/15 | DD | SW8270D | |
| Dimethylphthalate | ND | | 280 | 130 | ug/Kg | 1 | 03/03/15 | DD | SW8270D | |
| Di-n-butylphthalate | ND | | 280 | 110 | ug/Kg | 1 | 03/03/15 | DD | SW8270D | |
| Di-n-octylphthalate | ND | | 280 | 100 | ug/Kg | 1 | 03/03/15 | DD | SW8270D | |
| Fluoranthene | 450 | | 280 | 130 | ug/Kg | 1 | 03/03/15 | DD | SW8270D | |
| Fluorene | ND | | 280 | 130 | ug/Kg | 1 | 03/03/15 | DD | SW8270D | |
| Hexachlorobenzene | ND | | 160 | 120 | ug/Kg | 1 | 03/03/15 | DD | SW8270D | |
| Hexachlorobutadiene | ND | | 280 | 150 | ug/Kg | 1 | 03/03/15 | DD | SW8270D | |
| Hexachlorocyclopentadiene | ND | | 280 | 120 | ug/Kg | 1 | 03/03/15 | DD | SW8270D | |
| Hexachloroethane | ND | | 160 | 120 | ug/Kg | 1 | 03/03/15 | DD | SW8270D | |
| Indeno(1,2,3-cd)pyrene | ND | | 280 | 130 | ug/Kg | 1 | 03/03/15 | DD | SW8270D | |
| Isophorone | ND | | 160 | 110 | ug/Kg | 1 | 03/03/15 | DD | SW8270D | |
| Naphthalene | ND | | 280 | 120 | ug/Kg | 1 | 03/03/15 | DD | SW8270D | |
| Nitrobenzene | ND | | 160 | 140 | ug/Kg | 1 | 03/03/15 | DD | SW8270D | |
| N-Nitrosodimethylamine | ND | | 280 | 110 | ug/Kg | 1 | 03/03/15 | DD | SW8270D | |
| N-Nitrosodi-n-propylamine | ND | | 160 | 130 | ug/Kg | 1 | 03/03/15 | DD | SW8270D | |
| N-Nitrosodiphenylamine | ND | | 160 | 160 | ug/Kg | 1 | 03/03/15 | DD | SW8270D | |
| Pentachlorophenol | ND | | 280 | 150 | ug/Kg | 1 | 03/03/15 | DD | SW8270D | |
| Phenanthrene | 330 | | 160 | 120 | ug/Kg | 1 | 03/03/15 | DD | SW8270D | |
| Phenol | ND | | 280 | 130 | ug/Kg | 1 | 03/03/15 | DD | SW8270D | |
| Pyrene | 410 | | 280 | 140 | ug/Kg | 1 | 03/03/15 | DD | SW8270D | |
| **QA/QC Surrogates** | | | | | | | | | | |
| % 2,4,6-Tribromophenol | 89 | | | | % | 1 | 03/03/15 | DD | 19 - 122 % | |

Project ID: 109 MARBLEDALE RD TUCKAHOE NY
Client ID: TB-13 26-28

Phoenix I.D.: BH78391

| Parameter | Result | RL/ PQL | LOD/ MDL | Units | Dilution | Date/Time | By | Reference |
|---|---|---|---|---|---|---|---|---|
| % 2-Fluorobiphenyl | 83 | | | % | 1 | 03/03/15 | DD | 30 - 115 % |
| % 2-Fluorophenol | 72 | | | % | 1 | 03/03/15 | DD | 25 - 121 % |
| % Nitrobenzene-d5 | 75 | | | % | 1 | 03/03/15 | DD | 23 - 120 % |
| % Phenol-d5 | 77 | | | % | 1 | 03/03/15 | DD | 24 - 113 % |
| % Terphenyl-d14 | 114 | | | % | 1 | 03/03/15 | DD | 18 - 137 % |

1 = This parameter is not certified by NY NELAC for this matrix. NY NELAC does not offer certification for all parameters at this time.
3 = This parameter exceeds laboratory specified limits.
B = Present in blank, no bias suspected.

**RL/PQL=Reporting/Practical Quantitation Level (Equivalent to NELAC LOQ, Limit of Quanitation) ND=Not Detected**
**BRL=Below Reporting Level J=Estimated Below RL LOD=Limit of Detection MDL=Method Detection Limit**

## Comments:

Please be advised that the NY 375 soil criteria for chromium are based on hexavalent chromium and trivalent chromium.

Volatile Comment:

**Surrogate recoveries were outside control limits for volatiles due to matrix interference.

All soils, solids and sludges are reported on a dry weight basis unless otherwise noted in the sample comments.

If there are any questions regarding this data, please call Phoenix Client Services at extension 200.
This report must not be reproduced except in full as defined by the attached chain of custody.

**Phyllis Shiller, Laboratory Director**
**April 29, 2015**
**Reviewed and Released by: Tina Covensky**

1F
SEMIVOLATILE ORGANICS ANALYSIS DATA SHEET
TENTATIVELY IDENTIFIED COMPOUNDS

CLIENT ID
TB-13 4-6

Lab Name: Phoenix Environmental Labs  Client: HESNY-TUCK

Lab Code: Phoenix  Case No.:  SAS No.:  SDG No.: GBH78390

Matrix:(soil/water) SOIL  Lab Sample ID: BH78390

Sample wt/vol: 15.38 (g/mL) g  Lab File ID: 0304_20.D

Level: (low/med) Low  Date Received: 03/02/15

% Moisture: not dec. 16 decanted:(Y/N) NA  Date Extracted: 03/04/15

GPC Cleanup (Y/N): N pH: NA  Date Analyzed: 3/4/2015

Conc. Extract Volume: 1000 (uL)  Dilution Factor 5

Injection Volume: 2 (uL)

Number TICs found: 3  CONCENTRATION UNITS: (ug/L or ug/KG) ug/Kg

| CAS NUMBER | COMPOUND NAME | RT | EST. CONC. | Q |
|---|---|---|---|---|
| 000123-42-2 | 2-Pentanone, 4-hydroxy-4-methyl- | 3.670 | 2900 | JNA |
| 000203-64-5 | 4H-Cyclopenta[def]phenanthrene | 13.780 | 1700 | JN |
| 000205-82-3 | Benzo[j]fluoranthene | 19.900 | 3200 | JN |

1F
SEMIVOLATILE ORGANICS ANALYSIS DATA SHEET
TENTATIVELY IDENTIFIED COMPOUNDS

CLIENT ID
TB-13 26-28

Lab Name: Phoenix Environmental Labs  Client: HESNY-TUCK

Lab Code: Phoenix  Case No.:  SAS No.:  SDG No.: GBH78390

Matrix:(soil/water) SOIL  Lab Sample ID: BH78391

Sample wt/vol: 15.4 (g/mL) g  Lab File ID: 0302_19.D

Level: (low/med) Low  Date Received: 03/02/15

% Moisture: not dec. 20 decanted:(Y/N) NA  Date Extracted: 03/03/15

GPC Cleanup (Y/N): N pH: NA  Date Analyzed: 3/3/2015

Conc. Extract Volume: 1000 (uL)  Dilution Factor 1

Injection Volume: 2 (uL)

Number TICs found: 2  CONCENTRATION UNITS: (ug/L or ug/KG) ug/Kg

| CAS NUMBER | COMPOUND NAME | RT | EST. CONC. | Q |
|---|---|---|---|---|
| 000123-42-2 | 2-Pentanone, 4-hydroxy-4-methyl- | 3.763 | 1500 | JNA |
| | Unknown | 15.480 | 590 | JN |

FORM I SEMIVOA-TIC

PHOENIX

Environmental Laboratories, Inc.
587 East Middle Turnpike, P.O.Box 370, Manchester, CT 06045
Tel. (860) 645-1102 Fax (860) 645-0823

ACCREDITED IN ACCORDANCE WITH nelac
NY # 11301

# QA/QC Report

April 29, 2015

## QA/QC Data

SDG I.D.: GBH78390

| Parameter | Blank | Sample Result | Dup Result | Dup RPD | LCS % | LCSD % | LCS RPD | MS % | MSD % | MS RPD | % Rec Limits | % RPD Limits | |
|---|---|---|---|---|---|---|---|---|---|---|---|---|---|
| QA/QC Batch 300603 (mg/kg), QC Sample No: BH78166 (BH78390, BH78391) | | | | | | | | | | | | | |
| Mercury - Soil | BRL | <0.03 | <0.03 | NC | 97.0 | 101 | 4.0 | 105 | 98.8 | 6.1 | 75 - 125 | 30 | |
| QA/QC Batch 300557 (mg/kg), QC Sample No: BH78307 (BH78390, BH78391) | | | | | | | | | | | | | |
| **ICP Metals - Soil** | | | | | | | | | | | | | |
| Aluminum | BRL | 5790 | 6480 | 11.2 | 103 | 99.1 | 3.9 | NC | NC | NC | 80 - 120 | 30 | |
| Antimony | BRL | <1.8 | <3.6 | NC | 105 | 110 | 4.7 | 88.6 | 90.4 | 2.0 | 70 - 130 | 30 | |
| Arsenic | BRL | 1.3 | 1.47 | NC | 99.2 | 97.0 | 2.2 | 92.0 | 94.5 | 2.7 | 80 - 120 | 30 | |
| Barium | BRL | 62.5 | 49.3 | 23.6 | 111 | 112 | 0.9 | 91.1 | 94.3 | 3.5 | 80 - 120 | 30 | |
| Beryllium | BRL | 0.31 | 0.33 | NC | 103 | 101 | 2.0 | 96.6 | 94.6 | 2.1 | 80 - 120 | 30 | |
| Cadmium | BRL | <0.36 | <0.36 | NC | 88.6 | 89.6 | 1.1 | 92.6 | 95.9 | 3.5 | 80 - 120 | 30 | |
| Calcium | BRL | 310 | 385 | 21.6 | 103 | 102 | 1.0 | >130 | >130 | NC | 80 - 120 | 30 | m |
| Chromium | BRL | 12.2 | 13.3 | 8.60 | 103 | 106 | 2.9 | 103 | 104 | 1.0 | 80 - 120 | 30 | |
| Cobalt | BRL | 5.19 | 6.00 | 14.5 | 88.1 | 89.9 | 2.0 | 96.4 | 99.4 | 3.1 | 80 - 120 | 30 | |
| Copper | BRL | 10.7 | 11.4 | 6.30 | 95.1 | 94.8 | 0.3 | 104 | 107 | 2.8 | 80 - 120 | 30 | |
| Iron | BRL | 13500 | 16000 | 16.9 | 87.9 | 90.3 | 2.7 | NC | NC | NC | 80 - 120 | 30 | |
| Lead | BRL | 4.6 | 4.32 | 6.30 | 91.5 | 93.9 | 2.6 | 93.6 | 96.8 | 3.4 | 80 - 120 | 30 | |
| Magnesium | BRL | 1310 | 1530 | 15.5 | 103 | 102 | 1.0 | NC | NC | NC | 80 - 120 | 30 | |
| Manganese | BRL | 503 | 462 | 8.50 | 111 | 110 | 0.9 | 105 | 65.4 | 46.5 | 80 - 120 | 30 | m,r |
| Nickel | BRL | 8.91 | 9.24 | 3.60 | 101 | 102 | 1.0 | 96.1 | 99.4 | 3.4 | 80 - 120 | 30 | |
| Potassium | BRL | 686 | 653 | 4.90 | 96.4 | 90.9 | 5.9 | >130 | >130 | NC | 80 - 120 | 30 | m |
| Selenium | BRL | <1.4 | <1.4 | NC | 87.8 | 89.2 | 1.6 | 79.3 | 82.1 | 3.5 | 80 - 120 | 30 | |
| Silver | BRL | <0.36 | <0.36 | NC | 102 | 103 | 1.0 | 96.9 | 100 | 3.1 | 70 - 130 | 30 | |
| Sodium | BRL | 414 | 459 | 10.3 | 109 | 103 | 5.7 | >130 | >130 | NC | 80 - 120 | 30 | m |
| Thallium | BRL | <1.4 | <3.2 | NC | 100 | 101 | 1.0 | 94.8 | 98.0 | 3.3 | 80 - 120 | 30 | |
| Vanadium | BRL | 20.2 | 22.7 | 11.7 | 110 | 115 | 4.4 | 104 | 105 | 1.0 | 80 - 120 | 30 | |
| Zinc | BRL | 19.2 | 21.1 | 9.40 | 91.8 | 91.7 | 0.1 | 95.6 | 98.4 | 2.9 | 80 - 120 | 30 | |

m = This parameter is outside laboratory ms/msd specified recovery limits.
r = This parameter is outside laboratory rpd specified recovery limits.

PHOENIX

Environmental Laboratories, Inc.
587 East Middle Turnpike, P.O.Box 370, Manchester, CT 06045
Tel. (860) 645-1102 Fax (860) 645-0823

ACCREDITED IN ACCORDANCE WITH nelac NY # 11301

# QA/QC Report

April 29, 2015

## QA/QC Data

SDG I.D.: GBH78390

| Parameter | Blank | Sample Result | Dup Result | Dup RPD | LCS % | LCSD % | LCS RPD | MS % | MSD % | MS RPD | % Rec Limits | % RPD Limits |
|---|---|---|---|---|---|---|---|---|---|---|---|---|
| QA/QC Batch 300799 (mg/Kg), QC Sample No: BH78389 (BH78390, BH78391) | | | | | | | | | | | | |
| Total Cyanide (SW9010C Distillatio | **BRL** | **2.93** | **3.36** | **13.7** | **103** | | | **101** | | | 85 - 115 | 30 |

PHOENIX

Environmental Laboratories, Inc.
587 East Middle Turnpike, P.O.Box 370, Manchester, CT 06045
Tel. (860) 645-1102 Fax (860) 645-0823

ACCREDITED IN ACCORDANCE WITH nelac
NY # 11301

# QA/QC Report

April 29, 2015

## QA/QC Data

SDG I.D.: GBH78390

| Parameter | Blank | LCS % | LCSD % | LCS RPD | MS % | MSD % | MS RPD | % Rec Limits | % RPD Limits | |
|---|---|---|---|---|---|---|---|---|---|---|
| QA/QC Batch 300444 (ug/kg), QC Sample No: BH77859 (BH78390, BH78391) | | | | | | | | | | |
| **Semivolatiles - Solid** | | | | | | | | | | |
| 1,1-Biphenyl | ND | 76 | 79 | 3.9 | 84 | 83 | 1.2 | 30 - 130 | 30 | |
| 1,2,4,5-Tetrachlorobenzene | ND | 77 | 82 | 6.3 | 84 | 86 | 2.4 | 30 - 130 | 30 | |
| 2,3,4,6-tetrachlorophenol | ND | 94 | 98 | 4.2 | 104 | 104 | 0.0 | 30 - 130 | 30 | |
| 2,4,5-Trichlorophenol | ND | 88 | 92 | 4.4 | 98 | 98 | 0.0 | 30 - 130 | 30 | |
| 2,4,6-Trichlorophenol | ND | 87 | 91 | 4.5 | 94 | 94 | 0.0 | 30 - 130 | 30 | |
| 2,4-Dichlorophenol | ND | 82 | 88 | 7.1 | 89 | 91 | 2.2 | 30 - 130 | 30 | |
| 2,4-Dimethylphenol | ND | 78 | 80 | 2.5 | 81 | 77 | 5.1 | 30 - 130 | 30 | |
| 2,4-Dinitrophenol | ND | 26 | 31 | 17.5 | 18 | 21 | 15.4 | 30 - 130 | 30 | l,m |
| 2,4-Dinitrotoluene | ND | 88 | 90 | 2.2 | 94 | 94 | 0.0 | 30 - 130 | 30 | |
| 2,6-Dinitrotoluene | ND | 86 | 90 | 4.5 | 94 | 94 | 0.0 | 30 - 130 | 30 | |
| 2-Chloronaphthalene | ND | 77 | 81 | 5.1 | 85 | 85 | 0.0 | 30 - 130 | 30 | |
| 2-Chlorophenol | ND | 75 | 81 | 7.7 | 83 | 84 | 1.2 | 30 - 130 | 30 | |
| 2-Methylnaphthalene | ND | 80 | 85 | 6.1 | 87 | 89 | 2.3 | 30 - 130 | 30 | |
| 2-Methylphenol (o-cresol) | ND | 74 | 79 | 6.5 | 79 | 80 | 1.3 | 30 - 130 | 30 | |
| 2-Nitroaniline | ND | 89 | 95 | 6.5 | 86 | 91 | 5.6 | 30 - 130 | 30 | |
| 2-Nitrophenol | ND | 79 | 84 | 6.1 | 88 | 90 | 2.2 | 30 - 130 | 30 | |
| 3&4-Methylphenol (m&p-cresol) | ND | 82 | 87 | 5.9 | 86 | 88 | 2.3 | 30 - 130 | 30 | |
| 3,3'-Dichlorobenzidine | ND | 76 | 82 | 7.6 | 77 | 78 | 1.3 | 30 - 130 | 30 | |
| 3-Nitroaniline | ND | 85 | 89 | 4.6 | 87 | 92 | 5.6 | 30 - 130 | 30 | |
| 4,6-Dinitro-2-methylphenol | ND | 49 | 57 | 15.1 | 75 | 78 | 3.9 | 30 - 130 | 30 | |
| 4-Bromophenyl phenyl ether | ND | 81 | 85 | 4.8 | 92 | 90 | 2.2 | 30 - 130 | 30 | |
| 4-Chloro-3-methylphenol | ND | 88 | 93 | 5.5 | 94 | 96 | 2.1 | 30 - 130 | 30 | |
| 4-Chloroaniline | ND | 74 | 77 | 4.0 | 76 | 77 | 1.3 | 30 - 130 | 30 | |
| 4-Chlorophenyl phenyl ether | ND | 81 | 84 | 3.6 | 88 | 87 | 1.1 | 30 - 130 | 30 | |
| 4-Nitroaniline | ND | 85 | 90 | 5.7 | 92 | 93 | 1.1 | 30 - 130 | 30 | |
| 4-Nitrophenol | ND | 93 | 100 | 7.3 | 97 | 98 | 1.0 | 30 - 130 | 30 | |
| Acenaphthene | ND | 84 | 88 | 4.7 | 91 | 90 | 1.1 | 30 - 130 | 30 | |
| Acenaphthylene | ND | 78 | 81 | 3.8 | 85 | 84 | 1.2 | 30 - 130 | 30 | |
| Acetophenone | ND | 78 | 83 | 6.2 | 84 | 86 | 2.4 | 30 - 130 | 30 | |
| Anthracene | ND | 81 | 87 | 7.1 | 91 | 89 | 2.2 | 30 - 130 | 30 | |
| Atrazine | ND | 80 | 82 | 2.5 | 91 | 82 | 10.4 | 30 - 130 | 30 | |
| Benz(a)anthracene | ND | 84 | 89 | 5.8 | 90 | 90 | 0.0 | 30 - 130 | 30 | |
| Benzaldehyde | ND | 53 | 63 | 17.2 | 125 | 141 | 12.0 | 30 - 130 | 30 | m |
| Benzo(a)pyrene | ND | 81 | 86 | 6.0 | 89 | 89 | 0.0 | 30 - 130 | 30 | |
| Benzo(b)fluoranthene | ND | 78 | 82 | 5.0 | 88 | 85 | 3.5 | 30 - 130 | 30 | |
| Benzo(ghi)perylene | ND | 90 | 96 | 6.5 | 101 | 99 | 2.0 | 30 - 130 | 30 | |
| Benzo(k)fluoranthene | ND | 81 | 87 | 7.1 | 88 | 89 | 1.1 | 30 - 130 | 30 | |
| Benzyl butyl phthalate | ND | 85 | 88 | 3.5 | 97 | 92 | 5.3 | 30 - 130 | 30 | |
| Bis(2-chloroethoxy)methane | ND | 80 | 83 | 3.7 | 86 | 86 | 0.0 | 30 - 130 | 30 | |
| Bis(2-chloroethyl)ether | ND | 64 | 68 | 6.1 | 68 | 71 | 4.3 | 30 - 130 | 30 | |
| Bis(2-chloroisopropyl)ether | ND | 66 | 70 | 5.9 | 72 | 73 | 1.4 | 30 - 130 | 30 | |

# QA/QC Data

SDG I.D.: GBH78390

| Parameter | Blank | LCS % | LCSD % | LCS RPD | MS % | MSD % | MS RPD | % Rec Limits | % RPD Limits | |
|---|---|---|---|---|---|---|---|---|---|---|
| Bis(2-ethylhexyl)phthalate | ND | 85 | 88 | 3.5 | 96 | 91 | 5.3 | 30 - 130 | 30 | |
| Caprolactam | ND | 78 | 80 | 2.5 | 87 | 87 | 0.0 | 30 - 130 | 30 | |
| Carbazole | ND | 84 | 89 | 5.8 | 92 | 87 | 5.6 | 30 - 130 | 30 | |
| Chrysene | ND | 88 | 93 | 5.5 | 95 | 96 | 1.0 | 30 - 130 | 30 | |
| Dibenz(a,h)anthracene | ND | 89 | 95 | 6.5 | 101 | 98 | 3.0 | 30 - 130 | 30 | |
| Dibenzofuran | ND | 83 | 88 | 5.8 | 90 | 90 | 0.0 | 30 - 130 | 30 | |
| Diethyl phthalate | ND | 85 | 85 | 0.0 | 91 | 89 | 2.2 | 30 - 130 | 30 | |
| Dimethylphthalate | ND | 83 | 85 | 2.4 | 91 | 89 | 2.2 | 30 - 130 | 30 | |
| Di-n-butylphthalate | ND | 77 | 80 | 3.8 | 88 | 80 | 9.5 | 30 - 130 | 30 | |
| Di-n-octylphthalate | ND | 90 | 95 | 5.4 | 97 | 97 | 0.0 | 30 - 130 | 30 | |
| Fluoranthene | ND | 79 | 85 | 7.3 | 90 | 86 | 4.5 | 30 - 130 | 30 | |
| Fluorene | ND | 82 | 85 | 3.6 | 89 | 88 | 1.1 | 30 - 130 | 30 | |
| Hexachlorobenzene | ND | 79 | 82 | 3.7 | 90 | 84 | 6.9 | 30 - 130 | 30 | |
| Hexachlorobutadiene | ND | 74 | 77 | 4.0 | 82 | 82 | 0.0 | 30 - 130 | 30 | |
| Hexachlorocyclopentadiene | ND | 90 | 100 | 10.5 | 91 | 102 | 11.4 | 30 - 130 | 30 | |
| Hexachloroethane | ND | 66 | 71 | 7.3 | 72 | 73 | 1.4 | 30 - 130 | 30 | |
| Indeno(1,2,3-cd)pyrene | ND | 89 | 96 | 7.6 | 101 | 99 | 2.0 | 30 - 130 | 30 | |
| Isophorone | ND | 75 | 77 | 2.6 | 81 | 80 | 1.2 | 30 - 130 | 30 | |
| Naphthalene | ND | 74 | 80 | 7.8 | 81 | 83 | 2.4 | 30 - 130 | 30 | |
| Nitrobenzene | ND | 73 | 79 | 7.9 | 79 | 82 | 3.7 | 30 - 130 | 30 | |
| N-Nitrosodimethylamine | ND | 58 | 62 | 6.7 | 63 | 63 | 0.0 | 30 - 130 | 30 | |
| N-Nitrosodi-n-propylamine | ND | 76 | 80 | 5.1 | 82 | 83 | 1.2 | 30 - 130 | 30 | |
| N-Nitrosodiphenylamine | ND | 85 | 87 | 2.3 | 89 | 91 | 2.2 | 30 - 130 | 30 | |
| Pentachlorophenol | ND | 104 | 114 | 9.2 | 127 | 124 | 2.4 | 30 - 130 | 30 | |
| Phenanthrene | ND | 82 | 86 | 4.8 | 91 | 88 | 3.4 | 30 - 130 | 30 | |
| Phenol | ND | 71 | 77 | 8.1 | 77 | 79 | 2.6 | 30 - 130 | 30 | |
| Pyrene | ND | 79 | 83 | 4.9 | 90 | 85 | 5.7 | 30 - 130 | 30 | |
| % 2,4,6-Tribromophenol | 100 | 83 | 88 | 5.8 | 92 | 91 | 1.1 | 30 - 130 | 30 | |
| % 2-Fluorobiphenyl | 77 | 75 | 79 | 5.2 | 83 | 83 | 0.0 | 30 - 115 | 30 | |
| % 2-Fluorophenol | 64 | 70 | 75 | 6.9 | 76 | 77 | 1.3 | 30 - 130 | 30 | |
| % Nitrobenzene-d5 | 67 | 71 | 78 | 9.4 | 77 | 80 | 3.8 | 23 - 120 | 30 | |
| % Phenol-d5 | 70 | 73 | 79 | 7.9 | 79 | 81 | 2.5 | 30 - 130 | 30 | |
| % Terphenyl-d14 | 88 | 84 | 90 | 6.9 | 98 | 93 | 5.2 | 18 - 137 | 30 | |

QA/QC Batch 300456 (ug/Kg), QC Sample No: BH78084 2X (BH78390, BH78391)

## Polychlorinated Biphenyls - Solid

| | | | | | | | | | | |
|---|---|---|---|---|---|---|---|---|---|---|
| PCB-1016 | ND | 95 | 95 | 0.0 | 92 | 89 | 3.3 | 30 - 120 | 15 | |
| PCB-1221 | ND | | | | | | | 30 - 150 | 30 | |
| PCB-1232 | ND | | | | | | | 30 - 150 | 30 | |
| PCB-1242 | ND | | | | | | | 30 - 150 | 30 | |
| PCB-1248 | ND | | | | | | | 30 - 150 | 30 | |
| PCB-1254 | ND | | | | | | | 30 - 150 | 30 | |
| PCB-1260 | ND | 99 | 99 | 0.0 | 96 | 95 | 1.0 | 30 - 150 | 20 | |
| PCB-1262 | ND | | | | | | | 30 - 150 | 30 | |
| PCB-1268 | ND | | | | | | | 30 - 150 | 30 | |
| % DCBP (Surrogate Rec) | 83 | 103 | 102 | 1.0 | 99 | 97 | 2.0 | 30 - 150 | 20 | |
| % TCMX (Surrogate Rec) | 69 | 102 | 102 | 0.0 | 94 | 92 | 2.2 | 30 - 150 | 20 | |

QA/QC Batch 300840 (ug/kg), QC Sample No: BH78836 (BH78390, BH78391)

## Volatiles (TCL) - Solid

| | | | | | | | | | | |
|---|---|---|---|---|---|---|---|---|---|---|
| 1,1,1-Trichloroethane | ND | 102 | 111 | 8.5 | 112 | 103 | 8.4 | 70 - 130 | 30 | |
| 1,1,2,2-Tetrachloroethane | ND | 116 | 124 | 6.7 | 136 | 108 | 23.0 | 70 - 130 | 30 | m |
| 1,1,2-Trichloroethane | ND | 97 | 105 | 7.9 | 106 | 94 | 12.0 | 70 - 130 | 30 | |
| 1,1-Dichloroethane | ND | 105 | 112 | 6.5 | 114 | 105 | 8.2 | 70 - 130 | 30 | |

# QA/QC Data

SDG I.D.: GBH78390

| Parameter | Blank | LCS % | LCSD % | LCS RPD | MS % | MSD % | MS RPD | % Rec Limits | % RPD Limits |
|---|---|---|---|---|---|---|---|---|---|
| 1,1-Dichloroethene | ND | 105 | 114 | 8.2 | 114 | 101 | 12.1 | 70 - 130 | 30 |
| 1,2,3-Trichlorobenzene | ND | 100 | 110 | 9.5 | 94 | 77 | 19.9 | 70 - 130 | 30 |
| 1,2,4-Trichlorobenzene | ND | 98 | 109 | 10.6 | 95 | 77 | 20.9 | 70 - 130 | 30 |
| 1,2-Dibromo-3-chloropropane | ND | 105 | 113 | 7.3 | 123 | 95 | 25.7 | 70 - 130 | 30 |
| 1,2-Dibromoethane | ND | 98 | 106 | 7.8 | 105 | 94 | 11.1 | 70 - 130 | 30 |
| 1,2-Dichlorobenzene | ND | 102 | 112 | 9.3 | 111 | 91 | 19.8 | 70 - 130 | 30 |
| 1,2-Dichloroethane | ND | 97 | 105 | 7.9 | 103 | 93 | 10.2 | 70 - 130 | 30 |
| 1,2-Dichloropropane | ND | 104 | 112 | 7.4 | 111 | 103 | 7.5 | 70 - 130 | 30 |
| 1,3-Dichlorobenzene | ND | 100 | 112 | 11.3 | 112 | 93 | 18.5 | 70 - 130 | 30 |
| 1,4-Dichlorobenzene | ND | 106 | 118 | 10.7 | 119 | 97 | 20.4 | 70 - 130 | 30 |
| 1,4-dioxane | ND | 109 | 103 | 5.7 | 119 | 110 | 7.9 | 70 - 130 | 30 |
| 2-Hexanone | ND | 96 | 105 | 9.0 | 104 | 85 | 20.1 | 70 - 130 | 30 |
| 4-Methyl-2-pentanone | ND | 99 | 105 | 5.9 | 105 | 90 | 15.4 | 70 - 130 | 30 |
| Acetone | 8.4 JBS | 101 | 106 | 4.8 | 87 | 73 | 17.5 | 70 - 130 | 30 |
| Benzene | ND | 103 | 111 | 7.5 | 111 | 101 | 9.4 | 70 - 130 | 30 |
| Bromochloromethane | ND | 104 | 114 | 9.2 | 110 | 98 | 11.5 | 70 - 130 | 30 |
| Bromodichloromethane | ND | 105 | 112 | 6.5 | 107 | 97 | 9.8 | 70 - 130 | 30 |
| Bromoform | ND | 98 | 109 | 10.6 | 104 | 92 | 12.2 | 70 - 130 | 30 |
| Bromomethane | ND | 94 | 106 | 12.0 | 106 | 96 | 9.9 | 70 - 130 | 30 |
| Carbon Disulfide | ND | 123 | 134 | 8.6 | 116 | 106 | 9.0 | 70 - 130 | 30 |
| Carbon tetrachloride | ND | 100 | 108 | 7.7 | 106 | 99 | 6.8 | 70 - 130 | 30 |
| Chlorobenzene | ND | 102 | 112 | 9.3 | 112 | 100 | 11.3 | 70 - 130 | 30 |
| Chloroethane | ND | 94 | 100 | 6.2 | 109 | 101 | 7.6 | 70 - 130 | 30 |
| Chloroform | ND | 102 | 111 | 8.5 | 111 | 101 | 9.4 | 70 - 130 | 30 |
| Chloromethane | ND | 107 | 113 | 5.5 | 119 | 108 | 9.7 | 70 - 130 | 30 |
| cis-1,2-Dichloroethene | ND | 107 | 114 | 6.3 | 113 | 102 | 10.2 | 70 - 130 | 30 |
| cis-1,3-Dichloropropene | ND | 107 | 117 | 8.9 | 108 | 98 | 9.7 | 70 - 130 | 30 |
| Cyclohexane | ND | 97 | 103 | 6.0 | 119 | 109 | 8.8 | 70 - 130 | 30 |
| Dibromochloromethane | ND | 105 | 113 | 7.3 | 110 | 97 | 12.6 | 70 - 130 | 30 |
| Dichlorodifluoromethane | ND | 107 | 116 | 8.1 | 117 | 108 | 8.0 | 70 - 130 | 30 |
| Ethylbenzene | ND | 105 | 116 | 10.0 | 118 | 104 | 12.6 | 70 - 130 | 30 |
| Isopropylbenzene | ND | 103 | 113 | 9.3 | 128 | 106 | 18.8 | 70 - 130 | 30 |
| m&p-Xylene | ND | 103 | 113 | 9.3 | 116 | 102 | 12.8 | 70 - 130 | 30 |
| Methyl ethyl ketone | ND | 94 | 98 | 4.2 | 97 | 82 | 16.8 | 70 - 130 | 30 |
| Methyl t-butyl ether (MTBE) | ND | 98 | 106 | 7.8 | 101 | 92 | 9.3 | 70 - 130 | 30 |
| Methylacetate | ND | 100 | 109 | 8.6 | 92 | 78 | 16.5 | 70 - 130 | 30 |
| Methylcyclohexane | ND | 93 | 100 | 7.3 | 112 | 101 | 10.3 | 70 - 130 | 30 |
| Methylene chloride | ND | 101 | 108 | 6.7 | 99 | 91 | 8.4 | 70 - 130 | 30 |
| o-Xylene | ND | 105 | 115 | 9.1 | 116 | 103 | 11.9 | 70 - 130 | 30 |
| Styrene | ND | 105 | 115 | 9.1 | 111 | 99 | 11.4 | 70 - 130 | 30 |
| Tetrachloroethene | ND | 100 | 112 | 11.3 | 115 | 102 | 12.0 | 70 - 130 | 30 |
| Toluene | ND | 101 | 109 | 7.6 | 109 | 100 | 8.6 | 70 - 130 | 30 |
| trans-1,2-Dichloroethene | ND | 108 | 118 | 8.8 | 114 | 105 | 8.2 | 70 - 130 | 30 |
| trans-1,3-Dichloropropene | ND | 108 | 117 | 8.0 | 106 | 97 | 8.9 | 70 - 130 | 30 |
| Trichloroethene | ND | 99 | 106 | 6.8 | 107 | 97 | 9.8 | 70 - 130 | 30 |
| Trichlorofluoromethane | ND | 100 | 110 | 9.5 | 111 | 102 | 8.5 | 70 - 130 | 30 |
| Trichlorotrifluoroethane | ND | 104 | 112 | 7.4 | 114 | 104 | 9.2 | 70 - 130 | 30 |
| Vinyl chloride | ND | 102 | 110 | 7.5 | 119 | 110 | 7.9 | 70 - 130 | 30 |
| % 1,2-dichlorobenzene-d4 | 102 | 101 | 100 | 1.0 | 100 | 99 | 1.0 | 70 - 130 | 30 |
| % Bromofluorobenzene | 96 | 100 | 100 | 0.0 | 98 | 99 | 1.0 | 70 - 130 | 30 |
| % Dibromofluoromethane | 100 | 103 | 101 | 2.0 | 99 | 98 | 1.0 | 70 - 130 | 30 |
| % Toluene-d8 | 95 | 101 | 100 | 1.0 | 99 | 100 | 1.0 | 70 - 130 | 30 |

# QA/QC Data

SDG I.D.: GBH78390

| Parameter | Blank | LCS % | LCSD % | LCS RPD | MS % | MSD % | MS RPD | % Rec Limits | % RPD Limits |
|---|---|---|---|---|---|---|---|---|---|

l = This parameter is outside laboratory lcs/lcsd specified recovery limits.
m = This parameter is outside laboratory ms/msd specified recovery limits.

**If there are any questions regarding this data, please call Phoenix Client Services at extension 200.**

RPD - Relative Percent Difference
LCS - Laboratory Control Sample
LCSD - Laboratory Control Sample Duplicate
MS - Matrix Spike
MS Dup - Matrix Spike Duplicate
NC - No Criteria
Intf - Interference

Phyllis Shiller, Laboratory Director
April 29, 2015

# Sample Criteria Exceedences Report

## GBH78390 - HESNY-TUCK



Criteria: NY: 375, 375RRS, 375RS

State: NY

| SampNo | Acode | Phoenix Analyte | Criteria | Result | RL | Criteria | RL Criteria | Analysis Units |
|---|---|---|---|---|---|---|---|---|
| BH78390 | $DP8270_TCL | Dibenz(a,h)anthracene | NY / 375-6.8 Semivolatiles / Residential | ND | 770 | 330 | 330 | ug/Kg |
| BH78390 | $DP8270_TCL | Benz(a)anthracene | NY / 375-6.8 Semivolatiles / Residential | 5900 | 1400 | 1000 | 1000 | ug/Kg |
| BH78390 | $DP8270_TCL | Benzo(a)pyrene | NY / 375-6.8 Semivolatiles / Residential | 5200 | 770 | 1000 | 1000 | ug/Kg |
| BH78390 | $DP8270_TCL | Benzo(b)fluoranthene | NY / 375-6.8 Semivolatiles / Residential | 6400 | 1400 | 1000 | 1000 | ug/Kg |
| BH78390 | $DP8270_TCL | Benzo(k)fluoranthene | NY / 375-6.8 Semivolatiles / Residential | 2200 | 1400 | 1000 | 1000 | ug/Kg |
| BH78390 | $DP8270_TCL | Chrysene | NY / 375-6.8 Semivolatiles / Residential | 5600 | 1400 | 1000 | 1000 | ug/Kg |
| BH78390 | $DP8270_TCL | Indeno(1,2,3-cd)pyrene | NY / 375-6.8 Semivolatiles / Residential | 1900 | 1400 | 500 | 500 | ug/Kg |
| BH78390 | $DP8270_TCL | Benz(a)anthracene | NY / 375-6.8 Semivolatiles / Residential Restricted | 5900 | 1400 | 1000 | 1000 | ug/Kg |
| BH78390 | $DP8270_TCL | Benzo(a)pyrene | NY / 375-6.8 Semivolatiles / Residential Restricted | 5200 | 770 | 1000 | 1000 | ug/Kg |
| BH78390 | $DP8270_TCL | Benzo(b)fluoranthene | NY / 375-6.8 Semivolatiles / Residential Restricted | 6400 | 1400 | 1000 | 1000 | ug/Kg |
| BH78390 | $DP8270_TCL | Chrysene | NY / 375-6.8 Semivolatiles / Residential Restricted | 5600 | 1400 | 3900 | 3900 | ug/Kg |
| BH78390 | $DP8270_TCL | Dibenz(a,h)anthracene | NY / 375-6.8 Semivolatiles / Residential Restricted | ND | 770 | 330 | 330 | ug/Kg |
| BH78390 | $DP8270_TCL | Indeno(1,2,3-cd)pyrene | NY / 375-6.8 Semivolatiles / Residential Restricted | 1900 | 1400 | 500 | 500 | ug/Kg |
| BH78390 | $DP8270_TCL | Benzo(b)fluoranthene | NY / 375-6.8 Semivolatiles / Unrestricted Use Soil | 6400 | 1400 | 1000 | 1000 | ug/Kg |
| BH78390 | $DP8270_TCL | Benz(a)anthracene | NY / 375-6.8 Semivolatiles / Unrestricted Use Soil | 5900 | 1400 | 1000 | 1000 | ug/Kg |
| BH78390 | $DP8270_TCL | Benzo(a)pyrene | NY / 375-6.8 Semivolatiles / Unrestricted Use Soil | 5200 | 770 | 1000 | 1000 | ug/Kg |
| BH78390 | $DP8270_TCL | Chrysene | NY / 375-6.8 Semivolatiles / Unrestricted Use Soil | 5600 | 1400 | 1000 | 1000 | ug/Kg |
| BH78390 | $DP8270_TCL | Phenol | NY / 375-6.8 Semivolatiles / Unrestricted Use Soil | ND | 1400 | 330 | 330 | ug/Kg |
| BH78390 | $DP8270_TCL | Dibenz(a,h)anthracene | NY / 375-6.8 Semivolatiles / Unrestricted Use Soil | ND | 770 | 330 | 330 | ug/Kg |
| BH78390 | $DP8270_TCL | Pentachlorophenol | NY / 375-6.8 Semivolatiles / Unrestricted Use Soil | ND | 1400 | 800 | 800 | ug/Kg |
| BH78390 | $DP8270_TCL | Benzo(k)fluoranthene | NY / 375-6.8 Semivolatiles / Unrestricted Use Soil | 2200 | 1400 | 800 | 800 | ug/Kg |
| BH78390 | $DP8270_TCL | Indeno(1,2,3-cd)pyrene | NY / 375-6.8 Semivolatiles / Unrestricted Use Soil | 1900 | 1400 | 500 | 500 | ug/Kg |
| BH78390 | $DP8270_TCL | 2-Methylphenol (o-cresol) | NY / 375-6.8 Semivolatiles / Unrestricted Use Soil | ND | 1400 | 330 | 330 | ug/Kg |
| BH78390 | HG-SM | Mercury | NY / 375-6.8 Metals / Unrestricted Use Soil | 0.32 | 0.03 | 0.18 | 0.18 | mg/Kg |
| BH78390 | PB-SMDP | Lead | NY / 375-6.8 Metals / Unrestricted Use Soil | 82.8 | 0.8 | 63 | 63 | mg/Kg |
| BH78390 | ZN-SMDP | Zinc | NY / 375-6.8 Metals / Unrestricted Use Soil | 215 | 7.7 | 109 | 109 | mg/Kg |
| BH78391 | $DIOX_SMR | 1,4-dioxane | NY / 375-6.8 Volatiles / Unrestricted Use Soil | ND | 110 | 100 | 100 | ug/kg |
| BH78391 | $DP8260_TCLS | Acetone | NY / 375-6.8 Volatiles / Unrestricted Use Soil | 200 | 53 | 50 | 50 | ug/Kg |
| BH78391 | CR-SM | Chromium | NY / 375-6.8 Metals / Unrestricted Use Soil | 31.4 | 0.37 | 30 | | mg/Kg |

Phoenix Laboratories does not assume responsibility for the data contained in this report. It is provided as an additional tool to identify requested criteria exceedences. All efforts are made to ensure the accuracy of the data (obtained from appropriate agencies). A lack of exceedence information does not necessarily suggest conformance to the criteria. It is ultimately the site professional's responsibility to determine appropriate compliance.

**Environmental Laboratories, Inc.**
**587 East Middle Turnpike, P.O.Box 370, Manchester, CT 06045**
**Tel. (860) 645-1102 Fax (860) 645-0823**

ACCREDITED IN ACCORDANCE WITH nelac NY # 11301

# NY Temperature Narration

**April 29, 2015**

**SDG I.D.: GBH78390**

The samples in this delivery group were received at 4°C.
(Note acceptance criteria is above freezing up to 6°C)

**PHOENIX**
*Environmental Laboratories, Inc.*

# NY/NJ CHAIN OF CUSTODY RECORD

587 East Middle Turnpike, P.O. Box 370, Manchester, CT 06040
Email: info@phoenixlabs.com Fax (860) 645-0823
**Client Services (860) 645-8726**

Temp 4 cwk Pg 1 of 1

**Data Delivery:**
☐ Fax #:
☒ Email: info@hesny.com

Customer:
Address: HYDROENVIRONMENTAL SOLUTIONS
ONE DEANS BRIDGE ROAD
SOMERS, NEW YORK 10589

Project: 109 Marbledale Rd, Tuckahoe NY
Report to: Tim Carr
Invoice to: →

Project P.O:
Phone #: 914-276-2560
Fax #: 914-276-2664

**Client Sample - Information - Identification**

Sampler's Signature: RC[illegible] Date: 2/26/15

**Matrix Code:**
DW=drinking water WW=wastewater S=soil/solid O=oil
GW=groundwater SL=sludge A=air X=other

Analysis Request

| Phoenix Sample # | Customer Sample Identification | Sample Matrix | Date Sampled | Time Sampled | TCL VOC | TCL SVOC | TCL PCB | Tal Metals | Cyanide | Arsenic | Soil VOA ☒ Methanol [ ] S. Bisulfate ☒ H2O | GL Soil container ( 8 ) oz | GL Soil container ( ) oz | 40 ml VOA Vial [ ] As is [ ] HCl | GL Amber 1000ml [ ] As is [ ] H2SO4 | PL As is [ ] 250ml [ ] 500ml [ ] 1000ml | PL H2SO4 [ ] 250ml [ ] 500ml | PL HNO3 250ml | PL NaOH 250ml | Bacteria Bottle |
|---|---|---|---|---|---|---|---|---|---|---|---|---|---|---|---|---|---|---|---|---|
| 78390 | TB-13(4-6) | S | 2/26/15 | | ✓ | ✓ | ✓ | ✓ | ✓ | ✓ | 3 | 2 | | | | | | | | |
| 78391 | TB-13(26-28) | S | ✓ | | ✓ | ✓ | ✓ | ✓ | ✓ | ✓ | 3 | 2 | | | | | | | | |

| Relinquished by: | Accepted by: | Date: | Time: |
|---|---|---|---|
| [signature] | [signature] | 3-2-15 | 12-60 |
| [signature] | Monica [signature] | 3/2/15 | 15:48 |

Comments, Special Requirements or Regulations:

**Turnaround:**
☐ 1 Day*
☐ 2 Days*
☐ 3 Days*
☒ Standard
☐ Other
* SURCHARGE APPLIES

**NJ**
☐ Res. Criteria
☐ Non-Res. Criteria
☐ Impact to GW Soil Cleanup Criteria
☐ GW Criteria

**NY**
☐ TAGM 4046 GW
☐ TAGM 4046 SOIL
☒ NY375 Unrestricted Soil
☒ NY375 Residential Soil
☒ NY375 Restricted Non-Residential Soil

**Data Format**
☐ Phoenix Std Report
☐ Excel
☒ PDF
☐ GIS/Key
☒ EQuIS
☐ NJ Hazsite EDD
☐ NY EZ EDD (ASP)
☐ Other

**Data Package**
☐ NJ Reduced Deliv. *
☐ NY Enhanced (ASP B) *
☐ Other

State where samples were collected: NY

## Sarah - Phoenixlabs

**From:** Rachel Griffiths [rgriffiths@hes-nj.com]
**Sent:** Monday, April 06, 2015 4:06 PM
**To:** Sarah - Phoenixlabs; rowanenv1@aol.com
**Cc:** Tim Carr; Alyssa N. Epstein
**Subject:** RE: Marbledale Road, Tuckahoe - ASP-B Data Package

Yes from here on out, that'll be much easier... it was sort of a retroactive realization that we had forgotten!

Our validator has requested a hard copy, though we can work that out in-house if you don't do it.

Thanks for your help, as usual!!

-Rachel

Rachel E. Griffiths
Geologist/Hydrogeologist

HydroEnvironmental Solutions, Inc.
One Deans Bridge Road
Somers, New York 10589
Phone: (914) 276-2560
Fax: (914) 276-2664
Cell: (914) 512-0779
www.hesny.com

-----Original Message-----
From: Sarah - Phoenixlabs [mailto:sarah@phoenixlabs.com]
Sent: Monday, April 06, 2015 3:58 PM
To: Rachel Griffiths; rowanenv1@aol.com
Cc: Tim Carr; Alyssa N. Epstein
Subject: RE: Marbledale Road, Tuckahoe - ASP-B Data Package

Rachel,

Should be ok there may be a charge to add these on now, I will let you know.
Going forward please mark on the chain that you need ASP B (we don't charge for these if added at time of sample receipt) it is in the lower right side of the chain even if you don't end up using them as full packages it will save a tremendous amount of time for our Deliverables Team to do upfront.
We will deliver the final package to you and you can add your Validator to this account so they can retrieve all excels and reports they need. Please give me their information once you have it. We do not send out a hard copy normally.

I will let you know the time frame of when you can expect the ASP Bs once I know.

Thanks and will let you know if anything comes up and we can't .
Sarah

-----Original Message-----
From: Rachel Griffiths [mailto:rgriffiths@hes-nj.com]

Sent: Monday, April 06, 2015 3:40 PM
To: Sarah - Phoenixlabs
Cc: Tim Carr; Alyssa N. Epstein
Subject: Marbledale Road, Tuckahoe - ASP-B Data Package

Hi Sarah!!

We will be needing data deliverables that meet the criteria for ASP-B data package for the following delivery groups (and select future data for this
project):

GBH82998
GBH79483
GBH78390
GBH78384

Do you need anything from me to go ahead and get started with this?

Ultimately, HES will receive the electronic copy and a data validator will receive the hard copy.

Give me a call if you'd like to discuss: 914-512-0779

Best,
Rachel

Rachel E. Griffiths
Geologist/Hydrogeologist

HydroEnvironmental Solutions, Inc.
One Deans Bridge Road
Somers, New York 10589
Phone: (914) 276-2560
Fax: (914) 276-2664
Cell: (914) 512-0779
www.hesny.com

PHOENIX
Environmental Laboratories, Inc.

Friday, May 01, 2015

Attn: Mr. Tim Carr
HydroEnvironmental Solutions, Inc.
One Deans Bridge Rd
Somers NY 10589

Project ID: 109 MARBLEDALE RD TUCKAHOE NY
Sample ID#s: BH78384 - BH78389

This laboratory is in compliance with the NELAC requirements of procedures used except where indicated.

This report contains results for the parameters tested, under the sampling conditions described on the Chain Of Custody, as received by the laboratory.

All soils, solids and sludges are reported on a dry weight basis unless otherwise noted in the sample comments.

A scanned version of the COC form accompanies the analytical report and is an exact duplicate of the original.

Enclosed are revised Analysis Report pages. Please replace and discard the original pages. If you have any questions concerning this testing, please do not hesitate to contact Phoenix Client Services at ext. 200.

Sincerely yours,

Phyllis Shiller
Laboratory Director

NELAC - #NY11301
CT Lab Registration #PH-0618
MA Lab Registration #MA-CT-007
ME Lab Registration #CT-007
NH Lab Registration #213693-A,B
NJ Lab Registration #CT-003
NY Lab Registration #11301
PA Lab Registration #68-03530
RI Lab Registration #63
VT Lab Registration #VT11301

587 East Middle Turnpike, P.O. Box 370, Manchester, CT 06040
Telephone (860) 645-1102 Fax (860) 645-0823

PHOENIX

Environmental Laboratories, Inc.
587 East Middle Turnpike, P.O.Box 370, Manchester, CT 06045
Tel. (860) 645-1102 Fax (860) 645-0823

ACCREDITED IN ACCORDANCE WITH nelac
NY # 11301

# SDG Comments

May 01, 2015

SDG I.D.: GBH78384

---

Version 1: Analysis results minus QC and forms.

Version 2: Complete report with QC and forms.

Please be advised that the NY 375 soil criteria for chromium are based on hexavalent chromium and trivalent chromium.

**Environmental Laboratories, Inc.**
**587 East Middle Turnpike, P.O.Box 370, Manchester, CT 06045**
**Tel. (860) 645-1102 Fax (860) 645-0823**

ACCREDITED IN ACCORDANCE WITH nelac NY # 11301

# NY ANALYTICAL SERVICES PROTOCOL
# DATA PACKAGE

**Client: HydroEnvironmental Solutions, Inc.**

**Project: 109 MARBLEDALE RD TUCKAHOE NY**

**Laboratory Project: GBH78384**

PHOENIX

**Environmental Laboratories, Inc.**
**587 East Middle Turnpike, P.O.Box 370, Manchester, CT 06040**
**Tel. (860) 645-1102 Fax (860) 645-0823**

ACCREDITED IN ACCORDANCE WITH nelac NY # 11301

# NY Analytical Services Protocol Format

**May 01, 2015** **SDG I.D.: GBH78384**

**HydroEnvironmental Solutions, Inc. 109 MARBLEDALE RD TUCKAHOE NY**

## Methodology Summary

### Volatiles

USEPA SW-846 Test Methods for Evaluating Solid Waste Physical/Chemical Methods 3rd Ed. Update V, Method 8260C and Environmental Protection Agency, EPA-600/4-79-020, Revised March 1983 (Methods 624) as printed in 40CFR part 136.

### Accelerated Solvent Extraction (ASE)

Soil Sample - USEPA SW-846 Test Methods for Evaluating Solid Waste Physical/Chemical Methods 3rd Ed.Update III, Method 3545A.

### Mercury Prep

Soil Sample - USEPA SW-846 Test Methods for Evaluating Solid Waste Physical/Chemical Methods 3rd Ed. Update IV, Method 7471B.

### Metals

ICP :
USEPA SW-846 Test Methods for Evaluating Solid Waste Physical/Chemical Methods 3rd Ed. Update IV, Method 6010C.
Mercury:
USEPA SW-846 Test Methods for Evaluating Solid Waste Physical/Chemical Methods Update III, 7471

### Polychlorinated Biphenyls (PCBs):

USEPA SW-846 Test Methods for Evaluating Solid Waste Physical/Chemical Methods 3rd Ed. Update IV, Method 8082A.

### Semivolatile Organic Compounds

USEPA SW-846 Test Methods for Evaluating Solid Waste Physical/Chemical Methods 3rd Ed. Update IV, Method 8270D.

PHOENIX

**Environmental Laboratories, Inc.**
587 East Middle Turnpike, P.O.Box 370, Manchester, CT 06040
Tel. (860) 645-1102 Fax (860) 645-0823

ACCREDITED IN ACCORDANCE WITH nelac NY # 11301

# NY Analytical Services Protocol Format

**May 01, 2015** **SDG I.D.: GBH78384**

**HydroEnvironmental Solutions, Inc. 109 MARBLEDALE RD TUCKAHOE NY**

## Sample Id Cross Reference

| Client Id | Lab Id | Matrix |
|---|---|---|
| TB-12 4-6 | BH78384 | SOLID |
| TB-12 28-30 | BH78385 | SOLID |
| TB-11 4-6 | BH78386 | SOLID |
| TB-11 21-23 | BH78387 | SOLID |
| TB-8 2-4 | BH78388 | SOLID |
| TB-8 20-22 | BH78389 | SOLID |

PHOENIX

Environmental Laboratories, Inc.
587 East Middle Turnpike, P.O.Box 370, Manchester, CT 06040
Tel. (860) 645-1102 Fax (860) 645-0823

ACCREDITED IN ACCORDANCE WITH nelac NY # 11301

# NY Analytical Services Protocol Format

**May 01, 2015** **SDG I.D.: GBH78384**

**HydroEnvironmental Solutions, Inc. 109 MARBLEDALE RD TUCKAHOE NY**

## Laboratory Chronicle

**The samples in this delivery group were received at 4°C.**

| Sample | Analysis | Collection Date | Extraction Date | Analysis Date | Analyst | Hold Time Met |
|---|---|---|---|---|---|---|
| BH78384 | 1,4-dioxane | 02/26/15 | 03/04/15 | 03/04/15 | JLI | Y |
| BH78384 | Aluminum | 02/26/15 | 03/02/15 | 03/03/15 | LK | Y |
| BH78384 | Antimony | 02/26/15 | 03/02/15 | 03/03/15 | LK | Y |
| BH78384 | Arsenic | 02/26/15 | 03/02/15 | 03/03/15 | LK | Y |
| BH78384 | Barium | 02/26/15 | 03/02/15 | 03/03/15 | LK | Y |
| BH78384 | Beryllium | 02/26/15 | 03/02/15 | 03/03/15 | LK | Y |
| BH78384 | Cadmium | 02/26/15 | 03/02/15 | 03/03/15 | LK | Y |
| BH78384 | Calcium | 02/26/15 | 03/02/15 | 03/03/15 | LK | Y |
| BH78384 | Chromium | 02/26/15 | 03/02/15 | 03/03/15 | LK | Y |
| BH78384 | Cobalt | 02/26/15 | 03/02/15 | 03/03/15 | LK | Y |
| BH78384 | Copper | 02/26/15 | 03/02/15 | 03/03/15 | LK | Y |
| BH78384 | Iron | 02/26/15 | 03/02/15 | 03/03/15 | LK | Y |
| BH78384 | Lead | 02/26/15 | 03/02/15 | 03/03/15 | LK | Y |
| BH78384 | Magnesium | 02/26/15 | 03/02/15 | 03/03/15 | LK | Y |
| BH78384 | Manganese | 02/26/15 | 03/02/15 | 03/03/15 | EK | Y |
| BH78384 | Mercury | 02/26/15 | 03/03/15 | 03/03/15 | MA | Y |
| BH78384 | Nickel | 02/26/15 | 03/02/15 | 03/03/15 | LK | Y |
| BH78384 | Polychlorinated Biphenyls | 02/26/15 | 03/02/15 | 03/03/15 | AW | Y |
| BH78384 | Potassium | 02/26/15 | 03/02/15 | 03/03/15 | LK | Y |
| BH78384 | Selenium | 02/26/15 | 03/02/15 | 03/03/15 | LK | Y |
| BH78384 | Semivolatiles | 02/26/15 | 03/02/15 | 03/03/15 | DD | Y |
| BH78384 | Silver | 02/26/15 | 03/02/15 | 03/03/15 | LK | Y |
| BH78384 | Sodium | 02/26/15 | 03/02/15 | 03/03/15 | LK | Y |
| BH78384 | Thallium | 02/26/15 | 03/02/15 | 03/03/15 | LK | Y |
| BH78384 | Total Cyanide (SW9010C Distillation) | 02/26/15 | 03/02/15 | 03/02/15 | O/EG | Y |
| BH78384 | Vanadium | 02/26/15 | 03/02/15 | 03/03/15 | LK | Y |
| BH78384 | Volatiles | 02/26/15 | 03/04/15 | 03/04/15 | JLI | Y |
| BH78384 | Zinc | 02/26/15 | 03/02/15 | 03/03/15 | LK | Y |
| BH78385 | 1,4-dioxane | 02/26/15 | 03/03/15 | 03/03/15 | JLI | Y |
| BH78385 | Aluminum | 02/26/15 | 03/02/15 | 03/04/15 | LK | Y |
| BH78385 | Antimony | 02/26/15 | 03/02/15 | 03/03/15 | LK | Y |
| BH78385 | Arsenic | 02/26/15 | 03/02/15 | 03/03/15 | LK | Y |

PHOENIX

**Environmental Laboratories, Inc.**
587 East Middle Turnpike, P.O.Box 370, Manchester, CT 06040
Tel. (860) 645-1102 Fax (860) 645-0823

ACCREDITED IN ACCORDANCE WITH nelac NY # 11301

# NY Analytical Services Protocol Format

**May 01, 2015** **SDG I.D.: GBH78384**

**HydroEnvironmental Solutions, Inc. 109 MARBLEDALE RD TUCKAHOE NY**

| | | | | | | |
|---|---|---|---|---|---|---|
| BH78385 | Barium | 02/26/15 | 03/02/15 | 03/03/15 | LK | Y |
| BH78385 | Beryllium | 02/26/15 | 03/02/15 | 03/03/15 | LK | Y |
| BH78385 | Cadmium | 02/26/15 | 03/02/15 | 03/03/15 | LK | Y |
| BH78385 | Calcium | 02/26/15 | 03/02/15 | 03/03/15 | LK | Y |
| BH78385 | Chromium | 02/26/15 | 03/02/15 | 03/03/15 | LK | Y |
| BH78385 | Cobalt | 02/26/15 | 03/02/15 | 03/03/15 | LK | Y |
| BH78385 | Copper | 02/26/15 | 03/02/15 | 03/03/15 | LK | Y |
| BH78385 | Iron | 02/26/15 | 03/02/15 | 03/03/15 | LK | Y |
| BH78385 | Lead | 02/26/15 | 03/02/15 | 03/03/15 | LK | Y |
| BH78385 | Magnesium | 02/26/15 | 03/02/15 | 03/03/15 | LK | Y |
| BH78385 | Manganese | 02/26/15 | 03/02/15 | 03/03/15 | EK | Y |
| BH78385 | Mercury | 02/26/15 | 03/03/15 | 03/03/15 | MA | Y |
| BH78385 | Nickel | 02/26/15 | 03/02/15 | 03/03/15 | LK | Y |
| BH78385 | Polychlorinated Biphenyls | 02/26/15 | 03/02/15 | 03/03/15 | AW | Y |
| BH78385 | Potassium | 02/26/15 | 03/02/15 | 03/03/15 | LK | Y |
| BH78385 | Selenium | 02/26/15 | 03/02/15 | 03/03/15 | LK | Y |
| BH78385 | Semivolatiles | 02/26/15 | 03/02/15 | 03/02/15 | DD | Y |
| BH78385 | Silver | 02/26/15 | 03/02/15 | 03/03/15 | LK | Y |
| BH78385 | Sodium | 02/26/15 | 03/02/15 | 03/03/15 | LK | Y |
| BH78385 | Thallium | 02/26/15 | 03/02/15 | 03/03/15 | LK | Y |
| BH78385 | Total Cyanide (SW9010C Distillation) | 02/26/15 | 03/02/15 | 03/02/15 | O/EG | Y |
| BH78385 | Vanadium | 02/26/15 | 03/02/15 | 03/03/15 | LK | Y |
| BH78385 | Volatiles | 02/26/15 | 03/03/15 | 03/03/15 | JLI | Y |
| BH78385 | Zinc | 02/26/15 | 03/02/15 | 03/03/15 | LK | Y |
| BH78386 | 1,4-dioxane | 02/27/15 | 03/03/15 | 03/03/15 | JLI | Y |
| BH78386 | Aluminum | 02/27/15 | 03/02/15 | 03/04/15 | LK | Y |
| BH78386 | Antimony | 02/27/15 | 03/02/15 | 03/03/15 | LK | Y |
| BH78386 | Arsenic | 02/27/15 | 03/02/15 | 03/03/15 | LK | Y |
| BH78386 | Barium | 02/27/15 | 03/02/15 | 03/03/15 | LK | Y |
| BH78386 | Beryllium | 02/27/15 | 03/02/15 | 03/03/15 | LK | Y |
| BH78386 | Cadmium | 02/27/15 | 03/02/15 | 03/03/15 | LK | Y |
| BH78386 | Calcium | 02/27/15 | 03/02/15 | 03/04/15 | LK | Y |
| BH78386 | Chromium | 02/27/15 | 03/02/15 | 03/03/15 | LK | Y |
| BH78386 | Cobalt | 02/27/15 | 03/02/15 | 03/03/15 | LK | Y |
| BH78386 | Copper | 02/27/15 | 03/02/15 | 03/03/15 | LK | Y |
| BH78386 | Iron | 02/27/15 | 03/02/15 | 03/04/15 | LK | Y |
| BH78386 | Lead | 02/27/15 | 03/02/15 | 03/03/15 | LK | Y |

PHOENIX

**Environmental Laboratories, Inc.**
587 East Middle Turnpike, P.O.Box 370, Manchester, CT 06040
Tel. (860) 645-1102 Fax (860) 645-0823

ACCREDITED IN ACCORDANCE WITH nelac NY # 11301

# NY Analytical Services Protocol Format

**May 01, 2015** **SDG I.D.: GBH78384**

**HydroEnvironmental Solutions, Inc. 109 MARBLEDALE RD TUCKAHOE NY**

| | | | | | | |
|---|---|---|---|---|---|---|
| BH78386 | Magnesium | 02/27/15 | 03/02/15 | 03/04/15 | LK | Y |
| BH78386 | Manganese | 02/27/15 | 03/02/15 | 03/04/15 | LK | Y |
| BH78386 | Mercury | 02/27/15 | 03/03/15 | 03/03/15 | MA | Y |
| BH78386 | Nickel | 02/27/15 | 03/02/15 | 03/03/15 | LK | Y |
| BH78386 | Polychlorinated Biphenyls | 02/27/15 | 03/02/15 | 03/03/15 | AW | Y |
| BH78386 | Potassium | 02/27/15 | 03/02/15 | 03/03/15 | LK | Y |
| BH78386 | Selenium | 02/27/15 | 03/02/15 | 03/03/15 | LK | Y |
| BH78386 | Semivolatiles | 02/27/15 | 03/02/15 | 03/03/15 | DD | Y |
| BH78386 | Silver | 02/27/15 | 03/02/15 | 03/03/15 | LK | Y |
| BH78386 | Sodium | 02/27/15 | 03/02/15 | 03/03/15 | LK | Y |
| BH78386 | Thallium | 02/27/15 | 03/02/15 | 03/03/15 | LK | Y |
| BH78386 | Total Cyanide (SW9010C Distillation) | 02/27/15 | 03/02/15 | 03/02/15 | O/EG | Y |
| BH78386 | Vanadium | 02/27/15 | 03/02/15 | 03/03/15 | LK | Y |
| BH78386 | Volatiles | 02/27/15 | 03/03/15 | 03/03/15 | JLI | Y |
| BH78386 | Zinc | 02/27/15 | 03/02/15 | 03/03/15 | LK | Y |
| BH78387 | 1,4-dioxane | 02/27/15 | 03/03/15 | 03/03/15 | JLI | Y |
| BH78387 | Aluminum | 02/27/15 | 03/02/15 | 03/03/15 | LK | Y |
| BH78387 | Antimony | 02/27/15 | 03/02/15 | 03/03/15 | LK | Y |
| BH78387 | Arsenic | 02/27/15 | 03/02/15 | 03/03/15 | LK | Y |
| BH78387 | Barium | 02/27/15 | 03/02/15 | 03/03/15 | LK | Y |
| BH78387 | Beryllium | 02/27/15 | 03/02/15 | 03/03/15 | LK | Y |
| BH78387 | Cadmium | 02/27/15 | 03/02/15 | 03/03/15 | LK | Y |
| BH78387 | Calcium | 02/27/15 | 03/02/15 | 03/03/15 | LK | Y |
| BH78387 | Chromium | 02/27/15 | 03/02/15 | 03/03/15 | LK | Y |
| BH78387 | Cobalt | 02/27/15 | 03/02/15 | 03/03/15 | LK | Y |
| BH78387 | Copper | 02/27/15 | 03/02/15 | 03/03/15 | LK | Y |
| BH78387 | Iron | 02/27/15 | 03/02/15 | 03/03/15 | LK | Y |
| BH78387 | Lead | 02/27/15 | 03/02/15 | 03/03/15 | LK | Y |
| BH78387 | Magnesium | 02/27/15 | 03/02/15 | 03/03/15 | LK | Y |
| BH78387 | Manganese | 02/27/15 | 03/02/15 | 03/03/15 | EK | Y |
| BH78387 | Mercury | 02/27/15 | 03/03/15 | 03/03/15 | MA | Y |
| BH78387 | Nickel | 02/27/15 | 03/02/15 | 03/03/15 | LK | Y |
| BH78387 | Polychlorinated Biphenyls | 02/27/15 | 03/02/15 | 03/03/15 | AW | Y |
| BH78387 | Potassium | 02/27/15 | 03/02/15 | 03/03/15 | LK | Y |
| BH78387 | Selenium | 02/27/15 | 03/02/15 | 03/03/15 | LK | Y |
| BH78387 | Semivolatiles | 02/27/15 | 03/02/15 | 03/03/15 | DD | Y |
| BH78387 | Silver | 02/27/15 | 03/02/15 | 03/03/15 | LK | Y |

PHOENIX

**Environmental Laboratories, Inc.**
587 East Middle Turnpike, P.O.Box 370, Manchester, CT 06040
Tel. (860) 645-1102 Fax (860) 645-0823

ACCREDITED IN ACCORDANCE WITH nelac NY # 11301

# NY Analytical Services Protocol Format

**May 01, 2015** **SDG I.D.: GBH78384**

**HydroEnvironmental Solutions, Inc. 109 MARBLEDALE RD TUCKAHOE NY**

| | | | | | | |
|---|---|---|---|---|---|---|
| BH78387 | Sodium | 02/27/15 | 03/02/15 | 03/03/15 | LK | Y |
| BH78387 | Thallium | 02/27/15 | 03/02/15 | 03/03/15 | LK | Y |
| BH78387 | Total Cyanide (SW9010C Distillation) | 02/27/15 | 03/04/15 | 03/04/15 | O/B/E | Y |
| BH78387 | Vanadium | 02/27/15 | 03/02/15 | 03/03/15 | LK | Y |
| BH78387 | Volatiles | 02/27/15 | 03/03/15 | 03/03/15 | JLI | Y |
| BH78387 | Zinc | 02/27/15 | 03/02/15 | 03/03/15 | LK | Y |
| BH78388 | 1,4-dioxane | 02/27/15 | 03/03/15 | 03/03/15 | JLI | Y |
| BH78388 | Aluminum | 02/27/15 | 03/02/15 | 03/03/15 | LK | Y |
| BH78388 | Antimony | 02/27/15 | 03/02/15 | 03/03/15 | LK | Y |
| BH78388 | Arsenic | 02/27/15 | 03/02/15 | 03/03/15 | LK | Y |
| BH78388 | Barium | 02/27/15 | 03/02/15 | 03/03/15 | LK | Y |
| BH78388 | Beryllium | 02/27/15 | 03/02/15 | 03/03/15 | LK | Y |
| BH78388 | Cadmium | 02/27/15 | 03/02/15 | 03/03/15 | LK | Y |
| BH78388 | Calcium | 02/27/15 | 03/02/15 | 03/03/15 | LK | Y |
| BH78388 | Chromium | 02/27/15 | 03/02/15 | 03/03/15 | LK | Y |
| BH78388 | Cobalt | 02/27/15 | 03/02/15 | 03/03/15 | LK | Y |
| BH78388 | Copper | 02/27/15 | 03/02/15 | 03/03/15 | LK | Y |
| BH78388 | Iron | 02/27/15 | 03/02/15 | 03/03/15 | LK | Y |
| BH78388 | Lead | 02/27/15 | 03/02/15 | 03/03/15 | LK | Y |
| BH78388 | Magnesium | 02/27/15 | 03/02/15 | 03/04/15 | LK | Y |
| BH78388 | Manganese | 02/27/15 | 03/02/15 | 03/03/15 | EK | Y |
| BH78388 | Mercury | 02/27/15 | 03/03/15 | 03/03/15 | MA | Y |
| BH78388 | Nickel | 02/27/15 | 03/02/15 | 03/03/15 | LK | Y |
| BH78388 | Polychlorinated Biphenyls | 02/27/15 | 03/02/15 | 03/03/15 | AW | Y |
| BH78388 | Potassium | 02/27/15 | 03/02/15 | 03/03/15 | LK | Y |
| BH78388 | Selenium | 02/27/15 | 03/02/15 | 03/03/15 | LK | Y |
| BH78388 | Semivolatiles | 02/27/15 | 03/02/15 | 03/03/15 | DD | Y |
| BH78388 | Silver | 02/27/15 | 03/02/15 | 03/03/15 | LK | Y |
| BH78388 | Sodium | 02/27/15 | 03/02/15 | 03/03/15 | LK | Y |
| BH78388 | Thallium | 02/27/15 | 03/02/15 | 03/03/15 | LK | Y |
| BH78388 | Total Cyanide (SW9010C Distillation) | 02/27/15 | 03/04/15 | 03/04/15 | O/B/E | Y |
| BH78388 | Vanadium | 02/27/15 | 03/02/15 | 03/03/15 | LK | Y |
| BH78388 | Volatiles | 02/27/15 | 03/03/15 | 03/03/15 | JLI | Y |
| BH78388 | Zinc | 02/27/15 | 03/02/15 | 03/03/15 | LK | Y |
| BH78389 | 1,4-dioxane | 02/27/15 | 03/03/15 | 03/03/15 | JLI | Y |
| BH78389 | Aluminum | 02/27/15 | 03/02/15 | 03/03/15 | LK | Y |
| BH78389 | Antimony | 02/27/15 | 03/02/15 | 03/03/15 | LK | Y |

PHOENIX

**Environmental Laboratories, Inc.**
587 East Middle Turnpike, P.O.Box 370, Manchester, CT 06040
Tel. (860) 645-1102 Fax (860) 645-0823

ACCREDITED IN ACCORDANCE WITH nelac NY # 11301

# NY Analytical Services Protocol Format

**May 01, 2015** **SDG I.D.: GBH78384**

**HydroEnvironmental Solutions, Inc. 109 MARBLEDALE RD TUCKAHOE NY**

| | | | | | | |
|---|---|---|---|---|---|---|
| BH78389 | Arsenic | 02/27/15 | 03/02/15 | 03/03/15 | LK | Y |
| BH78389 | Barium | 02/27/15 | 03/02/15 | 03/03/15 | LK | Y |
| BH78389 | Beryllium | 02/27/15 | 03/02/15 | 03/03/15 | LK | Y |
| BH78389 | Cadmium | 02/27/15 | 03/02/15 | 03/03/15 | LK | Y |
| BH78389 | Calcium | 02/27/15 | 03/02/15 | 03/04/15 | LK | Y |
| BH78389 | Chromium | 02/27/15 | 03/02/15 | 03/03/15 | LK | Y |
| BH78389 | Cobalt | 02/27/15 | 03/02/15 | 03/03/15 | LK | Y |
| BH78389 | Copper | 02/27/15 | 03/02/15 | 03/03/15 | LK | Y |
| BH78389 | Iron | 02/27/15 | 03/02/15 | 03/03/15 | LK | Y |
| BH78389 | Lead | 02/27/15 | 03/02/15 | 03/03/15 | LK | Y |
| BH78389 | Magnesium | 02/27/15 | 03/02/15 | 03/04/15 | LK | Y |
| BH78389 | Manganese | 02/27/15 | 03/02/15 | 03/03/15 | EK | Y |
| BH78389 | Mercury | 02/27/15 | 03/03/15 | 03/03/15 | MA | Y |
| BH78389 | Nickel | 02/27/15 | 03/02/15 | 03/03/15 | LK | Y |
| BH78389 | Polychlorinated Biphenyls | 02/27/15 | 03/02/15 | 03/03/15 | AW | Y |
| BH78389 | Potassium | 02/27/15 | 03/02/15 | 03/03/15 | LK | Y |
| BH78389 | Selenium | 02/27/15 | 03/02/15 | 03/03/15 | LK | Y |
| BH78389 | Semivolatiles | 02/27/15 | 03/02/15 | 03/03/15 | DD | Y |
| BH78389 | Silver | 02/27/15 | 03/02/15 | 03/03/15 | LK | Y |
| BH78389 | Sodium | 02/27/15 | 03/02/15 | 03/03/15 | LK | Y |
| BH78389 | Thallium | 02/27/15 | 03/02/15 | 03/03/15 | LK | Y |
| BH78389 | Total Cyanide (SW9010C Distillation) | 02/27/15 | 03/04/15 | 03/04/15 | O/B/E | Y |
| BH78389 | Vanadium | 02/27/15 | 03/02/15 | 03/03/15 | LK | Y |
| BH78389 | Volatiles | 02/27/15 | 03/03/15 | 03/03/15 | JLI | Y |
| BH78389 | Zinc | 02/27/15 | 03/02/15 | 03/03/15 | LK | Y |

PHOENIX

Environmental Laboratories, Inc.
587 East Middle Turnpike, P.O.Box 370, Manchester, CT 06045
Tel. (860) 645-1102 Fax (860) 645-0823

ACCREDITED IN ACCORDANCE WITH nelac NY # 11301

# Analysis Report

May 01, 2015

FOR: Attn: Mr. Tim Carr
HydroEnvironmental Solutions, Inc.
One Deans Bridge Rd
Somers NY 10589

| Sample Information | | Custody Information | | Date | Time |
|---|---|---|---|---|---|
| Matrix: | SOLID | Collected by: | RG | 02/26/15 | |
| Location Code: | HESNY-TUCK | Received by: | SW | 03/02/15 | 15:48 |
| Rush Request: | 72 Hour | Analyzed by: | see "By" below | | |
| P.O.#: | | | | | |

## Laboratory Data

SDG ID: GBH78384
Phoenix ID: BH78384

Project ID: 109 MARBLEDALE RD TUCKAHOE NY
Client ID: TB-12 4-6

| Parameter | Result | | RL/ PQL | LOD/ MDL | Units | Dilution | Date/Time | By | Reference |
|---|---|---|---|---|---|---|---|---|---|
| Silver | < 0.38 | | 0.38 | 0.38 | mg/Kg | 1 | 03/03/15 | LK | SW6010C |
| Aluminum | 11400 | | 38 | 7.5 | mg/Kg | 10 | 03/03/15 | LK | SW6010C |
| Arsenic | 2.7 | | 0.8 | 0.75 | mg/Kg | 1 | 03/03/15 | LK | SW6010C |
| Barium | 92.2 | | 0.8 | 0.38 | mg/Kg | 1 | 03/03/15 | LK | SW6010C |
| Beryllium | 0.38 | | 0.30 | 0.15 | mg/Kg | 1 | 03/03/15 | LK | SW6010C |
| Calcium | 23900 | N | 38 | 35 | mg/Kg | 10 | 03/03/15 | LK | SW6010C |
| Cadmium | < 0.38 | | 0.38 | 0.15 | mg/Kg | 1 | 03/03/15 | LK | SW6010C |
| Cobalt | 10.2 | | 0.38 | 0.38 | mg/Kg | 1 | 03/03/15 | LK | SW6010C |
| Chromium | 25.9 | | 0.38 | 0.38 | mg/Kg | 1 | 03/03/15 | LK | SW6010C |
| Copper | 28.0 | | 0.38 | 0.38 | mg/kg | 1 | 03/03/15 | LK | SW6010C |
| Iron | 18600 | | 38 | 38 | mg/Kg | 10 | 03/03/15 | LK | SW6010C |
| Mercury | 0.10 | | 0.03 | 0.02 | mg/Kg | 1 | 03/03/15 | MA | SW7471B |
| Potassium | 3630 | N | 75 | 29 | mg/Kg | 10 | 03/03/15 | LK | SW6010C |
| Magnesium | 8150 | | 38 | 38 | mg/Kg | 10 | 03/03/15 | LK | SW6010C |
| Manganese | 297 | | 3.8 | 3.8 | mg/Kg | 10 | 03/03/15 | EK | SW6010C |
| Sodium | 209 | N | 8 | 3.2 | mg/Kg | 1 | 03/03/15 | LK | SW6010C |
| Nickel | 21.3 | | 0.38 | 0.38 | mg/Kg | 1 | 03/03/15 | LK | SW6010C |
| Lead | 37.4 | | 0.8 | 0.38 | mg/Kg | 1 | 03/03/15 | LK | SW6010C |
| Antimony | 2.0 | | 1.9 | 1.9 | mg/Kg | 1 | 03/03/15 | LK | SW6010C |
| Selenium | < 1.5 | | 1.5 | 1.3 | mg/Kg | 1 | 03/03/15 | LK | SW6010C |
| Thallium | < 1.5 | | 1.5 | 1.5 | mg/Kg | 1 | 03/03/15 | LK | SW6010C |
| Vanadium | 34.1 | | 0.4 | 0.38 | mg/Kg | 1 | 03/03/15 | LK | SW6010C |
| Zinc | 64.5 | | 0.8 | 0.38 | mg/Kg | 1 | 03/03/15 | LK | SW6010C |
| Percent Solid | 82 | | | | % | | 03/02/15 | i | SW846-%Solid |
| Total Cyanide | < 0.61 | | 0.61 | 0.30 | mg/Kg | 1 | 03/02/15 | O/EG | SW9012B |
| Soil Extraction for PCB | Completed | | | | | | 03/02/15 | CC/H | SW3545A |
| Soil Extraction for SVOA | Completed | | | | | | 03/02/15 | CJ/VH | SW3545A |
| Mercury Digestion | Completed | | | | | | 03/03/15 | I/I | SW7471B |

Project ID: 109 MARBLEDALE RD TUCKAHOE NY
Client ID: TB-12 4-6

Phoenix I.D.: BH78384

| Parameter | Result | | RL/ PQL | LOD/ MDL | Units | Dilution | Date/Time | By | Reference | |
|---|---|---|---|---|---|---|---|---|---|---|
| Total Metals Digest | Completed | | | | | | 03/02/15 | CB/AG | SW3050B | |
| **Polychlorinated Biphenyls** | | | | | | | | | | |
| PCB-1016 | ND | | 79 | 79 | ug/Kg | 2 | 03/03/15 | AW | SW8082A | |
| PCB-1221 | ND | | 79 | 79 | ug/Kg | 2 | 03/03/15 | AW | SW8082A | |
| PCB-1232 | ND | | 79 | 79 | ug/Kg | 2 | 03/03/15 | AW | SW8082A | |
| PCB-1242 | ND | | 79 | 79 | ug/Kg | 2 | 03/03/15 | AW | SW8082A | |
| PCB-1248 | ND | | 79 | 79 | ug/Kg | 2 | 03/03/15 | AW | SW8082A | |
| PCB-1254 | ND | | 79 | 79 | ug/Kg | 2 | 03/03/15 | AW | SW8082A | |
| PCB-1260 | ND | | 79 | 79 | ug/Kg | 2 | 03/03/15 | AW | SW8082A | |
| PCB-1262 | ND | | 79 | 79 | ug/Kg | 2 | 03/03/15 | AW | SW8082A | |
| PCB-1268 | ND | | 79 | 79 | ug/Kg | 2 | 03/03/15 | AW | SW8082A | |
| **QA/QC Surrogates** | | | | | | | | | | |
| % DCBP | 88 | | | | % | 2 | 03/03/15 | AW | 30 - 150 % | |
| % TCMX | 76 | | | | % | 2 | 03/03/15 | AW | 30 - 150 % | |
| **1,4-dioxane** | | | | | | | | | | |
| 1,4-dioxane | ND | | 82 | 82 | ug/kg | 1 | 03/04/15 | JLI | SW8260C | |
| **Volatiles** | | | | | | | | | | |
| 1,1,1-Trichloroethane | ND | | 4.1 | 0.41 | ug/Kg | 1 | 03/04/15 | JLI | SW8260C | |
| 1,1,2,2-Tetrachloroethane | ND | | 4.1 | 0.82 | ug/Kg | 1 | 03/04/15 | JLI | SW8260C | |
| 1,1,2-Trichloroethane | ND | | 4.1 | 0.82 | ug/Kg | 1 | 03/04/15 | JLI | SW8260C | |
| 1,1-Dichloroethane | ND | | 4.1 | 0.82 | ug/Kg | 1 | 03/04/15 | JLI | SW8260C | |
| 1,1-Dichloroethene | ND | | 4.1 | 0.41 | ug/Kg | 1 | 03/04/15 | JLI | SW8260C | |
| 1,2,3-Trichlorobenzene | ND | | 4.1 | 0.82 | ug/Kg | 1 | 03/04/15 | JLI | SW8260C | |
| 1,2,4-Trichlorobenzene | ND | | 4.1 | 0.82 | ug/Kg | 1 | 03/04/15 | JLI | SW8260C | |
| 1,2-Dibromo-3-chloropropane | ND | | 4.1 | 0.82 | ug/Kg | 1 | 03/04/15 | JLI | SW8260C | |
| 1,2-Dibromoethane | ND | | 4.1 | 0.41 | ug/Kg | 1 | 03/04/15 | JLI | SW8260C | |
| 1,2-Dichlorobenzene | ND | | 4.1 | 0.41 | ug/Kg | 1 | 03/04/15 | JLI | SW8260C | |
| 1,2-Dichloroethane | ND | | 4.1 | 0.41 | ug/Kg | 1 | 03/04/15 | JLI | SW8260C | |
| 1,2-Dichloropropane | ND | | 4.1 | 0.82 | ug/Kg | 1 | 03/04/15 | JLI | SW8260C | |
| 1,3-Dichlorobenzene | ND | | 4.1 | 0.41 | ug/Kg | 1 | 03/04/15 | JLI | SW8260C | |
| 1,4-Dichlorobenzene | ND | | 4.1 | 0.41 | ug/Kg | 1 | 03/04/15 | JLI | SW8260C | |
| 2-Hexanone | ND | | 20 | 4.1 | ug/Kg | 1 | 03/04/15 | JLI | SW8260C | |
| 4-Methyl-2-pentanone | ND | | 20 | 4.1 | ug/Kg | 1 | 03/04/15 | JLI | SW8260C | |
| Acetone | 72 | BS | 41 | 4.1 | ug/Kg | 1 | 03/04/15 | JLI | SW8260C | B* |
| Benzene | 1.6 | J | 4.1 | 0.41 | ug/Kg | 1 | 03/04/15 | JLI | SW8260C | |
| Bromochloromethane | ND | | 4.1 | 0.41 | ug/Kg | 1 | 03/04/15 | JLI | SW8260C | |
| Bromodichloromethane | ND | | 4.1 | 0.82 | ug/Kg | 1 | 03/04/15 | JLI | SW8260C | |
| Bromoform | ND | | 4.1 | 0.82 | ug/Kg | 1 | 03/04/15 | JLI | SW8260C | |
| Bromomethane | ND | | 4.1 | 1.6 | ug/Kg | 1 | 03/04/15 | JLI | SW8260C | |
| Carbon Disulfide | ND | | 4.1 | 0.82 | ug/Kg | 1 | 03/04/15 | JLI | SW8260C | |
| Carbon tetrachloride | ND | | 4.1 | 0.82 | ug/Kg | 1 | 03/04/15 | JLI | SW8260C | |
| Chlorobenzene | ND | | 4.1 | 4.1 | ug/Kg | 1 | 03/04/15 | JLI | SW8260C | |
| Chloroethane | ND | | 4.1 | 0.41 | ug/Kg | 1 | 03/04/15 | JLI | SW8260C | |
| Chloroform | ND | | 4.1 | 0.41 | ug/Kg | 1 | 03/04/15 | JLI | SW8260C | |
| Chloromethane | ND | | 4.1 | 0.82 | ug/Kg | 1 | 03/04/15 | JLI | SW8260C | |
| cis-1,2-Dichloroethene | ND | | 4.1 | 0.41 | ug/Kg | 1 | 03/04/15 | JLI | SW8260C | |
| cis-1,3-Dichloropropene | ND | | 4.1 | 0.41 | ug/Kg | 1 | 03/04/15 | JLI | SW8260C | |

Project ID: 109 MARBLEDALE RD TUCKAHOE NY
Client ID: TB-12 4-6

Phoenix I.D.: BH78384

| Parameter | Result | | RL/ PQL | LOD/ MDL | Units | Dilution | Date/Time | By | Reference |
|---|---|---|---|---|---|---|---|---|---|
| Cyclohexane | ND | | 4.1 | 0.82 | ug/Kg | 1 | 03/04/15 | JLI | SW8260C |
| Dibromochloromethane | ND | | 4.1 | 0.82 | ug/Kg | 1 | 03/04/15 | JLI | SW8260C |
| Dichlorodifluoromethane | ND | | 4.1 | 0.41 | ug/Kg | 1 | 03/04/15 | JLI | SW8260C |
| Ethylbenzene | 2.7 | J | 4.1 | 0.41 | ug/Kg | 1 | 03/04/15 | JLI | SW8260C |
| Isopropylbenzene | 3.2 | J | 4.1 | 0.41 | ug/Kg | 1 | 03/04/15 | JLI | SW8260C |
| m&p-Xylene | 11 | | 4.1 | 0.82 | ug/Kg | 1 | 03/04/15 | JLI | SW8260C |
| Methyl ethyl ketone | 10 | J | 25 | 4.1 | ug/Kg | 1 | 03/04/15 | JLI | SW8260C |
| Methyl t-butyl ether (MTBE) | ND | | 8.2 | 0.82 | ug/Kg | 1 | 03/04/15 | JLI | SW8260C |
| Methylacetate | ND | | 4.1 | 2.0 | ug/Kg | 1 | 03/04/15 | JLI | SW8260C |
| Methylcyclohexane | ND | | 4.1 | 0.82 | ug/Kg | 1 | 03/04/15 | JLI | SW8260C |
| Methylene chloride | ND | | 4.1 | 4.1 | ug/Kg | 1 | 03/04/15 | JLI | SW8260C |
| o-Xylene | 8.7 | | 4.1 | 0.82 | ug/Kg | 1 | 03/04/15 | JLI | SW8260C |
| Styrene | 0.63 | J | 4.1 | 0.41 | ug/Kg | 1 | 03/04/15 | JLI | SW8260C |
| Tetrachloroethene | ND | | 4.1 | 0.82 | ug/Kg | 1 | 03/04/15 | JLI | SW8260C |
| Toluene | 1.1 | J | 4.1 | 0.41 | ug/Kg | 1 | 03/04/15 | JLI | SW8260C |
| Total Xylenes | 19.7 | | 4.1 | 0.82 | ug/Kg | 1 | 03/04/15 | JLI | SW8260C |
| trans-1,2-Dichloroethene | ND | | 4.1 | 0.41 | ug/Kg | 1 | 03/04/15 | JLI | SW8260C |
| trans-1,3-Dichloropropene | ND | | 4.1 | 0.41 | ug/Kg | 1 | 03/04/15 | JLI | SW8260C |
| Trichloroethene | ND | | 4.1 | 0.41 | ug/Kg | 1 | 03/04/15 | JLI | SW8260C |
| Trichlorofluoromethane | ND | | 4.1 | 0.82 | ug/Kg | 1 | 03/04/15 | JLI | SW8260C |
| Trichlorotrifluoroethane | ND | | 4.1 | 0.41 | ug/Kg | 1 | 03/04/15 | JLI | SW8260C |
| Vinyl chloride | ND | | 4.1 | 0.41 | ug/Kg | 1 | 03/04/15 | JLI | SW8260C |
| **QA/QC Surrogates** | | | | | | | | | |
| % 1,2-dichlorobenzene-d4 | 100 | | | | % | 1 | 03/04/15 | JLI | 70 - 130 % |
| % Bromofluorobenzene | 92 | | | | % | 1 | 03/04/15 | JLI | 70 - 130 % |
| % Dibromofluoromethane | 77 | | | | % | 1 | 03/04/15 | JLI | 70 - 130 % |
| % Toluene-d8 | 95 | | | | % | 1 | 03/04/15 | JLI | 70 - 130 % |

## Semivolatiles

| | | | | | | | | | |
|---|---|---|---|---|---|---|---|---|---|
| 1,1-Biphenyl | 320 | J | 560 | 250 | ug/Kg | 2 | 03/03/15 | DD | SW8270D |
| 1,2,4,5-Tetrachlorobenzene | ND | | 560 | 280 | ug/Kg | 2 | 03/03/15 | DD | SW8270D |
| 2,3,4,6-tetrachlorophenol | ND | | 560 | 370 | ug/Kg | 2 | 03/03/15 | DD | SW8270D |
| 2,4,5-Trichlorophenol | ND | | 560 | 440 | ug/Kg | 2 | 03/03/15 | DD | SW8270D |
| 2,4,6-Trichlorophenol | ND | | 320 | 260 | ug/Kg | 2 | 03/03/15 | DD | SW8270D |
| 2,4-Dichlorophenol | ND | | 320 | 280 | ug/Kg | 2 | 03/03/15 | DD | SW8270D |
| 2,4-Dimethylphenol | ND | | 560 | 200 | ug/Kg | 2 | 03/03/15 | DD | SW8270D |
| 2,4-Dinitrophenol | ND | | 560 | 560 | ug/Kg | 2 | 03/03/15 | DD | SW8270D |
| 2,4-Dinitrotoluene | ND | | 320 | 320 | ug/Kg | 2 | 03/03/15 | DD | SW8270D |
| 2,6-Dinitrotoluene | ND | | 320 | 250 | ug/Kg | 2 | 03/03/15 | DD | SW8270D |
| 2-Chloronaphthalene | ND | | 560 | 230 | ug/Kg | 2 | 03/03/15 | DD | SW8270D |
| 2-Chlorophenol | ND | | 560 | 230 | ug/Kg | 2 | 03/03/15 | DD | SW8270D |
| 2-Methylnaphthalene | 1300 | | 560 | 240 | ug/Kg | 2 | 03/03/15 | DD | SW8270D |
| 2-Methylphenol (o-cresol) | ND | | 560 | 380 | ug/Kg | 2 | 03/03/15 | DD | SW8270D |
| 2-Nitroaniline | ND | | 4000 | 810 | ug/Kg | 2 | 03/03/15 | DD | SW8270D |
| 2-Nitrophenol | ND | | 560 | 510 | ug/Kg | 2 | 03/03/15 | DD | SW8270D |
| 3&4-Methylphenol (m&p-cresol) | ND | | 560 | 320 | ug/Kg | 2 | 03/03/15 | DD | SW8270D |
| 3,3'-Dichlorobenzidine | ND | | 320 | 320 | ug/Kg | 2 | 03/03/15 | DD | SW8270D |
| 3-Nitroaniline | ND | | 4000 | 1700 | ug/Kg | 2 | 03/03/15 | DD | SW8270D |
| 4,6-Dinitro-2-methylphenol | ND | | 560 | 560 | ug/Kg | 2 | 03/03/15 | DD | SW8270D |
| 4-Bromophenyl phenyl ether | ND | | 560 | 240 | ug/Kg | 2 | 03/03/15 | DD | SW8270D |

Project ID: 109 MARBLEDALE RD TUCKAHOE NY
Client ID: TB-12 4-6

Phoenix I.D.: BH78384

| Parameter | Result | | RL/ PQL | LOD/ MDL | Units | Dilution | Date/Time | By | Reference | |
|---|---|---|---|---|---|---|---|---|---|---|
| 4-Chloro-3-methylphenol | ND | | 560 | 280 | ug/Kg | 2 | 03/03/15 | DD | SW8270D | |
| 4-Chloroaniline | ND | | 1600 | 370 | ug/Kg | 2 | 03/03/15 | DD | SW8270D | |
| 4-Chlorophenyl phenyl ether | ND | | 560 | 270 | ug/Kg | 2 | 03/03/15 | DD | SW8270D | |
| 4-Nitroaniline | ND | | 4000 | 270 | ug/Kg | 2 | 03/03/15 | DD | SW8270D | |
| 4-Nitrophenol | ND | | 4000 | 360 | ug/Kg | 2 | 03/03/15 | DD | SW8270D | |
| Acenaphthene | ND | | 560 | 240 | ug/Kg | 2 | 03/03/15 | DD | SW8270D | |
| Acenaphthylene | ND | | 320 | 220 | ug/Kg | 2 | 03/03/15 | DD | SW8270D | |
| Acetophenone | ND | | 560 | 250 | ug/Kg | 2 | 03/03/15 | DD | SW8270D | |
| Anthracene | 640 | | 560 | 260 | ug/Kg | 2 | 03/03/15 | DD | SW8270D | |
| Atrazine | ND | | 320 | 320 | ug/Kg | 2 | 03/03/15 | DD | SW8270D | |
| Benz(a)anthracene | 1400 | | 560 | 270 | ug/Kg | 2 | 03/03/15 | DD | SW8270D | |
| Benzaldehyde | ND | | 560 | 240 | ug/Kg | 2 | 03/03/15 | DD | SW8270D | |
| Benzo(a)pyrene | 2100 | | 320 | 260 | ug/Kg | 2 | 03/03/15 | DD | SW8270D | |
| Benzo(b)fluoranthene | 2300 | | 560 | 270 | ug/Kg | 2 | 03/03/15 | DD | SW8270D | |
| Benzo(ghi)perylene | 1300 | | 560 | 260 | ug/Kg | 2 | 03/03/15 | DD | SW8270D | |
| Benzo(k)fluoranthene | 840 | | 560 | 270 | ug/Kg | 2 | 03/03/15 | DD | SW8270D | |
| Benzyl butyl phthalate | ND | | 560 | 210 | ug/Kg | 2 | 03/03/15 | DD | SW8270D | |
| Bis(2-chloroethoxy)methane | ND | | 560 | 220 | ug/Kg | 2 | 03/03/15 | DD | SW8270D | |
| Bis(2-chloroethyl)ether | ND | | 320 | 220 | ug/Kg | 2 | 03/03/15 | DD | SW8270D | |
| Bis(2-chloroisopropyl)ether | ND | | 560 | 220 | ug/Kg | 2 | 03/03/15 | DD | SW8270D | 1 |
| Bis(2-ethylhexyl)phthalate | 560 | | 560 | 230 | ug/Kg | 2 | 03/03/15 | DD | SW8270D | |
| Caprolactam | ND | | 560 | 560 | ug/Kg | 2 | 03/03/15 | DD | SW8270D | |
| Carbazole | ND | | 4000 | 610 | ug/Kg | 2 | 03/03/15 | DD | SW8270D | |
| Chrysene | 1500 | | 560 | 270 | ug/Kg | 2 | 03/03/15 | DD | SW8270D | |
| Dibenz(a,h)anthracene | 290 | J | 320 | 260 | ug/Kg | 2 | 03/03/15 | DD | SW8270D | |
| Dibenzofuran | ND | | 560 | 230 | ug/Kg | 2 | 03/03/15 | DD | SW8270D | |
| Diethyl phthalate | ND | | 560 | 250 | ug/Kg | 2 | 03/03/15 | DD | SW8270D | |
| Dimethylphthalate | ND | | 560 | 250 | ug/Kg | 2 | 03/03/15 | DD | SW8270D | |
| Di-n-butylphthalate | ND | | 560 | 210 | ug/Kg | 2 | 03/03/15 | DD | SW8270D | |
| Di-n-octylphthalate | ND | | 560 | 210 | ug/Kg | 2 | 03/03/15 | DD | SW8270D | |
| Fluoranthene | 2500 | | 560 | 260 | ug/Kg | 2 | 03/03/15 | DD | SW8270D | |
| Fluorene | ND | | 560 | 260 | ug/Kg | 2 | 03/03/15 | DD | SW8270D | |
| Hexachlorobenzene | ND | | 320 | 230 | ug/Kg | 2 | 03/03/15 | DD | SW8270D | |
| Hexachlorobutadiene | ND | | 560 | 290 | ug/Kg | 2 | 03/03/15 | DD | SW8270D | |
| Hexachlorocyclopentadiene | ND | | 560 | 250 | ug/Kg | 2 | 03/03/15 | DD | SW8270D | |
| Hexachloroethane | ND | | 320 | 240 | ug/Kg | 2 | 03/03/15 | DD | SW8270D | |
| Indeno(1,2,3-cd)pyrene | 1200 | | 560 | 270 | ug/Kg | 2 | 03/03/15 | DD | SW8270D | |
| Isophorone | ND | | 320 | 220 | ug/Kg | 2 | 03/03/15 | DD | SW8270D | |
| Naphthalene | ND | | 560 | 230 | ug/Kg | 2 | 03/03/15 | DD | SW8270D | |
| Nitrobenzene | ND | | 320 | 280 | ug/Kg | 2 | 03/03/15 | DD | SW8270D | |
| N-Nitrosodimethylamine | ND | | 560 | 230 | ug/Kg | 2 | 03/03/15 | DD | SW8270D | |
| N-Nitrosodi-n-propylamine | ND | | 320 | 260 | ug/Kg | 2 | 03/03/15 | DD | SW8270D | |
| N-Nitrosodiphenylamine | ND | | 320 | 310 | ug/Kg | 2 | 03/03/15 | DD | SW8270D | |
| Pentachlorophenol | ND | | 560 | 300 | ug/Kg | 2 | 03/03/15 | DD | SW8270D | |
| Phenanthrene | 1900 | | 320 | 230 | ug/Kg | 2 | 03/03/15 | DD | SW8270D | |
| Phenol | ND | | 560 | 260 | ug/Kg | 2 | 03/03/15 | DD | SW8270D | |
| Pyrene | 3500 | | 560 | 280 | ug/Kg | 2 | 03/03/15 | DD | SW8270D | |
| **QA/QC Surrogates** | | | | | | | | | | |
| % 2,4,6-Tribromophenol | 54 | | | | % | 2 | 03/03/15 | DD | 19 - 122 % | |

Project ID: 109 MARBLEDALE RD TUCKAHOE NY
Client ID: TB-12 4-6

Phoenix I.D.: BH78384

| Parameter | Result | RL/ PQL | LOD/ MDL | Units | Dilution | Date/Time | By | Reference |
|---|---|---|---|---|---|---|---|---|
| % 2-Fluorobiphenyl | 68 | | | % | 2 | 03/03/15 | DD | 30 - 115 % |
| % 2-Fluorophenol | 60 | | | % | 2 | 03/03/15 | DD | 25 - 121 % |
| % Nitrobenzene-d5 | 64 | | | % | 2 | 03/03/15 | DD | 23 - 120 % |
| % Phenol-d5 | 62 | | | % | 2 | 03/03/15 | DD | 24 - 113 % |
| % Terphenyl-d14 | 94 | | | % | 2 | 03/03/15 | DD | 18 - 137 % |

1 = This parameter is not certified by NY NELAC for this matrix. NY NELAC does not offer certification for all parameters at this time.
B* = Present in blank, a bias is possible.

**RL/PQL=Reporting/Practical Quantitation Level (Equivalent to NELAC LOQ, Limit of Quanitation) ND=Not Detected**
**BRL=Below Reporting Level J=Estimated Below RL LOD=Limit of Detection MDL=Method Detection Limit**

## Comments:

Please be advised that the NY 375 soil criteria for chromium are based on hexavalent chromium and trivalent chromium.

All soils, solids and sludges are reported on a dry weight basis unless otherwise noted in the sample comments.

If there are any questions regarding this data, please call Phoenix Client Services at extension 200.
This report must not be reproduced except in full as defined by the attached chain of custody.

**Phyllis Shiller, Laboratory Director**
**May 01, 2015**
**Reviewed and Released by: Tina Covensky**

PHOENIX

Environmental Laboratories, Inc.
587 East Middle Turnpike, P.O.Box 370, Manchester, CT 06045
Tel. (860) 645-1102 Fax (860) 645-0823

ACCREDITED IN ACCORDANCE WITH nelac NY # 11301

# Analysis Report

May 01, 2015

FOR: Attn: Mr. Tim Carr
HydroEnvironmental Solutions, Inc.
One Deans Bridge Rd
Somers NY 10589

| Sample Information | | Custody Information | | Date | Time |
|---|---|---|---|---|---|
| Matrix: | SOLID | Collected by: | RG | 02/26/15 | |
| Location Code: | HESNY-TUCK | Received by: | SW | 03/02/15 | 15:48 |
| Rush Request: | 72 Hour | Analyzed by: | see "By" below | | |
| P.O.#: | | | | | |

## Laboratory Data

SDG ID: GBH78384
Phoenix ID: BH78385

Project ID: 109 MARBLEDALE RD TUCKAHOE NY
Client ID: TB-12 28-30

| Parameter | Result | | RL/ PQL | LOD/ MDL | Units | Dilution | Date/Time | By | Reference |
|---|---|---|---|---|---|---|---|---|---|
| Silver | < 0.37 | | 0.37 | 0.37 | mg/Kg | 1 | 03/03/15 | LK | SW6010C |
| Aluminum | 24900 | | 370 | 73 | mg/Kg | 100 | 03/04/15 | LK | SW6010C |
| Arsenic | 1.5 | | 0.7 | 0.73 | mg/Kg | 1 | 03/03/15 | LK | SW6010C |
| Barium | 157 | | 0.7 | 0.37 | mg/Kg | 1 | 03/03/15 | LK | SW6010C |
| Beryllium | 0.54 | | 0.29 | 0.15 | mg/Kg | 1 | 03/03/15 | LK | SW6010C |
| Calcium | 11200 | N | 37 | 34 | mg/Kg | 10 | 03/03/15 | LK | SW6010C |
| Cadmium | < 0.37 | | 0.37 | 0.15 | mg/Kg | 1 | 03/03/15 | LK | SW6010C |
| Cobalt | 15.0 | | 0.37 | 0.37 | mg/Kg | 1 | 03/03/15 | LK | SW6010C |
| Chromium | 37.8 | | 0.37 | 0.37 | mg/Kg | 1 | 03/03/15 | LK | SW6010C |
| Copper | 107 | | 0.37 | 0.37 | mg/kg | 1 | 03/03/15 | LK | SW6010C |
| Iron | 28800 | | 37 | 37 | mg/Kg | 10 | 03/03/15 | LK | SW6010C |
| Mercury | 0.10 | | 0.03 | 0.02 | mg/Kg | 1 | 03/03/15 | MA | SW7471B |
| Potassium | 5300 | N | 73 | 29 | mg/Kg | 10 | 03/03/15 | LK | SW6010C |
| Magnesium | 11100 | | 37 | 37 | mg/Kg | 10 | 03/03/15 | LK | SW6010C |
| Manganese | 380 | | 3.7 | 3.7 | mg/Kg | 10 | 03/03/15 | EK | SW6010C |
| Sodium | 312 | N | 7 | 3.2 | mg/Kg | 1 | 03/03/15 | LK | SW6010C |
| Nickel | 28.9 | | 0.37 | 0.37 | mg/Kg | 1 | 03/03/15 | LK | SW6010C |
| Lead | 95.8 | | 0.7 | 0.37 | mg/Kg | 1 | 03/03/15 | LK | SW6010C |
| Antimony | < 1.8 | | 1.8 | 1.8 | mg/Kg | 1 | 03/03/15 | LK | SW6010C |
| Selenium | < 1.5 | | 1.5 | 1.2 | mg/Kg | 1 | 03/03/15 | LK | SW6010C |
| Thallium | < 1.5 | | 1.5 | 1.5 | mg/Kg | 1 | 03/03/15 | LK | SW6010C |
| Vanadium | 47.9 | | 0.4 | 0.37 | mg/Kg | 1 | 03/03/15 | LK | SW6010C |
| Zinc | 168 | | 7.3 | 3.7 | mg/Kg | 10 | 03/03/15 | LK | SW6010C |
| Percent Solid | 84 | | | | % | | 03/02/15 | i | SW846-%Solid |
| Total Cyanide | < 0.54 | | 0.54 | 0.27 | mg/Kg | 1 | 03/02/15 | O/EG | SW9012B |
| Soil Extraction for PCB | Completed | | | | | | 03/02/15 | CC/H | SW3545A |
| Soil Extraction for SVOA | Completed | | | | | | 03/02/15 | CJ/VH | SW3545A |
| Mercury Digestion | Completed | | | | | | 03/03/15 | I/I | SW7471B |

Project ID: 109 MARBLEDALE RD TUCKAHOE NY
Client ID: TB-12 28-30

Phoenix I.D.: BH78385

| Parameter | Result | | RL/ PQL | LOD/ MDL | Units | Dilution | Date/Time | By | Reference |
|---|---|---|---|---|---|---|---|---|---|
| Total Metals Digest | Completed | | | | | | 03/02/15 | CB/AG | SW3050B |
| **Polychlorinated Biphenyls** | | | | | | | | | |
| PCB-1016 | ND | | 78 | 78 | ug/Kg | 2 | 03/03/15 | AW | SW8082A |
| PCB-1221 | ND | | 78 | 78 | ug/Kg | 2 | 03/03/15 | AW | SW8082A |
| PCB-1232 | ND | | 78 | 78 | ug/Kg | 2 | 03/03/15 | AW | SW8082A |
| PCB-1242 | ND | | 78 | 78 | ug/Kg | 2 | 03/03/15 | AW | SW8082A |
| PCB-1248 | ND | | 78 | 78 | ug/Kg | 2 | 03/03/15 | AW | SW8082A |
| PCB-1254 | ND | | 78 | 78 | ug/Kg | 2 | 03/03/15 | AW | SW8082A |
| PCB-1260 | ND | | 78 | 78 | ug/Kg | 2 | 03/03/15 | AW | SW8082A |
| PCB-1262 | ND | | 78 | 78 | ug/Kg | 2 | 03/03/15 | AW | SW8082A |
| PCB-1268 | ND | | 78 | 78 | ug/Kg | 2 | 03/03/15 | AW | SW8082A |
| **QA/QC Surrogates** | | | | | | | | | |
| % DCBP | 81 | | | | % | 2 | 03/03/15 | AW | 30 - 150 % |
| % TCMX | 77 | | | | % | 2 | 03/03/15 | AW | 30 - 150 % |
| **1,4-dioxane** | | | | | | | | | |
| 1,4-dioxane | ND | | 100 | 100 | ug/kg | 1 | 03/03/15 | JLI | SW8260C |
| **Volatiles** | | | | | | | | | |
| 1,1,1-Trichloroethane | ND | | 5.1 | 0.51 | ug/Kg | 1 | 03/03/15 | JLI | SW8260C |
| 1,1,2,2-Tetrachloroethane | ND | | 5.1 | 1.0 | ug/Kg | 1 | 03/03/15 | JLI | SW8260C |
| 1,1,2-Trichloroethane | ND | | 5.1 | 1.0 | ug/Kg | 1 | 03/03/15 | JLI | SW8260C |
| 1,1-Dichloroethane | ND | | 5.1 | 1.0 | ug/Kg | 1 | 03/03/15 | JLI | SW8260C |
| 1,1-Dichloroethene | ND | | 5.1 | 0.51 | ug/Kg | 1 | 03/03/15 | JLI | SW8260C |
| 1,2,3-Trichlorobenzene | ND | | 5.1 | 1.0 | ug/Kg | 1 | 03/03/15 | JLI | SW8260C |
| 1,2,4-Trichlorobenzene | ND | | 5.1 | 1.0 | ug/Kg | 1 | 03/03/15 | JLI | SW8260C |
| 1,2-Dibromo-3-chloropropane | ND | | 5.1 | 1.0 | ug/Kg | 1 | 03/03/15 | JLI | SW8260C |
| 1,2-Dibromoethane | ND | | 5.1 | 0.51 | ug/Kg | 1 | 03/03/15 | JLI | SW8260C |
| 1,2-Dichlorobenzene | ND | | 5.1 | 0.51 | ug/Kg | 1 | 03/03/15 | JLI | SW8260C |
| 1,2-Dichloroethane | ND | | 5.1 | 0.51 | ug/Kg | 1 | 03/03/15 | JLI | SW8260C |
| 1,2-Dichloropropane | ND | | 5.1 | 1.0 | ug/Kg | 1 | 03/03/15 | JLI | SW8260C |
| 1,3-Dichlorobenzene | ND | | 5.1 | 0.51 | ug/Kg | 1 | 03/03/15 | JLI | SW8260C |
| 1,4-Dichlorobenzene | ND | | 5.1 | 0.51 | ug/Kg | 1 | 03/03/15 | JLI | SW8260C |
| 2-Hexanone | ND | | 25 | 5.1 | ug/Kg | 1 | 03/03/15 | JLI | SW8260C |
| 4-Methyl-2-pentanone | ND | | 25 | 5.1 | ug/Kg | 1 | 03/03/15 | JLI | SW8260C |
| Acetone | 62 | S | 51 | 5.1 | ug/Kg | 1 | 03/03/15 | JLI | SW8260C |
| Benzene | 1.1 | J | 5.1 | 0.51 | ug/Kg | 1 | 03/03/15 | JLI | SW8260C |
| Bromochloromethane | ND | | 5.1 | 0.51 | ug/Kg | 1 | 03/03/15 | JLI | SW8260C |
| Bromodichloromethane | ND | | 5.1 | 1.0 | ug/Kg | 1 | 03/03/15 | JLI | SW8260C |
| Bromoform | ND | | 5.1 | 1.0 | ug/Kg | 1 | 03/03/15 | JLI | SW8260C |
| Bromomethane | ND | | 5.1 | 2.0 | ug/Kg | 1 | 03/03/15 | JLI | SW8260C |
| Carbon Disulfide | ND | | 5.1 | 1.0 | ug/Kg | 1 | 03/03/15 | JLI | SW8260C |
| Carbon tetrachloride | ND | | 5.1 | 1.0 | ug/Kg | 1 | 03/03/15 | JLI | SW8260C |
| Chlorobenzene | ND | | 5.1 | 5.1 | ug/Kg | 1 | 03/03/15 | JLI | SW8260C |
| Chloroethane | ND | | 5.1 | 0.51 | ug/Kg | 1 | 03/03/15 | JLI | SW8260C |
| Chloroform | ND | | 5.1 | 0.51 | ug/Kg | 1 | 03/03/15 | JLI | SW8260C |
| Chloromethane | ND | | 5.1 | 1.0 | ug/Kg | 1 | 03/03/15 | JLI | SW8260C |
| cis-1,2-Dichloroethene | ND | | 5.1 | 0.51 | ug/Kg | 1 | 03/03/15 | JLI | SW8260C |
| cis-1,3-Dichloropropene | ND | | 5.1 | 0.51 | ug/Kg | 1 | 03/03/15 | JLI | SW8260C |

Project ID: 109 MARBLEDALE RD TUCKAHOE NY
Client ID: TB-12 28-30

Phoenix I.D.: BH78385

| Parameter | Result | | RL/ PQL | LOD/ MDL | Units | Dilution | Date/Time | By | Reference |
|---|---|---|---|---|---|---|---|---|---|
| Cyclohexane | ND | | 5.1 | 1.0 | ug/Kg | 1 | 03/03/15 | JLI | SW8260C |
| Dibromochloromethane | ND | | 5.1 | 1.0 | ug/Kg | 1 | 03/03/15 | JLI | SW8260C |
| Dichlorodifluoromethane | ND | | 5.1 | 0.51 | ug/Kg | 1 | 03/03/15 | JLI | SW8260C |
| Ethylbenzene | ND | | 5.1 | 0.51 | ug/Kg | 1 | 03/03/15 | JLI | SW8260C |
| Isopropylbenzene | ND | | 5.1 | 0.51 | ug/Kg | 1 | 03/03/15 | JLI | SW8260C |
| m&p-Xylene | ND | | 5.1 | 1.0 | ug/Kg | 1 | 03/03/15 | JLI | SW8260C |
| Methyl ethyl ketone | ND | | 30 | 5.1 | ug/Kg | 1 | 03/03/15 | JLI | SW8260C |
| Methyl t-butyl ether (MTBE) | ND | | 10 | 1.0 | ug/Kg | 1 | 03/03/15 | JLI | SW8260C |
| Methylacetate | ND | | 5.1 | 2.5 | ug/Kg | 1 | 03/03/15 | JLI | SW8260C |
| Methylcyclohexane | ND | | 5.1 | 1.0 | ug/Kg | 1 | 03/03/15 | JLI | SW8260C |
| Methylene chloride | ND | | 5.1 | 5.1 | ug/Kg | 1 | 03/03/15 | JLI | SW8260C |
| o-Xylene | ND | | 5.1 | 1.0 | ug/Kg | 1 | 03/03/15 | JLI | SW8260C |
| Styrene | ND | | 5.1 | 0.51 | ug/Kg | 1 | 03/03/15 | JLI | SW8260C |
| Tetrachloroethene | ND | | 5.1 | 1.0 | ug/Kg | 1 | 03/03/15 | JLI | SW8260C |
| Toluene | ND | | 5.1 | 0.51 | ug/Kg | 1 | 03/03/15 | JLI | SW8260C |
| Total Xylenes | ND | | 5.1 | 1.0 | ug/Kg | 1 | 03/03/15 | JLI | SW8260C |
| trans-1,2-Dichloroethene | ND | | 5.1 | 0.51 | ug/Kg | 1 | 03/03/15 | JLI | SW8260C |
| trans-1,3-Dichloropropene | ND | | 5.1 | 0.51 | ug/Kg | 1 | 03/03/15 | JLI | SW8260C |
| Trichloroethene | ND | | 5.1 | 0.51 | ug/Kg | 1 | 03/03/15 | JLI | SW8260C |
| Trichlorofluoromethane | ND | | 5.1 | 1.0 | ug/Kg | 1 | 03/03/15 | JLI | SW8260C |
| Trichlorotrifluoroethane | ND | | 5.1 | 0.51 | ug/Kg | 1 | 03/03/15 | JLI | SW8260C |
| Vinyl chloride | ND | | 5.1 | 0.51 | ug/Kg | 1 | 03/03/15 | JLI | SW8260C |
| **QA/QC Surrogates** | | | | | | | | | |
| % 1,2-dichlorobenzene-d4 | 100 | | | | % | 1 | 03/03/15 | JLI | 70 - 130 % |
| % Bromofluorobenzene | 100 | | | | % | 1 | 03/03/15 | JLI | 70 - 130 % |
| % Dibromofluoromethane | 96 | | | | % | 1 | 03/03/15 | JLI | 70 - 130 % |
| % Toluene-d8 | 97 | | | | % | 1 | 03/03/15 | JLI | 70 - 130 % |

## Semivolatiles

| | | | | | | | | | |
|---|---|---|---|---|---|---|---|---|---|
| 1,1-Biphenyl | ND | | 270 | 120 | ug/Kg | 1 | 03/02/15 | DD | SW8270D |
| 1,2,4,5-Tetrachlorobenzene | ND | | 270 | 140 | ug/Kg | 1 | 03/02/15 | DD | SW8270D |
| 2,3,4,6-tetrachlorophenol | ND | | 270 | 180 | ug/Kg | 1 | 03/02/15 | DD | SW8270D |
| 2,4,5-Trichlorophenol | ND | | 270 | 210 | ug/Kg | 1 | 03/02/15 | DD | SW8270D |
| 2,4,6-Trichlorophenol | ND | | 150 | 120 | ug/Kg | 1 | 03/02/15 | DD | SW8270D |
| 2,4-Dichlorophenol | ND | | 150 | 140 | ug/Kg | 1 | 03/02/15 | DD | SW8270D |
| 2,4-Dimethylphenol | ND | | 270 | 96 | ug/Kg | 1 | 03/02/15 | DD | SW8270D |
| 2,4-Dinitrophenol | ND | | 270 | 270 | ug/Kg | 1 | 03/02/15 | DD | SW8270D |
| 2,4-Dinitrotoluene | ND | | 150 | 150 | ug/Kg | 1 | 03/02/15 | DD | SW8270D |
| 2,6-Dinitrotoluene | ND | | 150 | 120 | ug/Kg | 1 | 03/02/15 | DD | SW8270D |
| 2-Chloronaphthalene | ND | | 270 | 110 | ug/Kg | 1 | 03/02/15 | DD | SW8270D |
| 2-Chlorophenol | ND | | 270 | 110 | ug/Kg | 1 | 03/02/15 | DD | SW8270D |
| 2-Methylnaphthalene | 150 | J | 270 | 110 | ug/Kg | 1 | 03/02/15 | DD | SW8270D |
| 2-Methylphenol (o-cresol) | ND | | 270 | 180 | ug/Kg | 1 | 03/02/15 | DD | SW8270D |
| 2-Nitroaniline | ND | | 1900 | 390 | ug/Kg | 1 | 03/02/15 | DD | SW8270D |
| 2-Nitrophenol | ND | | 270 | 240 | ug/Kg | 1 | 03/02/15 | DD | SW8270D |
| 3&4-Methylphenol (m&p-cresol) | ND | | 270 | 150 | ug/Kg | 1 | 03/02/15 | DD | SW8270D |
| 3,3'-Dichlorobenzidine | ND | | 150 | 150 | ug/Kg | 1 | 03/02/15 | DD | SW8270D |
| 3-Nitroaniline | ND | | 1900 | 840 | ug/Kg | 1 | 03/02/15 | DD | SW8270D |
| 4,6-Dinitro-2-methylphenol | ND | | 270 | 270 | ug/Kg | 1 | 03/02/15 | DD | SW8270D |
| 4-Bromophenyl phenyl ether | ND | | 270 | 110 | ug/Kg | 1 | 03/02/15 | DD | SW8270D |

Project ID: 109 MARBLEDALE RD TUCKAHOE NY
Client ID: TB-12 28-30

Phoenix I.D.: BH78385

| Parameter | Result | | RL/ PQL | LOD/ MDL | Units | Dilution | Date/Time | By | Reference | |
|---|---|---|---|---|---|---|---|---|---|---|
| 4-Chloro-3-methylphenol | ND | | 270 | 140 | ug/Kg | 1 | 03/02/15 | DD | SW8270D | |
| 4-Chloroaniline | ND | | 770 | 180 | ug/Kg | 1 | 03/02/15 | DD | SW8270D | |
| 4-Chlorophenyl phenyl ether | ND | | 270 | 130 | ug/Kg | 1 | 03/02/15 | DD | SW8270D | |
| 4-Nitroaniline | ND | | 1900 | 130 | ug/Kg | 1 | 03/02/15 | DD | SW8270D | |
| 4-Nitrophenol | ND | | 1900 | 170 | ug/Kg | 1 | 03/02/15 | DD | SW8270D | |
| Acenaphthene | 270 | J | 270 | 120 | ug/Kg | 1 | 03/02/15 | DD | SW8270D | |
| Acenaphthylene | ND | | 150 | 110 | ug/Kg | 1 | 03/02/15 | DD | SW8270D | |
| Acetophenone | ND | | 270 | 120 | ug/Kg | 1 | 03/02/15 | DD | SW8270D | |
| Anthracene | 570 | | 270 | 130 | ug/Kg | 1 | 03/02/15 | DD | SW8270D | |
| Atrazine | ND | | 150 | 150 | ug/Kg | 1 | 03/02/15 | DD | SW8270D | |
| Benz(a)anthracene | 860 | | 270 | 130 | ug/Kg | 1 | 03/02/15 | DD | SW8270D | |
| Benzaldehyde | ND | | 270 | 110 | ug/Kg | 1 | 03/02/15 | DD | SW8270D | |
| Benzo(a)pyrene | 750 | | 150 | 130 | ug/Kg | 1 | 03/02/15 | DD | SW8270D | |
| Benzo(b)fluoranthene | 980 | | 270 | 130 | ug/Kg | 1 | 03/02/15 | DD | SW8270D | |
| Benzo(ghi)perylene | 490 | | 270 | 120 | ug/Kg | 1 | 03/02/15 | DD | SW8270D | |
| Benzo(k)fluoranthene | 420 | | 270 | 130 | ug/Kg | 1 | 03/02/15 | DD | SW8270D | |
| Benzyl butyl phthalate | ND | | 270 | 99 | ug/Kg | 1 | 03/02/15 | DD | SW8270D | |
| Bis(2-chloroethoxy)methane | ND | | 270 | 110 | ug/Kg | 1 | 03/02/15 | DD | SW8270D | |
| Bis(2-chloroethyl)ether | ND | | 150 | 100 | ug/Kg | 1 | 03/02/15 | DD | SW8270D | |
| Bis(2-chloroisopropyl)ether | ND | | 270 | 110 | ug/Kg | 1 | 03/02/15 | DD | SW8270D | 1 |
| Bis(2-ethylhexyl)phthalate | 640 | | 270 | 110 | ug/Kg | 1 | 03/02/15 | DD | SW8270D | |
| Caprolactam | ND | | 270 | 270 | ug/Kg | 1 | 03/02/15 | DD | SW8270D | |
| Carbazole | 830 | J | 1900 | 290 | ug/Kg | 1 | 03/02/15 | DD | SW8270D | |
| Chrysene | 940 | | 270 | 130 | ug/Kg | 1 | 03/02/15 | DD | SW8270D | |
| Dibenz(a,h)anthracene | ND | | 150 | 120 | ug/Kg | 1 | 03/02/15 | DD | SW8270D | |
| Dibenzofuran | 280 | | 270 | 110 | ug/Kg | 1 | 03/02/15 | DD | SW8270D | |
| Diethyl phthalate | ND | | 270 | 120 | ug/Kg | 1 | 03/02/15 | DD | SW8270D | |
| Dimethylphthalate | ND | | 270 | 120 | ug/Kg | 1 | 03/02/15 | DD | SW8270D | |
| Di-n-butylphthalate | ND | | 270 | 100 | ug/Kg | 1 | 03/02/15 | DD | SW8270D | |
| Di-n-octylphthalate | ND | | 270 | 99 | ug/Kg | 1 | 03/02/15 | DD | SW8270D | |
| Fluoranthene | 2600 | | 270 | 120 | ug/Kg | 1 | 03/02/15 | DD | SW8270D | |
| Fluorene | 400 | | 270 | 130 | ug/Kg | 1 | 03/02/15 | DD | SW8270D | |
| Hexachlorobenzene | ND | | 150 | 110 | ug/Kg | 1 | 03/02/15 | DD | SW8270D | |
| Hexachlorobutadiene | ND | | 270 | 140 | ug/Kg | 1 | 03/02/15 | DD | SW8270D | |
| Hexachlorocyclopentadiene | ND | | 270 | 120 | ug/Kg | 1 | 03/02/15 | DD | SW8270D | |
| Hexachloroethane | ND | | 150 | 120 | ug/Kg | 1 | 03/02/15 | DD | SW8270D | |
| Indeno(1,2,3-cd)pyrene | 420 | | 270 | 130 | ug/Kg | 1 | 03/02/15 | DD | SW8270D | |
| Isophorone | ND | | 150 | 110 | ug/Kg | 1 | 03/02/15 | DD | SW8270D | |
| Naphthalene | ND | | 270 | 110 | ug/Kg | 1 | 03/02/15 | DD | SW8270D | |
| Nitrobenzene | ND | | 150 | 130 | ug/Kg | 1 | 03/02/15 | DD | SW8270D | |
| N-Nitrosodimethylamine | ND | | 270 | 110 | ug/Kg | 1 | 03/02/15 | DD | SW8270D | |
| N-Nitrosodi-n-propylamine | ND | | 150 | 120 | ug/Kg | 1 | 03/02/15 | DD | SW8270D | |
| N-Nitrosodiphenylamine | ND | | 150 | 150 | ug/Kg | 1 | 03/02/15 | DD | SW8270D | |
| Pentachlorophenol | ND | | 270 | 150 | ug/Kg | 1 | 03/02/15 | DD | SW8270D | |
| Phenanthrene | 2500 | | 150 | 110 | ug/Kg | 1 | 03/02/15 | DD | SW8270D | |
| Phenol | ND | | 270 | 120 | ug/Kg | 1 | 03/02/15 | DD | SW8270D | |
| Pyrene | 2200 | | 270 | 130 | ug/Kg | 1 | 03/02/15 | DD | SW8270D | |
| **QA/QC Surrogates** | | | | | | | | | | |
| % 2,4,6-Tribromophenol | 89 | | | | % | 1 | 03/02/15 | DD | 19 - 122 % | |

Project ID: 109 MARBLEDALE RD TUCKAHOE NY
Client ID: TB-12 28-30

Phoenix I.D.: BH78385

| Parameter | Result | RL/ PQL | LOD/ MDL | Units | Dilution | Date/Time | By | Reference |
|---|---|---|---|---|---|---|---|---|
| % 2-Fluorobiphenyl | 83 | | | % | 1 | 03/02/15 | DD | 30 - 115 % |
| % 2-Fluorophenol | 74 | | | % | 1 | 03/02/15 | DD | 25 - 121 % |
| % Nitrobenzene-d5 | 78 | | | % | 1 | 03/02/15 | DD | 23 - 120 % |
| % Phenol-d5 | 77 | | | % | 1 | 03/02/15 | DD | 24 - 113 % |
| % Terphenyl-d14 | 117 | | | % | 1 | 03/02/15 | DD | 18 - 137 % |

1 = This parameter is not certified by NY NELAC for this matrix. NY NELAC does not offer certification for all parameters at this time.

**RL/PQL=Reporting/Practical Quantitation Level (Equivalent to NELAC LOQ, Limit of Quanitation) ND=Not Detected**
**BRL=Below Reporting Level J=Estimated Below RL LOD=Limit of Detection MDL=Method Detection Limit**

## Comments:

Please be advised that the NY 375 soil criteria for chromium are based on hexavalent chromium and trivalent chromium.

All soils, solids and sludges are reported on a dry weight basis unless otherwise noted in the sample comments.

If there are any questions regarding this data, please call Phoenix Client Services at extension 200.
This report must not be reproduced except in full as defined by the attached chain of custody.

**Phyllis Shiller, Laboratory Director**
**May 01, 2015**
**Reviewed and Released by: Tina Covensky**

PHOENIX

Environmental Laboratories, Inc.
587 East Middle Turnpike, P.O.Box 370, Manchester, CT 06045
Tel. (860) 645-1102 Fax (860) 645-0823

ACCREDITED IN ACCORDANCE WITH nelac NY # 11301

# Analysis Report

May 01, 2015

FOR: Attn: Mr. Tim Carr
HydroEnvironmental Solutions, Inc.
One Deans Bridge Rd
Somers NY 10589

| Sample Information | | Custody Information | | Date | Time |
|---|---|---|---|---|---|
| Matrix: | SOLID | Collected by: | RG | 02/27/15 | |
| Location Code: | HESNY-TUCK | Received by: | SW | 03/02/15 | 15:48 |
| Rush Request: | 72 Hour | Analyzed by: | see "By" below | | |
| P.O.#: | | | | | |

## Laboratory Data

SDG ID: GBH78384
Phoenix ID: BH78386

Project ID: 109 MARBLEDALE RD TUCKAHOE NY
Client ID: TB-11 4-6

| Parameter | Result | | RL/ PQL | LOD/ MDL | Units | Dilution | Date/Time | By | Reference |
|---|---|---|---|---|---|---|---|---|---|
| Silver | < 0.39 | | 0.39 | 0.39 | mg/Kg | 1 | 03/03/15 | LK | SW6010C |
| Aluminum | 8040 | | 39 | 7.8 | mg/Kg | 10 | 03/04/15 | LK | SW6010C |
| Arsenic | 2.8 | | 0.8 | 0.78 | mg/Kg | 1 | 03/03/15 | LK | SW6010C |
| Barium | 57.6 | | 0.8 | 0.39 | mg/Kg | 1 | 03/03/15 | LK | SW6010C |
| Beryllium | < 0.31 | | 0.31 | 0.16 | mg/Kg | 1 | 03/03/15 | LK | SW6010C |
| Calcium | 37000 | N | 39 | 36 | mg/Kg | 10 | 03/04/15 | LK | SW6010C |
| Cadmium | < 0.39 | | 0.39 | 0.16 | mg/Kg | 1 | 03/03/15 | LK | SW6010C |
| Cobalt | 8.80 | | 0.39 | 0.39 | mg/Kg | 1 | 03/03/15 | LK | SW6010C |
| Chromium | 17.0 | | 0.39 | 0.39 | mg/Kg | 1 | 03/03/15 | LK | SW6010C |
| Copper | 72.0 | | 0.39 | 0.39 | mg/kg | 1 | 03/03/15 | LK | SW6010C |
| Iron | 18300 | | 39 | 39 | mg/Kg | 10 | 03/04/15 | LK | SW6010C |
| Mercury | 0.03 | | 0.03 | 0.02 | mg/Kg | 1 | 03/03/15 | MA | SW7471B |
| Potassium | 1940 | N | 8 | 3.0 | mg/Kg | 1 | 03/03/15 | LK | SW6010C |
| Magnesium | 15000 | | 39 | 39 | mg/Kg | 10 | 03/04/15 | LK | SW6010C |
| Manganese | 201 | | 3.9 | 3.9 | mg/Kg | 10 | 03/04/15 | LK | SW6010C |
| Sodium | 414 | N | 8 | 3.3 | mg/Kg | 1 | 03/03/15 | LK | SW6010C |
| Nickel | 13.8 | | 0.39 | 0.39 | mg/Kg | 1 | 03/03/15 | LK | SW6010C |
| Lead | 28.0 | | 0.8 | 0.39 | mg/Kg | 1 | 03/03/15 | LK | SW6010C |
| Antimony | < 1.9 | | 1.9 | 1.9 | mg/Kg | 1 | 03/03/15 | LK | SW6010C |
| Selenium | < 1.6 | | 1.6 | 1.3 | mg/Kg | 1 | 03/03/15 | LK | SW6010C |
| Thallium | < 1.6 | | 1.6 | 1.6 | mg/Kg | 1 | 03/03/15 | LK | SW6010C |
| Vanadium | 40.4 | | 0.4 | 0.39 | mg/Kg | 1 | 03/03/15 | LK | SW6010C |
| Zinc | 49.1 | | 0.8 | 0.39 | mg/Kg | 1 | 03/03/15 | LK | SW6010C |
| Percent Solid | 88 | | | | % | | 03/02/15 | i | SW846-%Solid |
| Total Cyanide | < 0.57 | | 0.57 | 0.28 | mg/Kg | 1 | 03/02/15 | O/EG | SW9012B |
| Soil Extraction for PCB | Completed | | | | | | 03/02/15 | CC/H | SW3545A |
| Soil Extraction for SVOA | Completed | | | | | | 03/02/15 | CJ/VH | SW3545A |
| Mercury Digestion | Completed | | | | | | 03/03/15 | I/I | SW7471B |

Project ID: 109 MARBLEDALE RD TUCKAHOE NY
Client ID: TB-11 4-6

Phoenix I.D.: BH78386

| Parameter | Result | | RL/ PQL | LOD/ MDL | Units | Dilution | Date/Time | By | Reference |
|---|---|---|---|---|---|---|---|---|---|
| Total Metals Digest | Completed | | | | | | 03/02/15 | CB/AG | SW3050B |
| **Polychlorinated Biphenyls** | | | | | | | | | |
| PCB-1016 | ND | | 74 | 74 | ug/Kg | 2 | 03/03/15 | AW | SW8082A |
| PCB-1221 | ND | | 74 | 74 | ug/Kg | 2 | 03/03/15 | AW | SW8082A |
| PCB-1232 | ND | | 74 | 74 | ug/Kg | 2 | 03/03/15 | AW | SW8082A |
| PCB-1242 | ND | | 74 | 74 | ug/Kg | 2 | 03/03/15 | AW | SW8082A |
| PCB-1248 | ND | | 74 | 74 | ug/Kg | 2 | 03/03/15 | AW | SW8082A |
| PCB-1254 | ND | | 74 | 74 | ug/Kg | 2 | 03/03/15 | AW | SW8082A |
| PCB-1260 | ND | | 74 | 74 | ug/Kg | 2 | 03/03/15 | AW | SW8082A |
| PCB-1262 | ND | | 74 | 74 | ug/Kg | 2 | 03/03/15 | AW | SW8082A |
| PCB-1268 | ND | | 74 | 74 | ug/Kg | 2 | 03/03/15 | AW | SW8082A |
| **QA/QC Surrogates** | | | | | | | | | |
| % DCBP | 86 | | | | % | 2 | 03/03/15 | AW | 30 - 150 % |
| % TCMX | 84 | | | | % | 2 | 03/03/15 | AW | 30 - 150 % |
| **1,4-dioxane** | | | | | | | | | |
| 1,4-dioxane | ND | | 100 | 100 | ug/kg | 1 | 03/03/15 | JLI | SW8260C |
| **Volatiles** | | | | | | | | | |
| 1,1,1-Trichloroethane | ND | | 5.8 | 0.58 | ug/Kg | 1 | 03/03/15 | JLI | SW8260C |
| 1,1,2,2-Tetrachloroethane | ND | | 5.8 | 1.2 | ug/Kg | 1 | 03/03/15 | JLI | SW8260C |
| 1,1,2-Trichloroethane | ND | | 5.8 | 1.2 | ug/Kg | 1 | 03/03/15 | JLI | SW8260C |
| 1,1-Dichloroethane | ND | | 5.8 | 1.2 | ug/Kg | 1 | 03/03/15 | JLI | SW8260C |
| 1,1-Dichloroethene | ND | | 5.8 | 0.58 | ug/Kg | 1 | 03/03/15 | JLI | SW8260C |
| 1,2,3-Trichlorobenzene | ND | | 5.8 | 1.2 | ug/Kg | 1 | 03/03/15 | JLI | SW8260C |
| 1,2,4-Trichlorobenzene | ND | | 5.8 | 1.2 | ug/Kg | 1 | 03/03/15 | JLI | SW8260C |
| 1,2-Dibromo-3-chloropropane | ND | | 5.8 | 1.2 | ug/Kg | 1 | 03/03/15 | JLI | SW8260C |
| 1,2-Dibromoethane | ND | | 5.8 | 0.58 | ug/Kg | 1 | 03/03/15 | JLI | SW8260C |
| 1,2-Dichlorobenzene | ND | | 5.8 | 0.58 | ug/Kg | 1 | 03/03/15 | JLI | SW8260C |
| 1,2-Dichloroethane | ND | | 5.8 | 0.58 | ug/Kg | 1 | 03/03/15 | JLI | SW8260C |
| 1,2-Dichloropropane | ND | | 5.8 | 1.2 | ug/Kg | 1 | 03/03/15 | JLI | SW8260C |
| 1,3-Dichlorobenzene | ND | | 5.8 | 0.58 | ug/Kg | 1 | 03/03/15 | JLI | SW8260C |
| 1,4-Dichlorobenzene | ND | | 5.8 | 0.58 | ug/Kg | 1 | 03/03/15 | JLI | SW8260C |
| 2-Hexanone | ND | | 29 | 5.8 | ug/Kg | 1 | 03/03/15 | JLI | SW8260C |
| 4-Methyl-2-pentanone | ND | | 29 | 5.8 | ug/Kg | 1 | 03/03/15 | JLI | SW8260C |
| Acetone | 16 | JS | 50 | 5.8 | ug/Kg | 1 | 03/03/15 | JLI | SW8260C |
| Benzene | 3.0 | J | 5.8 | 0.58 | ug/Kg | 1 | 03/03/15 | JLI | SW8260C |
| Bromochloromethane | ND | | 5.8 | 0.58 | ug/Kg | 1 | 03/03/15 | JLI | SW8260C |
| Bromodichloromethane | ND | | 5.8 | 1.2 | ug/Kg | 1 | 03/03/15 | JLI | SW8260C |
| Bromoform | ND | | 5.8 | 1.2 | ug/Kg | 1 | 03/03/15 | JLI | SW8260C |
| Bromomethane | ND | | 5.8 | 2.3 | ug/Kg | 1 | 03/03/15 | JLI | SW8260C |
| Carbon Disulfide | ND | | 5.8 | 1.2 | ug/Kg | 1 | 03/03/15 | JLI | SW8260C |
| Carbon tetrachloride | ND | | 5.8 | 1.2 | ug/Kg | 1 | 03/03/15 | JLI | SW8260C |
| Chlorobenzene | ND | | 5.8 | 5.8 | ug/Kg | 1 | 03/03/15 | JLI | SW8260C |
| Chloroethane | ND | | 5.8 | 0.58 | ug/Kg | 1 | 03/03/15 | JLI | SW8260C |
| Chloroform | ND | | 5.8 | 0.58 | ug/Kg | 1 | 03/03/15 | JLI | SW8260C |
| Chloromethane | ND | | 5.8 | 1.2 | ug/Kg | 1 | 03/03/15 | JLI | SW8260C |
| cis-1,2-Dichloroethene | ND | | 5.8 | 0.58 | ug/Kg | 1 | 03/03/15 | JLI | SW8260C |
| cis-1,3-Dichloropropene | ND | | 5.8 | 0.58 | ug/Kg | 1 | 03/03/15 | JLI | SW8260C |

Project ID: 109 MARBLEDALE RD TUCKAHOE NY
Client ID: TB-11 4-6

Phoenix I.D.: BH78386

| Parameter | Result | | RL/ PQL | LOD/ MDL | Units | Dilution | Date/Time | By | Reference |
|---|---|---|---|---|---|---|---|---|---|
| Cyclohexane | ND | | 5.8 | 1.2 | ug/Kg | 1 | 03/03/15 | JLI | SW8260C |
| Dibromochloromethane | ND | | 5.8 | 1.2 | ug/Kg | 1 | 03/03/15 | JLI | SW8260C |
| Dichlorodifluoromethane | ND | | 5.8 | 0.58 | ug/Kg | 1 | 03/03/15 | JLI | SW8260C |
| Ethylbenzene | 0.81 | J | 5.8 | 0.58 | ug/Kg | 1 | 03/03/15 | JLI | SW8260C |
| Isopropylbenzene | ND | | 5.8 | 0.58 | ug/Kg | 1 | 03/03/15 | JLI | SW8260C |
| m&p-Xylene | ND | | 5.8 | 1.2 | ug/Kg | 1 | 03/03/15 | JLI | SW8260C |
| Methyl ethyl ketone | ND | | 35 | 5.8 | ug/Kg | 1 | 03/03/15 | JLI | SW8260C |
| Methyl t-butyl ether (MTBE) | ND | | 12 | 1.2 | ug/Kg | 1 | 03/03/15 | JLI | SW8260C |
| Methylacetate | ND | | 5.8 | 2.9 | ug/Kg | 1 | 03/03/15 | JLI | SW8260C |
| Methylcyclohexane | 2.0 | J | 5.8 | 1.2 | ug/Kg | 1 | 03/03/15 | JLI | SW8260C |
| Methylene chloride | ND | | 5.8 | 5.8 | ug/Kg | 1 | 03/03/15 | JLI | SW8260C |
| o-Xylene | ND | | 5.8 | 1.2 | ug/Kg | 1 | 03/03/15 | JLI | SW8260C |
| Styrene | ND | | 5.8 | 0.58 | ug/Kg | 1 | 03/03/15 | JLI | SW8260C |
| Tetrachloroethene | ND | | 5.8 | 1.2 | ug/Kg | 1 | 03/03/15 | JLI | SW8260C |
| Toluene | 0.72 | J | 5.8 | 0.58 | ug/Kg | 1 | 03/03/15 | JLI | SW8260C |
| Total Xylenes | ND | | 5.8 | 1.2 | ug/Kg | 1 | 03/03/15 | JLI | SW8260C |
| trans-1,2-Dichloroethene | ND | | 5.8 | 0.58 | ug/Kg | 1 | 03/03/15 | JLI | SW8260C |
| trans-1,3-Dichloropropene | ND | | 5.8 | 0.58 | ug/Kg | 1 | 03/03/15 | JLI | SW8260C |
| Trichloroethene | ND | | 5.8 | 0.58 | ug/Kg | 1 | 03/03/15 | JLI | SW8260C |
| Trichlorofluoromethane | ND | | 5.8 | 1.2 | ug/Kg | 1 | 03/03/15 | JLI | SW8260C |
| Trichlorotrifluoroethane | ND | | 5.8 | 0.58 | ug/Kg | 1 | 03/03/15 | JLI | SW8260C |
| Vinyl chloride | ND | | 5.8 | 0.58 | ug/Kg | 1 | 03/03/15 | JLI | SW8260C |
| **QA/QC Surrogates** | | | | | | | | | |
| % 1,2-dichlorobenzene-d4 | 99 | | | | % | 1 | 03/03/15 | JLI | 70 - 130 % |
| % Bromofluorobenzene | 99 | | | | % | 1 | 03/03/15 | JLI | 70 - 130 % |
| % Dibromofluoromethane | 94 | | | | % | 1 | 03/03/15 | JLI | 70 - 130 % |
| % Toluene-d8 | 96 | | | | % | 1 | 03/03/15 | JLI | 70 - 130 % |

## Semivolatiles

| | | | | | | | | | |
|---|---|---|---|---|---|---|---|---|---|
| 1,1-Biphenyl | ND | | 2600 | 1100 | ug/Kg | 10 | 03/03/15 | DD | SW8270D |
| 1,2,4,5-Tetrachlorobenzene | ND | | 2600 | 1300 | ug/Kg | 10 | 03/03/15 | DD | SW8270D |
| 2,3,4,6-tetrachlorophenol | ND | | 2600 | 1700 | ug/Kg | 10 | 03/03/15 | DD | SW8270D |
| 2,4,5-Trichlorophenol | ND | | 2600 | 2000 | ug/Kg | 10 | 03/03/15 | DD | SW8270D |
| 2,4,6-Trichlorophenol | ND | | 1500 | 1200 | ug/Kg | 10 | 03/03/15 | DD | SW8270D |
| 2,4-Dichlorophenol | ND | | 1500 | 1300 | ug/Kg | 10 | 03/03/15 | DD | SW8270D |
| 2,4-Dimethylphenol | ND | | 2600 | 920 | ug/Kg | 10 | 03/03/15 | DD | SW8270D |
| 2,4-Dinitrophenol | ND | | 2600 | 2600 | ug/Kg | 10 | 03/03/15 | DD | SW8270D |
| 2,4-Dinitrotoluene | ND | | 1500 | 1500 | ug/Kg | 10 | 03/03/15 | DD | SW8270D |
| 2,6-Dinitrotoluene | ND | | 1500 | 1200 | ug/Kg | 10 | 03/03/15 | DD | SW8270D |
| 2-Chloronaphthalene | ND | | 2600 | 1100 | ug/Kg | 10 | 03/03/15 | DD | SW8270D |
| 2-Chlorophenol | ND | | 2600 | 1100 | ug/Kg | 10 | 03/03/15 | DD | SW8270D |
| 2-Methylnaphthalene | ND | | 2600 | 1100 | ug/Kg | 10 | 03/03/15 | DD | SW8270D |
| 2-Methylphenol (o-cresol) | ND | | 2600 | 1800 | ug/Kg | 10 | 03/03/15 | DD | SW8270D |
| 2-Nitroaniline | ND | | 19000 | 3800 | ug/Kg | 10 | 03/03/15 | DD | SW8270D |
| 2-Nitrophenol | ND | | 2600 | 2400 | ug/Kg | 10 | 03/03/15 | DD | SW8270D |
| 3&4-Methylphenol (m&p-cresol) | ND | | 2600 | 1500 | ug/Kg | 10 | 03/03/15 | DD | SW8270D |
| 3,3'-Dichlorobenzidine | ND | | 1500 | 1500 | ug/Kg | 10 | 03/03/15 | DD | SW8270D |
| 3-Nitroaniline | ND | | 19000 | 8100 | ug/Kg | 10 | 03/03/15 | DD | SW8270D |
| 4,6-Dinitro-2-methylphenol | ND | | 2600 | 2600 | ug/Kg | 10 | 03/03/15 | DD | SW8270D |
| 4-Bromophenyl phenyl ether | ND | | 2600 | 1100 | ug/Kg | 10 | 03/03/15 | DD | SW8270D |

Project ID: 109 MARBLEDALE RD TUCKAHOE NY
Client ID: TB-11 4-6

Phoenix I.D.: BH78386

| Parameter | Result | | RL/ PQL | LOD/ MDL | Units | Dilution | Date/Time | By | Reference | |
|---|---|---|---|---|---|---|---|---|---|---|
| 4-Chloro-3-methylphenol | ND | | 2600 | 1300 | ug/Kg | 10 | 03/03/15 | DD | SW8270D | |
| 4-Chloroaniline | ND | | 7500 | 1700 | ug/Kg | 10 | 03/03/15 | DD | SW8270D | |
| 4-Chlorophenyl phenyl ether | ND | | 2600 | 1300 | ug/Kg | 10 | 03/03/15 | DD | SW8270D | |
| 4-Nitroaniline | ND | | 19000 | 1200 | ug/Kg | 10 | 03/03/15 | DD | SW8270D | |
| 4-Nitrophenol | ND | | 19000 | 1700 | ug/Kg | 10 | 03/03/15 | DD | SW8270D | |
| Acenaphthene | ND | | 2600 | 1100 | ug/Kg | 10 | 03/03/15 | DD | SW8270D | |
| Acenaphthylene | ND | | 1500 | 1000 | ug/Kg | 10 | 03/03/15 | DD | SW8270D | |
| Acetophenone | ND | | 2600 | 1200 | ug/Kg | 10 | 03/03/15 | DD | SW8270D | |
| Anthracene | ND | | 2600 | 1200 | ug/Kg | 10 | 03/03/15 | DD | SW8270D | |
| Atrazine | ND | | 1500 | 1500 | ug/Kg | 10 | 03/03/15 | DD | SW8270D | |
| Benz(a)anthracene | 2800 | | 2600 | 1300 | ug/Kg | 10 | 03/03/15 | DD | SW8270D | |
| Benzaldehyde | ND | | 2600 | 1100 | ug/Kg | 10 | 03/03/15 | DD | SW8270D | |
| Benzo(a)pyrene | 3400 | | 1500 | 1200 | ug/Kg | 10 | 03/03/15 | DD | SW8270D | |
| Benzo(b)fluoranthene | 4000 | | 2600 | 1300 | ug/Kg | 10 | 03/03/15 | DD | SW8270D | |
| Benzo(ghi)perylene | 2400 | J | 2600 | 1200 | ug/Kg | 10 | 03/03/15 | DD | SW8270D | |
| Benzo(k)fluoranthene | 1600 | J | 2600 | 1200 | ug/Kg | 10 | 03/03/15 | DD | SW8270D | |
| Benzyl butyl phthalate | ND | | 2600 | 960 | ug/Kg | 10 | 03/03/15 | DD | SW8270D | |
| Bis(2-chloroethoxy)methane | ND | | 2600 | 1000 | ug/Kg | 10 | 03/03/15 | DD | SW8270D | |
| Bis(2-chloroethyl)ether | ND | | 1500 | 1000 | ug/Kg | 10 | 03/03/15 | DD | SW8270D | |
| Bis(2-chloroisopropyl)ether | ND | | 2600 | 1000 | ug/Kg | 10 | 03/03/15 | DD | SW8270D | 1 |
| Bis(2-ethylhexyl)phthalate | ND | | 2600 | 1100 | ug/Kg | 10 | 03/03/15 | DD | SW8270D | |
| Caprolactam | ND | | 2600 | 2600 | ug/Kg | 10 | 03/03/15 | DD | SW8270D | |
| Carbazole | ND | | 19000 | 2800 | ug/Kg | 10 | 03/03/15 | DD | SW8270D | |
| Chrysene | 2900 | | 2600 | 1300 | ug/Kg | 10 | 03/03/15 | DD | SW8270D | |
| Dibenz(a,h)anthracene | ND | | 1500 | 1200 | ug/Kg | 10 | 03/03/15 | DD | SW8270D | |
| Dibenzofuran | ND | | 2600 | 1100 | ug/Kg | 10 | 03/03/15 | DD | SW8270D | |
| Diethyl phthalate | ND | | 2600 | 1200 | ug/Kg | 10 | 03/03/15 | DD | SW8270D | |
| Dimethylphthalate | ND | | 2600 | 1200 | ug/Kg | 10 | 03/03/15 | DD | SW8270D | |
| Di-n-butylphthalate | ND | | 2600 | 990 | ug/Kg | 10 | 03/03/15 | DD | SW8270D | |
| Di-n-octylphthalate | ND | | 2600 | 960 | ug/Kg | 10 | 03/03/15 | DD | SW8270D | |
| Fluoranthene | 6700 | | 2600 | 1200 | ug/Kg | 10 | 03/03/15 | DD | SW8270D | |
| Fluorene | ND | | 2600 | 1200 | ug/Kg | 10 | 03/03/15 | DD | SW8270D | |
| Hexachlorobenzene | ND | | 1500 | 1100 | ug/Kg | 10 | 03/03/15 | DD | SW8270D | |
| Hexachlorobutadiene | ND | | 2600 | 1300 | ug/Kg | 10 | 03/03/15 | DD | SW8270D | |
| Hexachlorocyclopentadiene | ND | | 2600 | 1100 | ug/Kg | 10 | 03/03/15 | DD | SW8270D | |
| Hexachloroethane | ND | | 1500 | 1100 | ug/Kg | 10 | 03/03/15 | DD | SW8270D | |
| Indeno(1,2,3-cd)pyrene | 2100 | J | 2600 | 1200 | ug/Kg | 10 | 03/03/15 | DD | SW8270D | |
| Isophorone | ND | | 1500 | 1000 | ug/Kg | 10 | 03/03/15 | DD | SW8270D | |
| Naphthalene | ND | | 2600 | 1100 | ug/Kg | 10 | 03/03/15 | DD | SW8270D | |
| Nitrobenzene | ND | | 1500 | 1300 | ug/Kg | 10 | 03/03/15 | DD | SW8270D | |
| N-Nitrosodimethylamine | ND | | 2600 | 1100 | ug/Kg | 10 | 03/03/15 | DD | SW8270D | |
| N-Nitrosodi-n-propylamine | ND | | 1500 | 1200 | ug/Kg | 10 | 03/03/15 | DD | SW8270D | |
| N-Nitrosodiphenylamine | ND | | 1500 | 1400 | ug/Kg | 10 | 03/03/15 | DD | SW8270D | |
| Pentachlorophenol | ND | | 2600 | 1400 | ug/Kg | 10 | 03/03/15 | DD | SW8270D | |
| Phenanthrene | 3600 | | 1500 | 1100 | ug/Kg | 10 | 03/03/15 | DD | SW8270D | |
| Phenol | ND | | 2600 | 1200 | ug/Kg | 10 | 03/03/15 | DD | SW8270D | |
| Pyrene | 5400 | | 2600 | 1300 | ug/Kg | 10 | 03/03/15 | DD | SW8270D | |
| **QA/QC Surrogates** | | | | | | | | | | |
| % 2,4,6-Tribromophenol | 61 | | | | % | 10 | 03/03/15 | DD | 19 - 122 % | |

Project ID: 109 MARBLEDALE RD TUCKAHOE NY
Client ID: TB-11 4-6

Phoenix I.D.: BH78386

| Parameter | Result | RL/ PQL | LOD/ MDL | Units | Dilution | Date/Time | By | Reference |
|---|---|---|---|---|---|---|---|---|
| % 2-Fluorobiphenyl | 74 | | | % | 10 | 03/03/15 | DD | 30 - 115 % |
| % 2-Fluorophenol | 63 | | | % | 10 | 03/03/15 | DD | 25 - 121 % |
| % Nitrobenzene-d5 | 68 | | | % | 10 | 03/03/15 | DD | 23 - 120 % |
| % Phenol-d5 | 67 | | | % | 10 | 03/03/15 | DD | 24 - 113 % |
| % Terphenyl-d14 | 87 | | | % | 10 | 03/03/15 | DD | 18 - 137 % |

1 = This parameter is not certified by NY NELAC for this matrix. NY NELAC does not offer certification for all parameters at this time.

**RL/PQL=Reporting/Practical Quantitation Level (Equivalent to NELAC LOQ, Limit of Quanitation) ND=Not Detected**
**BRL=Below Reporting Level J=Estimated Below RL LOD=Limit of Detection MDL=Method Detection Limit**

## Comments:

Please be advised that the NY 375 soil criteria for chromium are based on hexavalent chromium and trivalent chromium.

All soils, solids and sludges are reported on a dry weight basis unless otherwise noted in the sample comments.

If there are any questions regarding this data, please call Phoenix Client Services at extension 200.
This report must not be reproduced except in full as defined by the attached chain of custody.

**Phyllis Shiller, Laboratory Director**
**May 01, 2015**
**Reviewed and Released by: Tina Covensky**

PHOENIX

Environmental Laboratories, Inc.
587 East Middle Turnpike, P.O.Box 370, Manchester, CT 06045
Tel. (860) 645-1102 Fax (860) 645-0823

ACCREDITED IN ACCORDANCE WITH nelac NY # 11301

# Analysis Report

May 01, 2015

FOR: Attn: Mr. Tim Carr
HydroEnvironmental Solutions, Inc.
One Deans Bridge Rd
Somers NY 10589

| Sample Information | | Custody Information | | Date | Time |
|---|---|---|---|---|---|
| Matrix: | SOLID | Collected by: | RG | 02/27/15 | |
| Location Code: | HESNY-TUCK | Received by: | SW | 03/02/15 | 15:48 |
| Rush Request: | 72 Hour | Analyzed by: | see "By" below | | |
| P.O.#: | | | | | |

## Laboratory Data

SDG ID: GBH78384
Phoenix ID: BH78387

Project ID: 109 MARBLEDALE RD TUCKAHOE NY
Client ID: TB-11 21-23

| Parameter | Result | | RL/ PQL | LOD/ MDL | Units | Dilution | Date/Time | By | Reference |
|---|---|---|---|---|---|---|---|---|---|
| Silver | < 0.36 | | 0.36 | 0.36 | mg/Kg | 1 | 03/03/15 | LK | SW6010C |
| Aluminum | 3670 | | 36 | 7.3 | mg/Kg | 10 | 03/03/15 | LK | SW6010C |
| Arsenic | 3.2 | | 0.7 | 0.73 | mg/Kg | 1 | 03/03/15 | LK | SW6010C |
| Barium | 29.3 | | 0.7 | 0.36 | mg/Kg | 1 | 03/03/15 | LK | SW6010C |
| Beryllium | < 0.29 | | 0.29 | 0.15 | mg/Kg | 1 | 03/03/15 | LK | SW6010C |
| Calcium | 86900 | N | 36 | 33 | mg/Kg | 10 | 03/03/15 | LK | SW6010C |
| Cadmium | < 0.36 | | 0.36 | 0.15 | mg/Kg | 1 | 03/03/15 | LK | SW6010C |
| Cobalt | 4.61 | | 0.36 | 0.36 | mg/Kg | 1 | 03/03/15 | LK | SW6010C |
| Chromium | 16.6 | | 0.36 | 0.36 | mg/Kg | 1 | 03/03/15 | LK | SW6010C |
| Copper | 17.7 | | 0.36 | 0.36 | mg/kg | 1 | 03/03/15 | LK | SW6010C |
| Iron | 8550 | | 3.6 | 3.6 | mg/Kg | 1 | 03/03/15 | LK | SW6010C |
| Mercury | < 0.03 | | 0.03 | 0.02 | mg/Kg | 1 | 03/03/15 | MA | SW7471B |
| Potassium | 1230 | N | 73 | 28 | mg/Kg | 10 | 03/03/15 | LK | SW6010C |
| Magnesium | 48600 | | 36 | 36 | mg/Kg | 10 | 03/03/15 | LK | SW6010C |
| Manganese | 165 | | 3.6 | 3.6 | mg/Kg | 10 | 03/03/15 | EK | SW6010C |
| Sodium | 261 | N | 7 | 3.1 | mg/Kg | 1 | 03/03/15 | LK | SW6010C |
| Nickel | 11.4 | | 0.36 | 0.36 | mg/Kg | 1 | 03/03/15 | LK | SW6010C |
| Lead | 37.5 | | 0.7 | 0.36 | mg/Kg | 1 | 03/03/15 | LK | SW6010C |
| Antimony | < 1.8 | | 1.8 | 1.8 | mg/Kg | 1 | 03/03/15 | LK | SW6010C |
| Selenium | < 1.5 | | 1.5 | 1.2 | mg/Kg | 1 | 03/03/15 | LK | SW6010C |
| Thallium | < 1.5 | | 1.5 | 1.5 | mg/Kg | 1 | 03/03/15 | LK | SW6010C |
| Vanadium | 33.8 | | 0.4 | 0.36 | mg/Kg | 1 | 03/03/15 | LK | SW6010C |
| Zinc | 36.9 | | 0.7 | 0.36 | mg/Kg | 1 | 03/03/15 | LK | SW6010C |
| Percent Solid | 85 | | | | % | | 03/02/15 | i | SW846-%Solid |
| Total Cyanide | < 0.59 | | 0.59 | 0.29 | mg/Kg | 1 | 03/04/15 | O/B/E | SW9012B |
| Soil Extraction for PCB | Completed | | | | | | 03/02/15 | CC/H | SW3545A |
| Soil Extraction for SVOA | Completed | | | | | | 03/02/15 | CJ/VH | SW3545A |
| Mercury Digestion | Completed | | | | | | 03/03/15 | I/I | SW7471B |

Project ID: 109 MARBLEDALE RD TUCKAHOE NY
Client ID: TB-11 21-23

Phoenix I.D.: BH78387

| Parameter | Result | | RL/ PQL | LOD/ MDL | Units | Dilution | Date/Time | By | Reference |
|---|---|---|---|---|---|---|---|---|---|
| Total Metals Digest | Completed | | | | | | 03/02/15 | CB/AG | SW3050B |
| **Polychlorinated Biphenyls** | | | | | | | | | |
| PCB-1016 | ND | | 77 | 77 | ug/Kg | 2 | 03/03/15 | AW | SW8082A |
| PCB-1221 | ND | | 77 | 77 | ug/Kg | 2 | 03/03/15 | AW | SW8082A |
| PCB-1232 | ND | | 77 | 77 | ug/Kg | 2 | 03/03/15 | AW | SW8082A |
| PCB-1242 | ND | | 77 | 77 | ug/Kg | 2 | 03/03/15 | AW | SW8082A |
| PCB-1248 | ND | | 77 | 77 | ug/Kg | 2 | 03/03/15 | AW | SW8082A |
| PCB-1254 | ND | | 77 | 77 | ug/Kg | 2 | 03/03/15 | AW | SW8082A |
| PCB-1260 | ND | | 77 | 77 | ug/Kg | 2 | 03/03/15 | AW | SW8082A |
| PCB-1262 | ND | | 77 | 77 | ug/Kg | 2 | 03/03/15 | AW | SW8082A |
| PCB-1268 | ND | | 77 | 77 | ug/Kg | 2 | 03/03/15 | AW | SW8082A |
| **QA/QC Surrogates** | | | | | | | | | |
| % DCBP | 86 | | | | % | 2 | 03/03/15 | AW | 30 - 150 % |
| % TCMX | 84 | | | | % | 2 | 03/03/15 | AW | 30 - 150 % |
| **1,4-dioxane** | | | | | | | | | |
| 1,4-dioxane | ND | | 100 | 100 | ug/kg | 1 | 03/03/15 | JLI | SW8260C |
| **Volatiles** | | | | | | | | | |
| 1,1,1-Trichloroethane | ND | | 6.1 | 0.61 | ug/Kg | 1 | 03/03/15 | JLI | SW8260C |
| 1,1,2,2-Tetrachloroethane | ND | | 6.1 | 1.2 | ug/Kg | 1 | 03/03/15 | JLI | SW8260C |
| 1,1,2-Trichloroethane | ND | | 6.1 | 1.2 | ug/Kg | 1 | 03/03/15 | JLI | SW8260C |
| 1,1-Dichloroethane | ND | | 6.1 | 1.2 | ug/Kg | 1 | 03/03/15 | JLI | SW8260C |
| 1,1-Dichloroethene | ND | | 6.1 | 0.61 | ug/Kg | 1 | 03/03/15 | JLI | SW8260C |
| 1,2,3-Trichlorobenzene | ND | | 6.1 | 1.2 | ug/Kg | 1 | 03/03/15 | JLI | SW8260C |
| 1,2,4-Trichlorobenzene | ND | | 6.1 | 1.2 | ug/Kg | 1 | 03/03/15 | JLI | SW8260C |
| 1,2-Dibromo-3-chloropropane | ND | | 6.1 | 1.2 | ug/Kg | 1 | 03/03/15 | JLI | SW8260C |
| 1,2-Dibromoethane | ND | | 6.1 | 0.61 | ug/Kg | 1 | 03/03/15 | JLI | SW8260C |
| 1,2-Dichlorobenzene | ND | | 6.1 | 0.61 | ug/Kg | 1 | 03/03/15 | JLI | SW8260C |
| 1,2-Dichloroethane | ND | | 6.1 | 0.61 | ug/Kg | 1 | 03/03/15 | JLI | SW8260C |
| 1,2-Dichloropropane | ND | | 6.1 | 1.2 | ug/Kg | 1 | 03/03/15 | JLI | SW8260C |
| 1,3-Dichlorobenzene | ND | | 6.1 | 0.61 | ug/Kg | 1 | 03/03/15 | JLI | SW8260C |
| 1,4-Dichlorobenzene | ND | | 6.1 | 0.61 | ug/Kg | 1 | 03/03/15 | JLI | SW8260C |
| 2-Hexanone | ND | | 30 | 6.1 | ug/Kg | 1 | 03/03/15 | JLI | SW8260C |
| 4-Methyl-2-pentanone | ND | | 30 | 6.1 | ug/Kg | 1 | 03/03/15 | JLI | SW8260C |
| Acetone | 41 | JS | 50 | 6.1 | ug/Kg | 1 | 03/03/15 | JLI | SW8260C |
| Benzene | 0.78 | J | 6.1 | 0.61 | ug/Kg | 1 | 03/03/15 | JLI | SW8260C |
| Bromochloromethane | ND | | 6.1 | 0.61 | ug/Kg | 1 | 03/03/15 | JLI | SW8260C |
| Bromodichloromethane | ND | | 6.1 | 1.2 | ug/Kg | 1 | 03/03/15 | JLI | SW8260C |
| Bromoform | ND | | 6.1 | 1.2 | ug/Kg | 1 | 03/03/15 | JLI | SW8260C |
| Bromomethane | ND | | 6.1 | 2.4 | ug/Kg | 1 | 03/03/15 | JLI | SW8260C |
| Carbon Disulfide | 3.3 | J | 6.1 | 1.2 | ug/Kg | 1 | 03/03/15 | JLI | SW8260C |
| Carbon tetrachloride | ND | | 6.1 | 1.2 | ug/Kg | 1 | 03/03/15 | JLI | SW8260C |
| Chlorobenzene | ND | | 6.1 | 6.1 | ug/Kg | 1 | 03/03/15 | JLI | SW8260C |
| Chloroethane | ND | | 6.1 | 0.61 | ug/Kg | 1 | 03/03/15 | JLI | SW8260C |
| Chloroform | ND | | 6.1 | 0.61 | ug/Kg | 1 | 03/03/15 | JLI | SW8260C |
| Chloromethane | ND | | 6.1 | 1.2 | ug/Kg | 1 | 03/03/15 | JLI | SW8260C |
| cis-1,2-Dichloroethene | ND | | 6.1 | 0.61 | ug/Kg | 1 | 03/03/15 | JLI | SW8260C |
| cis-1,3-Dichloropropene | ND | | 6.1 | 0.61 | ug/Kg | 1 | 03/03/15 | JLI | SW8260C |

| Parameter | Result | | RL/ PQL | LOD/ MDL | Units | Dilution | Date/Time | By | Reference |
|---|---|---|---|---|---|---|---|---|---|
| Cyclohexane | 1.6 | J | 6.1 | 1.2 | ug/Kg | 1 | 03/03/15 | JLI | SW8260C |
| Dibromochloromethane | ND | | 6.1 | 1.2 | ug/Kg | 1 | 03/03/15 | JLI | SW8260C |
| Dichlorodifluoromethane | 2.7 | J | 6.1 | 0.61 | ug/Kg | 1 | 03/03/15 | JLI | SW8260C |
| Ethylbenzene | ND | | 6.1 | 0.61 | ug/Kg | 1 | 03/03/15 | JLI | SW8260C |
| Isopropylbenzene | ND | | 6.1 | 0.61 | ug/Kg | 1 | 03/03/15 | JLI | SW8260C |
| m&p-Xylene | ND | | 6.1 | 1.2 | ug/Kg | 1 | 03/03/15 | JLI | SW8260C |
| Methyl ethyl ketone | ND | | 36 | 6.1 | ug/Kg | 1 | 03/03/15 | JLI | SW8260C |
| Methyl t-butyl ether (MTBE) | ND | | 12 | 1.2 | ug/Kg | 1 | 03/03/15 | JLI | SW8260C |
| Methylacetate | ND | | 6.1 | 3.0 | ug/Kg | 1 | 03/03/15 | JLI | SW8260C |
| Methylcyclohexane | 4.0 | J | 6.1 | 1.2 | ug/Kg | 1 | 03/03/15 | JLI | SW8260C |
| Methylene chloride | ND | | 6.1 | 6.1 | ug/Kg | 1 | 03/03/15 | JLI | SW8260C |
| o-Xylene | ND | | 6.1 | 1.2 | ug/Kg | 1 | 03/03/15 | JLI | SW8260C |
| Styrene | ND | | 6.1 | 0.61 | ug/Kg | 1 | 03/03/15 | JLI | SW8260C |
| Tetrachloroethene | ND | | 6.1 | 1.2 | ug/Kg | 1 | 03/03/15 | JLI | SW8260C |
| Toluene | ND | | 6.1 | 0.61 | ug/Kg | 1 | 03/03/15 | JLI | SW8260C |
| Total Xylenes | ND | | 6.1 | 1.2 | ug/Kg | 1 | 03/03/15 | JLI | SW8260C |
| trans-1,2-Dichloroethene | ND | | 6.1 | 0.61 | ug/Kg | 1 | 03/03/15 | JLI | SW8260C |
| trans-1,3-Dichloropropene | ND | | 6.1 | 0.61 | ug/Kg | 1 | 03/03/15 | JLI | SW8260C |
| Trichloroethene | ND | | 6.1 | 0.61 | ug/Kg | 1 | 03/03/15 | JLI | SW8260C |
| Trichlorofluoromethane | 2.7 | J | 6.1 | 1.2 | ug/Kg | 1 | 03/03/15 | JLI | SW8260C |
| Trichlorotrifluoroethane | ND | | 6.1 | 0.61 | ug/Kg | 1 | 03/03/15 | JLI | SW8260C |
| Vinyl chloride | ND | | 6.1 | 0.61 | ug/Kg | 1 | 03/03/15 | JLI | SW8260C |
| **QA/QC Surrogates** | | | | | | | | | |
| % 1,2-dichlorobenzene-d4 | 100 | | | | % | 1 | 03/03/15 | JLI | 70 - 130 % |
| % Bromofluorobenzene | 97 | | | | % | 1 | 03/03/15 | JLI | 70 - 130 % |
| % Dibromofluoromethane | 74 | | | | % | 1 | 03/03/15 | JLI | 70 - 130 % |
| % Toluene-d8 | 97 | | | | % | 1 | 03/03/15 | JLI | 70 - 130 % |

## Semivolatiles

| | | | | | | | | | |
|---|---|---|---|---|---|---|---|---|---|
| 1,1-Biphenyl | ND | | 2700 | 1200 | ug/Kg | 10 | 03/03/15 | DD | SW8270D |
| 1,2,4,5-Tetrachlorobenzene | ND | | 2700 | 1400 | ug/Kg | 10 | 03/03/15 | DD | SW8270D |
| 2,3,4,6-tetrachlorophenol | ND | | 2700 | 1800 | ug/Kg | 10 | 03/03/15 | DD | SW8270D |
| 2,4,5-Trichlorophenol | ND | | 2700 | 2100 | ug/Kg | 10 | 03/03/15 | DD | SW8270D |
| 2,4,6-Trichlorophenol | ND | | 1600 | 1200 | ug/Kg | 10 | 03/03/15 | DD | SW8270D |
| 2,4-Dichlorophenol | ND | | 1600 | 1400 | ug/Kg | 10 | 03/03/15 | DD | SW8270D |
| 2,4-Dimethylphenol | ND | | 2700 | 960 | ug/Kg | 10 | 03/03/15 | DD | SW8270D |
| 2,4-Dinitrophenol | ND | | 2700 | 2700 | ug/Kg | 10 | 03/03/15 | DD | SW8270D |
| 2,4-Dinitrotoluene | ND | | 1600 | 1500 | ug/Kg | 10 | 03/03/15 | DD | SW8270D |
| 2,6-Dinitrotoluene | ND | | 1600 | 1200 | ug/Kg | 10 | 03/03/15 | DD | SW8270D |
| 2-Chloronaphthalene | ND | | 2700 | 1100 | ug/Kg | 10 | 03/03/15 | DD | SW8270D |
| 2-Chlorophenol | ND | | 2700 | 1100 | ug/Kg | 10 | 03/03/15 | DD | SW8270D |
| 2-Methylnaphthalene | ND | | 2700 | 1200 | ug/Kg | 10 | 03/03/15 | DD | SW8270D |
| 2-Methylphenol (o-cresol) | ND | | 2700 | 1800 | ug/Kg | 10 | 03/03/15 | DD | SW8270D |
| 2-Nitroaniline | ND | | 19000 | 3900 | ug/Kg | 10 | 03/03/15 | DD | SW8270D |
| 2-Nitrophenol | ND | | 2700 | 2500 | ug/Kg | 10 | 03/03/15 | DD | SW8270D |
| 3&4-Methylphenol (m&p-cresol) | ND | | 2700 | 1500 | ug/Kg | 10 | 03/03/15 | DD | SW8270D |
| 3,3'-Dichlorobenzidine | ND | | 1600 | 1600 | ug/Kg | 10 | 03/03/15 | DD | SW8270D |
| 3-Nitroaniline | ND | | 19000 | 8500 | ug/Kg | 10 | 03/03/15 | DD | SW8270D |
| 4,6-Dinitro-2-methylphenol | ND | | 2700 | 2700 | ug/Kg | 10 | 03/03/15 | DD | SW8270D |
| 4-Bromophenyl phenyl ether | ND | | 2700 | 1100 | ug/Kg | 10 | 03/03/15 | DD | SW8270D |

Project ID: 109 MARBLEDALE RD TUCKAHOE NY
Client ID: TB-11 21-23

Phoenix I.D.: BH78387

| Parameter | Result | | RL/ PQL | LOD/ MDL | Units | Dilution | Date/Time | By | Reference | |
|---|---|---|---|---|---|---|---|---|---|---|
| 4-Chloro-3-methylphenol | ND | | 2700 | 1400 | ug/Kg | 10 | 03/03/15 | DD | SW8270D | |
| 4-Chloroaniline | ND | | 7800 | 1800 | ug/Kg | 10 | 03/03/15 | DD | SW8270D | |
| 4-Chlorophenyl phenyl ether | ND | | 2700 | 1300 | ug/Kg | 10 | 03/03/15 | DD | SW8270D | |
| 4-Nitroaniline | ND | | 19000 | 1300 | ug/Kg | 10 | 03/03/15 | DD | SW8270D | |
| 4-Nitrophenol | ND | | 19000 | 1800 | ug/Kg | 10 | 03/03/15 | DD | SW8270D | |
| Acenaphthene | ND | | 2700 | 1200 | ug/Kg | 10 | 03/03/15 | DD | SW8270D | |
| Acenaphthylene | ND | | 1600 | 1100 | ug/Kg | 10 | 03/03/15 | DD | SW8270D | |
| Acetophenone | ND | | 2700 | 1200 | ug/Kg | 10 | 03/03/15 | DD | SW8270D | |
| Anthracene | 2000 | J | 2700 | 1300 | ug/Kg | 10 | 03/03/15 | DD | SW8270D | |
| Atrazine | ND | | 1600 | 1600 | ug/Kg | 10 | 03/03/15 | DD | SW8270D | |
| Benz(a)anthracene | 3700 | | 2700 | 1300 | ug/Kg | 10 | 03/03/15 | DD | SW8270D | |
| Benzaldehyde | ND | | 2700 | 1200 | ug/Kg | 10 | 03/03/15 | DD | SW8270D | |
| Benzo(a)pyrene | 3000 | | 1600 | 1300 | ug/Kg | 10 | 03/03/15 | DD | SW8270D | |
| Benzo(b)fluoranthene | 3900 | | 2700 | 1300 | ug/Kg | 10 | 03/03/15 | DD | SW8270D | |
| Benzo(ghi)perylene | 1400 | J | 2700 | 1300 | ug/Kg | 10 | 03/03/15 | DD | SW8270D | |
| Benzo(k)fluoranthene | ND | | 2700 | 1300 | ug/Kg | 10 | 03/03/15 | DD | SW8270D | |
| Benzyl butyl phthalate | ND | | 2700 | 1000 | ug/Kg | 10 | 03/03/15 | DD | SW8270D | |
| Bis(2-chloroethoxy)methane | ND | | 2700 | 1100 | ug/Kg | 10 | 03/03/15 | DD | SW8270D | |
| Bis(2-chloroethyl)ether | ND | | 1600 | 1100 | ug/Kg | 10 | 03/03/15 | DD | SW8270D | |
| Bis(2-chloroisopropyl)ether | ND | | 2700 | 1100 | ug/Kg | 10 | 03/03/15 | DD | SW8270D | 1 |
| Bis(2-ethylhexyl)phthalate | 1200 | J | 2700 | 1100 | ug/Kg | 10 | 03/03/15 | DD | SW8270D | |
| Caprolactam | ND | | 2700 | 2700 | ug/Kg | 10 | 03/03/15 | DD | SW8270D | |
| Carbazole | ND | | 19000 | 2900 | ug/Kg | 10 | 03/03/15 | DD | SW8270D | |
| Chrysene | 3300 | | 2700 | 1300 | ug/Kg | 10 | 03/03/15 | DD | SW8270D | |
| Dibenz(a,h)anthracene | ND | | 1600 | 1300 | ug/Kg | 10 | 03/03/15 | DD | SW8270D | |
| Dibenzofuran | ND | | 2700 | 1100 | ug/Kg | 10 | 03/03/15 | DD | SW8270D | |
| Diethyl phthalate | ND | | 2700 | 1200 | ug/Kg | 10 | 03/03/15 | DD | SW8270D | |
| Dimethylphthalate | ND | | 2700 | 1200 | ug/Kg | 10 | 03/03/15 | DD | SW8270D | |
| Di-n-butylphthalate | ND | | 2700 | 1000 | ug/Kg | 10 | 03/03/15 | DD | SW8270D | |
| Di-n-octylphthalate | ND | | 2700 | 1000 | ug/Kg | 10 | 03/03/15 | DD | SW8270D | |
| Fluoranthene | 9100 | | 2700 | 1300 | ug/Kg | 10 | 03/03/15 | DD | SW8270D | |
| Fluorene | ND | | 2700 | 1300 | ug/Kg | 10 | 03/03/15 | DD | SW8270D | |
| Hexachlorobenzene | ND | | 1600 | 1100 | ug/Kg | 10 | 03/03/15 | DD | SW8270D | |
| Hexachlorobutadiene | ND | | 2700 | 1400 | ug/Kg | 10 | 03/03/15 | DD | SW8270D | |
| Hexachlorocyclopentadiene | ND | | 2700 | 1200 | ug/Kg | 10 | 03/03/15 | DD | SW8270D | |
| Hexachloroethane | ND | | 1600 | 1200 | ug/Kg | 10 | 03/03/15 | DD | SW8270D | |
| Indeno(1,2,3-cd)pyrene | ND | | 2700 | 1300 | ug/Kg | 10 | 03/03/15 | DD | SW8270D | |
| Isophorone | ND | | 1600 | 1100 | ug/Kg | 10 | 03/03/15 | DD | SW8270D | |
| Naphthalene | ND | | 2700 | 1100 | ug/Kg | 10 | 03/03/15 | DD | SW8270D | |
| Nitrobenzene | ND | | 1600 | 1400 | ug/Kg | 10 | 03/03/15 | DD | SW8270D | |
| N-Nitrosodimethylamine | ND | | 2700 | 1100 | ug/Kg | 10 | 03/03/15 | DD | SW8270D | |
| N-Nitrosodi-n-propylamine | ND | | 1600 | 1300 | ug/Kg | 10 | 03/03/15 | DD | SW8270D | |
| N-Nitrosodiphenylamine | ND | | 1600 | 1500 | ug/Kg | 10 | 03/03/15 | DD | SW8270D | |
| Pentachlorophenol | ND | | 2700 | 1500 | ug/Kg | 10 | 03/03/15 | DD | SW8270D | |
| Phenanthrene | 6500 | | 1600 | 1100 | ug/Kg | 10 | 03/03/15 | DD | SW8270D | |
| Phenol | ND | | 2700 | 1200 | ug/Kg | 10 | 03/03/15 | DD | SW8270D | |
| Pyrene | 7400 | | 2700 | 1300 | ug/Kg | 10 | 03/03/15 | DD | SW8270D | |
| **QA/QC Surrogates** | | | | | | | | | | |
| % 2,4,6-Tribromophenol | 65 | | | | % | 10 | 03/03/15 | DD | 19 - 122 % | |

Project ID: 109 MARBLEDALE RD TUCKAHOE NY
Client ID: TB-11 21-23

Phoenix I.D.: BH78387

| Parameter | Result | RL/ PQL | LOD/ MDL | Units | Dilution | Date/Time | By | Reference |
|---|---|---|---|---|---|---|---|---|
| % 2-Fluorobiphenyl | 78 | | | % | 10 | 03/03/15 | DD | 30 - 115 % |
| % 2-Fluorophenol | 63 | | | % | 10 | 03/03/15 | DD | 25 - 121 % |
| % Nitrobenzene-d5 | 71 | | | % | 10 | 03/03/15 | DD | 23 - 120 % |
| % Phenol-d5 | 72 | | | % | 10 | 03/03/15 | DD | 24 - 113 % |
| % Terphenyl-d14 | 90 | | | % | 10 | 03/03/15 | DD | 18 - 137 % |

1 = This parameter is not certified by NY NELAC for this matrix. NY NELAC does not offer certification for all parameters at this time.

**RL/PQL=Reporting/Practical Quantitation Level (Equivalent to NELAC LOQ, Limit of Quanitation) ND=Not Detected**
**BRL=Below Reporting Level J=Estimated Below RL LOD=Limit of Detection MDL=Method Detection Limit**

## Comments:

Please be advised that the NY 375 soil criteria for chromium are based on hexavalent chromium and trivalent chromium.

All soils, solids and sludges are reported on a dry weight basis unless otherwise noted in the sample comments.

If there are any questions regarding this data, please call Phoenix Client Services at extension 200.
This report must not be reproduced except in full as defined by the attached chain of custody.

**Phyllis Shiller, Laboratory Director**
**May 01, 2015**
**Reviewed and Released by: Tina Covensky**

PHOENIX

Environmental Laboratories, Inc.
587 East Middle Turnpike, P.O.Box 370, Manchester, CT 06045
Tel. (860) 645-1102 Fax (860) 645-0823

ACCREDITED IN ACCORDANCE WITH nelac NY # 11301

# Analysis Report

May 01, 2015

FOR: Attn: Mr. Tim Carr
HydroEnvironmental Solutions, Inc.
One Deans Bridge Rd
Somers NY 10589

| Sample Information | | Custody Information | | Date | Time |
|---|---|---|---|---|---|
| Matrix: | SOLID | Collected by: | RG | 02/27/15 | |
| Location Code: | HESNY-TUCK | Received by: | SW | 03/02/15 | 15:48 |
| Rush Request: | 72 Hour | Analyzed by: | see "By" below | | |
| P.O.#: | | | | | |

## Laboratory Data

SDG ID: GBH78384
Phoenix ID: BH78388

Project ID: 109 MARBLEDALE RD TUCKAHOE NY
Client ID: TB-8 2-4

| Parameter | Result | | RL/ PQL | LOD/ MDL | Units | Dilution | Date/Time | By | Reference |
|---|---|---|---|---|---|---|---|---|---|
| Silver | < 0.39 | | 0.39 | 0.39 | mg/Kg | 1 | 03/03/15 | LK | SW6010C |
| Aluminum | 7340 | | 39 | 7.7 | mg/Kg | 10 | 03/03/15 | LK | SW6010C |
| Arsenic | 4.7 | | 0.8 | 0.77 | mg/Kg | 1 | 03/03/15 | LK | SW6010C |
| Barium | 195 | | 0.8 | 0.39 | mg/Kg | 1 | 03/03/15 | LK | SW6010C |
| Beryllium | < 0.31 | | 0.31 | 0.15 | mg/Kg | 1 | 03/03/15 | LK | SW6010C |
| Calcium | 108000 | N | 39 | 35 | mg/Kg | 10 | 03/03/15 | LK | SW6010C |
| Cadmium | < 0.39 | | 0.39 | 0.15 | mg/Kg | 1 | 03/03/15 | LK | SW6010C |
| Cobalt | 4.69 | | 0.39 | 0.39 | mg/Kg | 1 | 03/03/15 | LK | SW6010C |
| Chromium | 12.9 | | 0.39 | 0.39 | mg/Kg | 1 | 03/03/15 | LK | SW6010C |
| Copper | 37.7 | | 0.39 | 0.39 | mg/kg | 1 | 03/03/15 | LK | SW6010C |
| Iron | 18800 | | 39 | 39 | mg/Kg | 10 | 03/03/15 | LK | SW6010C |
| Mercury | < 0.03 | | 0.03 | 0.02 | mg/Kg | 1 | 03/03/15 | MA | SW7471B |
| Potassium | 1300 | N | 77 | 30 | mg/Kg | 10 | 03/03/15 | LK | SW6010C |
| Magnesium | 66500 | | 390 | 390 | mg/Kg | 100 | 03/04/15 | LK | SW6010C |
| Manganese | 282 | | 3.9 | 3.9 | mg/Kg | 10 | 03/03/15 | EK | SW6010C |
| Sodium | 101 | N | 8 | 3.3 | mg/Kg | 1 | 03/03/15 | LK | SW6010C |
| Nickel | 10.7 | | 0.39 | 0.39 | mg/Kg | 1 | 03/03/15 | LK | SW6010C |
| Lead | 30.3 | | 0.8 | 0.39 | mg/Kg | 1 | 03/03/15 | LK | SW6010C |
| Antimony | 2.0 | | 1.9 | 1.9 | mg/Kg | 1 | 03/03/15 | LK | SW6010C |
| Selenium | < 1.5 | | 1.5 | 1.3 | mg/Kg | 1 | 03/03/15 | LK | SW6010C |
| Thallium | < 1.5 | | 1.5 | 1.5 | mg/Kg | 1 | 03/03/15 | LK | SW6010C |
| Vanadium | 17.6 | | 0.4 | 0.39 | mg/Kg | 1 | 03/03/15 | LK | SW6010C |
| Zinc | 229 | | 7.7 | 3.9 | mg/Kg | 10 | 03/03/15 | LK | SW6010C |
| Percent Solid | 90 | | | | % | | 03/02/15 | i | SW846-%Solid |
| Total Cyanide | 1.66 | | 0.56 | 0.28 | mg/Kg | 1 | 03/04/15 | O/B/E | SW9012B |
| Soil Extraction for PCB | Completed | | | | | | 03/02/15 | CC/H | SW3545A |
| Soil Extraction for SVOA | Completed | | | | | | 03/02/15 | CJ/VH | SW3545A |
| Mercury Digestion | Completed | | | | | | 03/03/15 | I/I | SW7471B |

Project ID: 109 MARBLEDALE RD TUCKAHOE NY
Client ID: TB-8 2-4

Phoenix I.D.: BH78388

| Parameter | Result | | RL/ PQL | LOD/ MDL | Units | Dilution | Date/Time | By | Reference |
|---|---|---|---|---|---|---|---|---|---|
| Total Metals Digest | Completed | | | | | | 03/02/15 | CB/AG | SW3050B |
| **Polychlorinated Biphenyls** | | | | | | | | | |
| PCB-1016 | ND | | 74 | 74 | ug/Kg | 2 | 03/03/15 | AW | SW8082A |
| PCB-1221 | ND | | 74 | 74 | ug/Kg | 2 | 03/03/15 | AW | SW8082A |
| PCB-1232 | ND | | 74 | 74 | ug/Kg | 2 | 03/03/15 | AW | SW8082A |
| PCB-1242 | ND | | 74 | 74 | ug/Kg | 2 | 03/03/15 | AW | SW8082A |
| PCB-1248 | ND | | 74 | 74 | ug/Kg | 2 | 03/03/15 | AW | SW8082A |
| PCB-1254 | ND | | 74 | 74 | ug/Kg | 2 | 03/03/15 | AW | SW8082A |
| PCB-1260 | ND | | 74 | 74 | ug/Kg | 2 | 03/03/15 | AW | SW8082A |
| PCB-1262 | ND | | 74 | 74 | ug/Kg | 2 | 03/03/15 | AW | SW8082A |
| PCB-1268 | ND | | 74 | 74 | ug/Kg | 2 | 03/03/15 | AW | SW8082A |
| **QA/QC Surrogates** | | | | | | | | | |
| % DCBP | 78 | | | | % | 2 | 03/03/15 | AW | 30 - 150 % |
| % TCMX | 82 | | | | % | 2 | 03/03/15 | AW | 30 - 150 % |
| **1,4-dioxane** | | | | | | | | | |
| 1,4-dioxane | ND | | 100 | 100 | ug/kg | 1 | 03/03/15 | JLI | SW8260C |
| **Volatiles** | | | | | | | | | |
| 1,1,1-Trichloroethane | ND | | 5.6 | 0.56 | ug/Kg | 1 | 03/03/15 | JLI | SW8260C |
| 1,1,2,2-Tetrachloroethane | ND | | 5.6 | 1.1 | ug/Kg | 1 | 03/03/15 | JLI | SW8260C |
| 1,1,2-Trichloroethane | ND | | 5.6 | 1.1 | ug/Kg | 1 | 03/03/15 | JLI | SW8260C |
| 1,1-Dichloroethane | ND | | 5.6 | 1.1 | ug/Kg | 1 | 03/03/15 | JLI | SW8260C |
| 1,1-Dichloroethene | ND | | 5.6 | 0.56 | ug/Kg | 1 | 03/03/15 | JLI | SW8260C |
| 1,2,3-Trichlorobenzene | ND | | 5.6 | 1.1 | ug/Kg | 1 | 03/03/15 | JLI | SW8260C |
| 1,2,4-Trichlorobenzene | ND | | 5.6 | 1.1 | ug/Kg | 1 | 03/03/15 | JLI | SW8260C |
| 1,2-Dibromo-3-chloropropane | ND | | 5.6 | 1.1 | ug/Kg | 1 | 03/03/15 | JLI | SW8260C |
| 1,2-Dibromoethane | ND | | 5.6 | 0.56 | ug/Kg | 1 | 03/03/15 | JLI | SW8260C |
| 1,2-Dichlorobenzene | ND | | 5.6 | 0.56 | ug/Kg | 1 | 03/03/15 | JLI | SW8260C |
| 1,2-Dichloroethane | ND | | 5.6 | 0.56 | ug/Kg | 1 | 03/03/15 | JLI | SW8260C |
| 1,2-Dichloropropane | ND | | 5.6 | 1.1 | ug/Kg | 1 | 03/03/15 | JLI | SW8260C |
| 1,3-Dichlorobenzene | ND | | 5.6 | 0.56 | ug/Kg | 1 | 03/03/15 | JLI | SW8260C |
| 1,4-Dichlorobenzene | ND | | 5.6 | 0.56 | ug/Kg | 1 | 03/03/15 | JLI | SW8260C |
| 2-Hexanone | ND | | 28 | 5.6 | ug/Kg | 1 | 03/03/15 | JLI | SW8260C |
| 4-Methyl-2-pentanone | ND | | 28 | 5.6 | ug/Kg | 1 | 03/03/15 | JLI | SW8260C |
| Acetone | 16 | JS | 50 | 5.6 | ug/Kg | 1 | 03/03/15 | JLI | SW8260C |
| Benzene | ND | | 5.6 | 0.56 | ug/Kg | 1 | 03/03/15 | JLI | SW8260C |
| Bromochloromethane | ND | | 5.6 | 0.56 | ug/Kg | 1 | 03/03/15 | JLI | SW8260C |
| Bromodichloromethane | ND | | 5.6 | 1.1 | ug/Kg | 1 | 03/03/15 | JLI | SW8260C |
| Bromoform | ND | | 5.6 | 1.1 | ug/Kg | 1 | 03/03/15 | JLI | SW8260C |
| Bromomethane | ND | | 5.6 | 2.2 | ug/Kg | 1 | 03/03/15 | JLI | SW8260C |
| Carbon Disulfide | ND | | 5.6 | 1.1 | ug/Kg | 1 | 03/03/15 | JLI | SW8260C |
| Carbon tetrachloride | ND | | 5.6 | 1.1 | ug/Kg | 1 | 03/03/15 | JLI | SW8260C |
| Chlorobenzene | ND | | 5.6 | 5.6 | ug/Kg | 1 | 03/03/15 | JLI | SW8260C |
| Chloroethane | ND | | 5.6 | 0.56 | ug/Kg | 1 | 03/03/15 | JLI | SW8260C |
| Chloroform | ND | | 5.6 | 0.56 | ug/Kg | 1 | 03/03/15 | JLI | SW8260C |
| Chloromethane | ND | | 5.6 | 1.1 | ug/Kg | 1 | 03/03/15 | JLI | SW8260C |
| cis-1,2-Dichloroethene | ND | | 5.6 | 0.56 | ug/Kg | 1 | 03/03/15 | JLI | SW8260C |
| cis-1,3-Dichloropropene | ND | | 5.6 | 0.56 | ug/Kg | 1 | 03/03/15 | JLI | SW8260C |

| Parameter | Result | | RL/ PQL | LOD/ MDL | Units | Dilution | Date/Time | By | Reference |
|---|---|---|---|---|---|---|---|---|---|
| Cyclohexane | ND | | 5.6 | 1.1 | ug/Kg | 1 | 03/03/15 | JLI | SW8260C |
| Dibromochloromethane | ND | | 5.6 | 1.1 | ug/Kg | 1 | 03/03/15 | JLI | SW8260C |
| Dichlorodifluoromethane | ND | | 5.6 | 0.56 | ug/Kg | 1 | 03/03/15 | JLI | SW8260C |
| Ethylbenzene | ND | | 5.6 | 0.56 | ug/Kg | 1 | 03/03/15 | JLI | SW8260C |
| Isopropylbenzene | ND | | 5.6 | 0.56 | ug/Kg | 1 | 03/03/15 | JLI | SW8260C |
| m&p-Xylene | ND | | 5.6 | 1.1 | ug/Kg | 1 | 03/03/15 | JLI | SW8260C |
| Methyl ethyl ketone | ND | | 33 | 5.6 | ug/Kg | 1 | 03/03/15 | JLI | SW8260C |
| Methyl t-butyl ether (MTBE) | ND | | 11 | 1.1 | ug/Kg | 1 | 03/03/15 | JLI | SW8260C |
| Methylacetate | ND | | 5.6 | 2.8 | ug/Kg | 1 | 03/03/15 | JLI | SW8260C |
| Methylcyclohexane | ND | | 5.6 | 1.1 | ug/Kg | 1 | 03/03/15 | JLI | SW8260C |
| Methylene chloride | ND | | 5.6 | 5.6 | ug/Kg | 1 | 03/03/15 | JLI | SW8260C |
| o-Xylene | ND | | 5.6 | 1.1 | ug/Kg | 1 | 03/03/15 | JLI | SW8260C |
| Styrene | ND | | 5.6 | 0.56 | ug/Kg | 1 | 03/03/15 | JLI | SW8260C |
| Tetrachloroethene | ND | | 5.6 | 1.1 | ug/Kg | 1 | 03/03/15 | JLI | SW8260C |
| Toluene | ND | | 5.6 | 0.56 | ug/Kg | 1 | 03/03/15 | JLI | SW8260C |
| Total Xylenes | ND | | 5.6 | 1.1 | ug/Kg | 1 | 03/03/15 | JLI | SW8260C |
| trans-1,2-Dichloroethene | ND | | 5.6 | 0.56 | ug/Kg | 1 | 03/03/15 | JLI | SW8260C |
| trans-1,3-Dichloropropene | ND | | 5.6 | 0.56 | ug/Kg | 1 | 03/03/15 | JLI | SW8260C |
| Trichloroethene | 330 | D | 290 | 29 | ug/Kg | 38 | 03/03/15 | JLI | SW8260C |
| Trichlorofluoromethane | ND | | 5.6 | 1.1 | ug/Kg | 1 | 03/03/15 | JLI | SW8260C |
| Trichlorotrifluoroethane | ND | | 5.6 | 0.56 | ug/Kg | 1 | 03/03/15 | JLI | SW8260C |
| Vinyl chloride | ND | | 5.6 | 0.56 | ug/Kg | 1 | 03/03/15 | JLI | SW8260C |
| **QA/QC Surrogates** | | | | | | | | | |
| % 1,2-dichlorobenzene-d4 | 97 | | | | % | 1 | 03/03/15 | JLI | 70 - 130 % |
| % Bromofluorobenzene | 96 | | | | % | 1 | 03/03/15 | JLI | 70 - 130 % |
| % Dibromofluoromethane | 91 | | | | % | 1 | 03/03/15 | JLI | 70 - 130 % |
| % Toluene-d8 | 99 | | | | % | 1 | 03/03/15 | JLI | 70 - 130 % |

## Semivolatiles

| | | | | | | | | | |
|---|---|---|---|---|---|---|---|---|---|
| 1,1-Biphenyl | ND | | 260 | 110 | ug/Kg | 1 | 03/03/15 | DD | SW8270D |
| 1,2,4,5-Tetrachlorobenzene | ND | | 260 | 130 | ug/Kg | 1 | 03/03/15 | DD | SW8270D |
| 2,3,4,6-tetrachlorophenol | ND | | 260 | 170 | ug/Kg | 1 | 03/03/15 | DD | SW8270D |
| 2,4,5-Trichlorophenol | ND | | 260 | 200 | ug/Kg | 1 | 03/03/15 | DD | SW8270D |
| 2,4,6-Trichlorophenol | ND | | 150 | 120 | ug/Kg | 1 | 03/03/15 | DD | SW8270D |
| 2,4-Dichlorophenol | ND | | 150 | 130 | ug/Kg | 1 | 03/03/15 | DD | SW8270D |
| 2,4-Dimethylphenol | ND | | 260 | 92 | ug/Kg | 1 | 03/03/15 | DD | SW8270D |
| 2,4-Dinitrophenol | ND | | 260 | 260 | ug/Kg | 1 | 03/03/15 | DD | SW8270D |
| 2,4-Dinitrotoluene | ND | | 150 | 150 | ug/Kg | 1 | 03/03/15 | DD | SW8270D |
| 2,6-Dinitrotoluene | ND | | 150 | 120 | ug/Kg | 1 | 03/03/15 | DD | SW8270D |
| 2-Chloronaphthalene | ND | | 260 | 110 | ug/Kg | 1 | 03/03/15 | DD | SW8270D |
| 2-Chlorophenol | ND | | 260 | 110 | ug/Kg | 1 | 03/03/15 | DD | SW8270D |
| 2-Methylnaphthalene | ND | | 260 | 110 | ug/Kg | 1 | 03/03/15 | DD | SW8270D |
| 2-Methylphenol (o-cresol) | ND | | 260 | 170 | ug/Kg | 1 | 03/03/15 | DD | SW8270D |
| 2-Nitroaniline | ND | | 1800 | 370 | ug/Kg | 1 | 03/03/15 | DD | SW8270D |
| 2-Nitrophenol | ND | | 260 | 230 | ug/Kg | 1 | 03/03/15 | DD | SW8270D |
| 3&4-Methylphenol (m&p-cresol) | ND | | 260 | 150 | ug/Kg | 1 | 03/03/15 | DD | SW8270D |
| 3,3'-Dichlorobenzidine | ND | | 150 | 150 | ug/Kg | 1 | 03/03/15 | DD | SW8270D |
| 3-Nitroaniline | ND | | 1800 | 800 | ug/Kg | 1 | 03/03/15 | DD | SW8270D |
| 4,6-Dinitro-2-methylphenol | ND | | 260 | 260 | ug/Kg | 1 | 03/03/15 | DD | SW8270D |
| 4-Bromophenyl phenyl ether | ND | | 260 | 110 | ug/Kg | 1 | 03/03/15 | DD | SW8270D |

Project ID: 109 MARBLEDALE RD TUCKAHOE NY
Client ID: TB-8 2-4

Phoenix I.D.: BH78388

| Parameter | Result | | RL/ PQL | LOD/ MDL | Units | Dilution | Date/Time | By | Reference | |
|---|---|---|---|---|---|---|---|---|---|---|
| 4-Chloro-3-methylphenol | ND | | 260 | 130 | ug/Kg | 1 | 03/03/15 | DD | SW8270D | |
| 4-Chloroaniline | ND | | 740 | 170 | ug/Kg | 1 | 03/03/15 | DD | SW8270D | |
| 4-Chlorophenyl phenyl ether | ND | | 260 | 120 | ug/Kg | 1 | 03/03/15 | DD | SW8270D | |
| 4-Nitroaniline | ND | | 1800 | 120 | ug/Kg | 1 | 03/03/15 | DD | SW8270D | |
| 4-Nitrophenol | ND | | 1800 | 170 | ug/Kg | 1 | 03/03/15 | DD | SW8270D | |
| Acenaphthene | ND | | 260 | 110 | ug/Kg | 1 | 03/03/15 | DD | SW8270D | |
| Acenaphthylene | ND | | 150 | 100 | ug/Kg | 1 | 03/03/15 | DD | SW8270D | |
| Acetophenone | ND | | 260 | 120 | ug/Kg | 1 | 03/03/15 | DD | SW8270D | |
| Anthracene | ND | | 260 | 120 | ug/Kg | 1 | 03/03/15 | DD | SW8270D | |
| Atrazine | ND | | 150 | 150 | ug/Kg | 1 | 03/03/15 | DD | SW8270D | |
| Benz(a)anthracene | 270 | | 260 | 120 | ug/Kg | 1 | 03/03/15 | DD | SW8270D | |
| Benzaldehyde | ND | | 260 | 110 | ug/Kg | 1 | 03/03/15 | DD | SW8270D | |
| Benzo(a)pyrene | 260 | | 150 | 120 | ug/Kg | 1 | 03/03/15 | DD | SW8270D | |
| Benzo(b)fluoranthene | 350 | | 260 | 130 | ug/Kg | 1 | 03/03/15 | DD | SW8270D | |
| Benzo(ghi)perylene | 180 | J | 260 | 120 | ug/Kg | 1 | 03/03/15 | DD | SW8270D | |
| Benzo(k)fluoranthene | 150 | J | 260 | 120 | ug/Kg | 1 | 03/03/15 | DD | SW8270D | |
| Benzyl butyl phthalate | ND | | 260 | 95 | ug/Kg | 1 | 03/03/15 | DD | SW8270D | |
| Bis(2-chloroethoxy)methane | ND | | 260 | 100 | ug/Kg | 1 | 03/03/15 | DD | SW8270D | |
| Bis(2-chloroethyl)ether | ND | | 150 | 100 | ug/Kg | 1 | 03/03/15 | DD | SW8270D | |
| Bis(2-chloroisopropyl)ether | ND | | 260 | 100 | ug/Kg | 1 | 03/03/15 | DD | SW8270D | 1 |
| Bis(2-ethylhexyl)phthalate | 900 | | 260 | 110 | ug/Kg | 1 | 03/03/15 | DD | SW8270D | |
| Caprolactam | ND | | 260 | 260 | ug/Kg | 1 | 03/03/15 | DD | SW8270D | |
| Carbazole | ND | | 1800 | 280 | ug/Kg | 1 | 03/03/15 | DD | SW8270D | |
| Chrysene | 300 | | 260 | 120 | ug/Kg | 1 | 03/03/15 | DD | SW8270D | |
| Dibenz(a,h)anthracene | ND | | 150 | 120 | ug/Kg | 1 | 03/03/15 | DD | SW8270D | |
| Dibenzofuran | ND | | 260 | 110 | ug/Kg | 1 | 03/03/15 | DD | SW8270D | |
| Diethyl phthalate | ND | | 260 | 120 | ug/Kg | 1 | 03/03/15 | DD | SW8270D | |
| Dimethylphthalate | ND | | 260 | 110 | ug/Kg | 1 | 03/03/15 | DD | SW8270D | |
| Di-n-butylphthalate | ND | | 260 | 98 | ug/Kg | 1 | 03/03/15 | DD | SW8270D | |
| Di-n-octylphthalate | ND | | 260 | 95 | ug/Kg | 1 | 03/03/15 | DD | SW8270D | |
| Fluoranthene | 670 | | 260 | 120 | ug/Kg | 1 | 03/03/15 | DD | SW8270D | |
| Fluorene | ND | | 260 | 120 | ug/Kg | 1 | 03/03/15 | DD | SW8270D | |
| Hexachlorobenzene | ND | | 150 | 110 | ug/Kg | 1 | 03/03/15 | DD | SW8270D | |
| Hexachlorobutadiene | ND | | 260 | 130 | ug/Kg | 1 | 03/03/15 | DD | SW8270D | |
| Hexachlorocyclopentadiene | ND | | 260 | 110 | ug/Kg | 1 | 03/03/15 | DD | SW8270D | |
| Hexachloroethane | ND | | 150 | 110 | ug/Kg | 1 | 03/03/15 | DD | SW8270D | |
| Indeno(1,2,3-cd)pyrene | 150 | J | 260 | 120 | ug/Kg | 1 | 03/03/15 | DD | SW8270D | |
| Isophorone | ND | | 150 | 100 | ug/Kg | 1 | 03/03/15 | DD | SW8270D | |
| Naphthalene | ND | | 260 | 110 | ug/Kg | 1 | 03/03/15 | DD | SW8270D | |
| Nitrobenzene | ND | | 150 | 130 | ug/Kg | 1 | 03/03/15 | DD | SW8270D | |
| N-Nitrosodimethylamine | ND | | 260 | 100 | ug/Kg | 1 | 03/03/15 | DD | SW8270D | |
| N-Nitrosodi-n-propylamine | ND | | 150 | 120 | ug/Kg | 1 | 03/03/15 | DD | SW8270D | |
| N-Nitrosodiphenylamine | ND | | 150 | 140 | ug/Kg | 1 | 03/03/15 | DD | SW8270D | |
| Pentachlorophenol | ND | | 260 | 140 | ug/Kg | 1 | 03/03/15 | DD | SW8270D | |
| Phenanthrene | 460 | | 150 | 110 | ug/Kg | 1 | 03/03/15 | DD | SW8270D | |
| Phenol | ND | | 260 | 120 | ug/Kg | 1 | 03/03/15 | DD | SW8270D | |
| Pyrene | 540 | | 260 | 130 | ug/Kg | 1 | 03/03/15 | DD | SW8270D | |
| **QA/QC Surrogates** | | | | | | | | | | |
| % 2,4,6-Tribromophenol | 73 | | | | % | 1 | 03/03/15 | DD | 19 - 122 % | |

Project ID: 109 MARBLEDALE RD TUCKAHOE NY
Client ID: TB-8 2-4

Phoenix I.D.: BH78388

| Parameter | Result | RL/ PQL | LOD/ MDL | Units | Dilution | Date/Time | By | Reference |
|---|---|---|---|---|---|---|---|---|
| % 2-Fluorobiphenyl | 75 | | | % | 1 | 03/03/15 | DD | 30 - 115 % |
| % 2-Fluorophenol | 63 | | | % | 1 | 03/03/15 | DD | 25 - 121 % |
| % Nitrobenzene-d5 | 71 | | | % | 1 | 03/03/15 | DD | 23 - 120 % |
| % Phenol-d5 | 69 | | | % | 1 | 03/03/15 | DD | 24 - 113 % |
| % Terphenyl-d14 | 88 | | | % | 1 | 03/03/15 | DD | 18 - 137 % |

1 = This parameter is not certified by NY NELAC for this matrix. NY NELAC does not offer certification for all parameters at this time.

**RL/PQL=Reporting/Practical Quantitation Level (Equivalent to NELAC LOQ, Limit of Quanitation) ND=Not Detected**
**BRL=Below Reporting Level J=Estimated Below RL LOD=Limit of Detection MDL=Method Detection Limit**

## Comments:

Please be advised that the NY 375 soil criteria for chromium are based on hexavalent chromium and trivalent chromium.

All soils, solids and sludges are reported on a dry weight basis unless otherwise noted in the sample comments.

If there are any questions regarding this data, please call Phoenix Client Services at extension 200.
This report must not be reproduced except in full as defined by the attached chain of custody.

**Phyllis Shiller, Laboratory Director**
**May 01, 2015**
**Reviewed and Released by: Tina Covensky**

PHOENIX

Environmental Laboratories, Inc.
587 East Middle Turnpike, P.O.Box 370, Manchester, CT 06045
Tel. (860) 645-1102 Fax (860) 645-0823

ACCREDITED IN ACCORDANCE WITH nelac NY # 11301

# Analysis Report

May 01, 2015

FOR: Attn: Mr. Tim Carr
HydroEnvironmental Solutions, Inc.
One Deans Bridge Rd
Somers NY 10589

| Sample Information | | Custody Information | | Date | Time |
|---|---|---|---|---|---|
| Matrix: | SOLID | Collected by: | RG | 02/27/15 | |
| Location Code: | HESNY-TUCK | Received by: | SW | 03/02/15 | 15:48 |
| Rush Request: | 72 Hour | Analyzed by: | see "By" below | | |
| P.O.#: | | | | | |

## Laboratory Data

SDG ID: GBH78384
Phoenix ID: BH78389

Project ID: 109 MARBLEDALE RD TUCKAHOE NY
Client ID: TB-8 20-22

| Parameter | Result | | RL/ PQL | LOD/ MDL | Units | Dilution | Date/Time | By | Reference |
|---|---|---|---|---|---|---|---|---|---|
| Silver | < 0.34 | | 0.34 | 0.34 | mg/Kg | 1 | 03/03/15 | LK | SW6010C |
| Aluminum | 5740 | | 34 | 6.7 | mg/Kg | 10 | 03/03/15 | LK | SW6010C |
| Arsenic | 0.9 | | 0.7 | 0.67 | mg/Kg | 1 | 03/03/15 | LK | SW6010C |
| Barium | 17.0 | | 0.7 | 0.34 | mg/Kg | 1 | 03/03/15 | LK | SW6010C |
| Beryllium | < 0.27 | | 0.27 | 0.13 | mg/Kg | 1 | 03/03/15 | LK | SW6010C |
| Calcium | 168000 | N | 3400 | 3100 | mg/Kg | 1000 | 03/04/15 | LK | SW6010C |
| Cadmium | < 0.34 | | 0.34 | 0.13 | mg/Kg | 1 | 03/03/15 | LK | SW6010C |
| Cobalt | 2.68 | | 0.34 | 0.34 | mg/Kg | 1 | 03/03/15 | LK | SW6010C |
| Chromium | 7.23 | | 0.34 | 0.34 | mg/Kg | 1 | 03/03/15 | LK | SW6010C |
| Copper | 4.26 | | 0.34 | 0.34 | mg/kg | 1 | 03/03/15 | LK | SW6010C |
| Iron | 5030 | | 3.4 | 3.4 | mg/Kg | 1 | 03/03/15 | LK | SW6010C |
| Mercury | < 0.03 | | 0.03 | 0.02 | mg/Kg | 1 | 03/03/15 | MA | SW7471B |
| Potassium | 353 | N | 7 | 2.6 | mg/Kg | 1 | 03/03/15 | LK | SW6010C |
| Magnesium | 83800 | | 3400 | 3400 | mg/Kg | 1000 | 03/04/15 | LK | SW6010C |
| Manganese | 136 | | 3.4 | 3.4 | mg/Kg | 10 | 03/03/15 | EK | SW6010C |
| Sodium | 32 | N | 7 | 2.9 | mg/Kg | 1 | 03/03/15 | LK | SW6010C |
| Nickel | 5.77 | | 0.34 | 0.34 | mg/Kg | 1 | 03/03/15 | LK | SW6010C |
| Lead | 5.1 | | 0.7 | 0.34 | mg/Kg | 1 | 03/03/15 | LK | SW6010C |
| Antimony | < 1.7 | | 1.7 | 1.7 | mg/Kg | 1 | 03/03/15 | LK | SW6010C |
| Selenium | < 1.3 | | 1.3 | 1.1 | mg/Kg | 1 | 03/03/15 | LK | SW6010C |
| Thallium | < 1.3 | | 1.3 | 1.3 | mg/Kg | 1 | 03/03/15 | LK | SW6010C |
| Vanadium | 8.8 | | 0.3 | 0.34 | mg/Kg | 1 | 03/03/15 | LK | SW6010C |
| Zinc | 158 | | 6.7 | 3.4 | mg/Kg | 10 | 03/03/15 | LK | SW6010C |
| Percent Solid | 91 | | | | % | | 03/02/15 | i | SW846-%Solid |
| Total Cyanide | 2.93 | | 0.50 | 0.25 | mg/Kg | 1 | 03/04/15 | O/B/E | SW9012B |
| Soil Extraction for PCB | Completed | | | | | | 03/02/15 | CC/H | SW3545A |
| Soil Extraction for SVOA | Completed | | | | | | 03/02/15 | CJ/VH | SW3545A |
| Mercury Digestion | Completed | | | | | | 03/03/15 | I/I | SW7471B |

Project ID: 109 MARBLEDALE RD TUCKAHOE NY
Client ID: TB-8 20-22

Phoenix I.D.: BH78389

| Parameter | Result | | RL/ PQL | LOD/ MDL | Units | Dilution | Date/Time | By | Reference |
|---|---|---|---|---|---|---|---|---|---|
| Total Metals Digest | Completed | | | | | | 03/02/15 | CB/AG | SW3050B |
| **Polychlorinated Biphenyls** | | | | | | | | | |
| PCB-1016 | ND | | 71 | 71 | ug/Kg | 2 | 03/03/15 | AW | SW8082A |
| PCB-1221 | ND | | 71 | 71 | ug/Kg | 2 | 03/03/15 | AW | SW8082A |
| PCB-1232 | ND | | 71 | 71 | ug/Kg | 2 | 03/03/15 | AW | SW8082A |
| PCB-1242 | ND | | 71 | 71 | ug/Kg | 2 | 03/03/15 | AW | SW8082A |
| PCB-1248 | ND | | 71 | 71 | ug/Kg | 2 | 03/03/15 | AW | SW8082A |
| PCB-1254 | ND | | 71 | 71 | ug/Kg | 2 | 03/03/15 | AW | SW8082A |
| PCB-1260 | ND | | 71 | 71 | ug/Kg | 2 | 03/03/15 | AW | SW8082A |
| PCB-1262 | ND | | 71 | 71 | ug/Kg | 2 | 03/03/15 | AW | SW8082A |
| PCB-1268 | ND | | 71 | 71 | ug/Kg | 2 | 03/03/15 | AW | SW8082A |
| **QA/QC Surrogates** | | | | | | | | | |
| % DCBP | 53 | | | | % | 2 | 03/03/15 | AW | 30 - 150 % |
| % TCMX | 59 | | | | % | 2 | 03/03/15 | AW | 30 - 150 % |
| **1,4-dioxane** | | | | | | | | | |
| 1,4-dioxane | ND | | 87 | 87 | ug/kg | 1 | 03/03/15 | JLI | SW8260C |
| **Volatiles** | | | | | | | | | |
| 1,1,1-Trichloroethane | ND | | 4.3 | 0.43 | ug/Kg | 1 | 03/03/15 | JLI | SW8260C |
| 1,1,2,2-Tetrachloroethane | ND | | 4.3 | 0.87 | ug/Kg | 1 | 03/03/15 | JLI | SW8260C |
| 1,1,2-Trichloroethane | ND | | 4.3 | 0.87 | ug/Kg | 1 | 03/03/15 | JLI | SW8260C |
| 1,1-Dichloroethane | ND | | 4.3 | 0.87 | ug/Kg | 1 | 03/03/15 | JLI | SW8260C |
| 1,1-Dichloroethene | ND | | 4.3 | 0.43 | ug/Kg | 1 | 03/03/15 | JLI | SW8260C |
| 1,2,3-Trichlorobenzene | ND | | 4.3 | 0.87 | ug/Kg | 1 | 03/03/15 | JLI | SW8260C |
| 1,2,4-Trichlorobenzene | ND | | 4.3 | 0.87 | ug/Kg | 1 | 03/03/15 | JLI | SW8260C |
| 1,2-Dibromo-3-chloropropane | ND | | 4.3 | 0.87 | ug/Kg | 1 | 03/03/15 | JLI | SW8260C |
| 1,2-Dibromoethane | ND | | 4.3 | 0.43 | ug/Kg | 1 | 03/03/15 | JLI | SW8260C |
| 1,2-Dichlorobenzene | ND | | 4.3 | 0.43 | ug/Kg | 1 | 03/03/15 | JLI | SW8260C |
| 1,2-Dichloroethane | ND | | 4.3 | 0.43 | ug/Kg | 1 | 03/03/15 | JLI | SW8260C |
| 1,2-Dichloropropane | ND | | 4.3 | 0.87 | ug/Kg | 1 | 03/03/15 | JLI | SW8260C |
| 1,3-Dichlorobenzene | ND | | 4.3 | 0.43 | ug/Kg | 1 | 03/03/15 | JLI | SW8260C |
| 1,4-Dichlorobenzene | ND | | 4.3 | 0.43 | ug/Kg | 1 | 03/03/15 | JLI | SW8260C |
| 2-Hexanone | ND | | 22 | 4.3 | ug/Kg | 1 | 03/03/15 | JLI | SW8260C |
| 4-Methyl-2-pentanone | ND | | 22 | 4.3 | ug/Kg | 1 | 03/03/15 | JLI | SW8260C |
| Acetone | 6.5 | JS | 43 | 4.3 | ug/Kg | 1 | 03/03/15 | JLI | SW8260C |
| Benzene | ND | | 4.3 | 0.43 | ug/Kg | 1 | 03/03/15 | JLI | SW8260C |
| Bromochloromethane | ND | | 4.3 | 0.43 | ug/Kg | 1 | 03/03/15 | JLI | SW8260C |
| Bromodichloromethane | ND | | 4.3 | 0.87 | ug/Kg | 1 | 03/03/15 | JLI | SW8260C |
| Bromoform | ND | | 4.3 | 0.87 | ug/Kg | 1 | 03/03/15 | JLI | SW8260C |
| Bromomethane | ND | | 4.3 | 1.7 | ug/Kg | 1 | 03/03/15 | JLI | SW8260C |
| Carbon Disulfide | ND | | 4.3 | 0.87 | ug/Kg | 1 | 03/03/15 | JLI | SW8260C |
| Carbon tetrachloride | ND | | 4.3 | 0.87 | ug/Kg | 1 | 03/03/15 | JLI | SW8260C |
| Chlorobenzene | ND | | 280 | 280 | ug/Kg | 36 | 03/03/15 | JLI | SW8260C |
| Chloroethane | ND | | 4.3 | 0.43 | ug/Kg | 1 | 03/03/15 | JLI | SW8260C |
| Chloroform | ND | | 4.3 | 0.43 | ug/Kg | 1 | 03/03/15 | JLI | SW8260C |
| Chloromethane | ND | | 4.3 | 0.87 | ug/Kg | 1 | 03/03/15 | JLI | SW8260C |
| cis-1,2-Dichloroethene | ND | | 4.3 | 0.43 | ug/Kg | 1 | 03/03/15 | JLI | SW8260C |
| cis-1,3-Dichloropropene | ND | | 4.3 | 0.43 | ug/Kg | 1 | 03/03/15 | JLI | SW8260C |

| Parameter | Result | | RL/ PQL | LOD/ MDL | Units | Dilution | Date/Time | By | Reference |
|---|---|---|---|---|---|---|---|---|---|
| Cyclohexane | ND | | 4.3 | 0.87 | ug/Kg | 1 | 03/03/15 | JLI | SW8260C |
| Dibromochloromethane | ND | | 4.3 | 0.87 | ug/Kg | 1 | 03/03/15 | JLI | SW8260C |
| Dichlorodifluoromethane | ND | | 4.3 | 0.43 | ug/Kg | 1 | 03/03/15 | JLI | SW8260C |
| Ethylbenzene | ND | | 4.3 | 0.43 | ug/Kg | 1 | 03/03/15 | JLI | SW8260C |
| Isopropylbenzene | ND | | 4.3 | 0.43 | ug/Kg | 1 | 03/03/15 | JLI | SW8260C |
| m&p-Xylene | ND | | 4.3 | 0.87 | ug/Kg | 1 | 03/03/15 | JLI | SW8260C |
| Methyl ethyl ketone | ND | | 26 | 4.3 | ug/Kg | 1 | 03/03/15 | JLI | SW8260C |
| Methyl t-butyl ether (MTBE) | ND | | 8.7 | 0.87 | ug/Kg | 1 | 03/03/15 | JLI | SW8260C |
| Methylacetate | ND | | 4.3 | 2.2 | ug/Kg | 1 | 03/03/15 | JLI | SW8260C |
| Methylcyclohexane | ND | | 4.3 | 0.87 | ug/Kg | 1 | 03/03/15 | JLI | SW8260C |
| Methylene chloride | ND | | 4.3 | 4.3 | ug/Kg | 1 | 03/03/15 | JLI | SW8260C |
| o-Xylene | ND | | 4.3 | 0.87 | ug/Kg | 1 | 03/03/15 | JLI | SW8260C |
| Styrene | ND | | 4.3 | 0.43 | ug/Kg | 1 | 03/03/15 | JLI | SW8260C |
| Tetrachloroethene | 2.7 | J | 4.3 | 0.87 | ug/Kg | 1 | 03/03/15 | JLI | SW8260C |
| Toluene | ND | | 4.3 | 0.43 | ug/Kg | 1 | 03/03/15 | JLI | SW8260C |
| Total Xylenes | ND | | 4.3 | 0.87 | ug/Kg | 1 | 03/03/15 | JLI | SW8260C |
| trans-1,2-Dichloroethene | ND | | 4.3 | 0.43 | ug/Kg | 1 | 03/03/15 | JLI | SW8260C |
| trans-1,3-Dichloropropene | ND | | 4.3 | 0.43 | ug/Kg | 1 | 03/03/15 | JLI | SW8260C |
| Trichloroethene | ND | | 4.3 | 0.43 | ug/Kg | 1 | 03/03/15 | JLI | SW8260C |
| Trichlorofluoromethane | 7.0 | | 4.3 | 0.87 | ug/Kg | 1 | 03/03/15 | JLI | SW8260C |
| Trichlorotrifluoroethane | ND | | 4.3 | 0.43 | ug/Kg | 1 | 03/03/15 | JLI | SW8260C |
| Vinyl chloride | ND | | 4.3 | 0.43 | ug/Kg | 1 | 03/03/15 | JLI | SW8260C |
| **QA/QC Surrogates** | | | | | | | | | |
| % 1,2-dichlorobenzene-d4 | 100 | | | | % | 1 | 03/03/15 | JLI | 70 - 130 % |
| % Bromofluorobenzene | 98 | | | | % | 1 | 03/03/15 | JLI | 70 - 130 % |
| % Dibromofluoromethane | 100 | | | | % | 1 | 03/03/15 | JLI | 70 - 130 % |
| % Toluene-d8 | 97 | | | | % | 1 | 03/03/15 | JLI | 70 - 130 % |

## Semivolatiles

| | | | | | | | | | |
|---|---|---|---|---|---|---|---|---|---|
| 1,1-Biphenyl | ND | | 260 | 110 | ug/Kg | 1 | 03/03/15 | DD | SW8270D |
| 1,2,4,5-Tetrachlorobenzene | ND | | 260 | 130 | ug/Kg | 1 | 03/03/15 | DD | SW8270D |
| 2,3,4,6-tetrachlorophenol | ND | | 260 | 170 | ug/Kg | 1 | 03/03/15 | DD | SW8270D |
| 2,4,5-Trichlorophenol | ND | | 260 | 200 | ug/Kg | 1 | 03/03/15 | DD | SW8270D |
| 2,4,6-Trichlorophenol | ND | | 150 | 120 | ug/Kg | 1 | 03/03/15 | DD | SW8270D |
| 2,4-Dichlorophenol | ND | | 150 | 130 | ug/Kg | 1 | 03/03/15 | DD | SW8270D |
| 2,4-Dimethylphenol | ND | | 260 | 90 | ug/Kg | 1 | 03/03/15 | DD | SW8270D |
| 2,4-Dinitrophenol | ND | | 260 | 260 | ug/Kg | 1 | 03/03/15 | DD | SW8270D |
| 2,4-Dinitrotoluene | ND | | 150 | 140 | ug/Kg | 1 | 03/03/15 | DD | SW8270D |
| 2,6-Dinitrotoluene | ND | | 150 | 120 | ug/Kg | 1 | 03/03/15 | DD | SW8270D |
| 2-Chloronaphthalene | ND | | 260 | 100 | ug/Kg | 1 | 03/03/15 | DD | SW8270D |
| 2-Chlorophenol | ND | | 260 | 100 | ug/Kg | 1 | 03/03/15 | DD | SW8270D |
| 2-Methylnaphthalene | ND | | 260 | 110 | ug/Kg | 1 | 03/03/15 | DD | SW8270D |
| 2-Methylphenol (o-cresol) | ND | | 260 | 170 | ug/Kg | 1 | 03/03/15 | DD | SW8270D |
| 2-Nitroaniline | ND | | 1800 | 370 | ug/Kg | 1 | 03/03/15 | DD | SW8270D |
| 2-Nitrophenol | ND | | 260 | 230 | ug/Kg | 1 | 03/03/15 | DD | SW8270D |
| 3&4-Methylphenol (m&p-cresol) | ND | | 260 | 140 | ug/Kg | 1 | 03/03/15 | DD | SW8270D |
| 3,3'-Dichlorobenzidine | ND | | 150 | 150 | ug/Kg | 1 | 03/03/15 | DD | SW8270D |
| 3-Nitroaniline | ND | | 1800 | 790 | ug/Kg | 1 | 03/03/15 | DD | SW8270D |
| 4,6-Dinitro-2-methylphenol | ND | | 260 | 260 | ug/Kg | 1 | 03/03/15 | DD | SW8270D |
| 4-Bromophenyl phenyl ether | ND | | 260 | 110 | ug/Kg | 1 | 03/03/15 | DD | SW8270D |

Project ID: 109 MARBLEDALE RD TUCKAHOE NY
Client ID: TB-8 20-22

Phoenix I.D.: BH78389

| Parameter | Result | RL/ PQL | LOD/ MDL | Units | Dilution | Date/Time | By | Reference | |
|---|---|---|---|---|---|---|---|---|---|
| 4-Chloro-3-methylphenol | ND | 260 | 130 | ug/Kg | 1 | 03/03/15 | DD | SW8270D | |
| 4-Chloroaniline | ND | 730 | 170 | ug/Kg | 1 | 03/03/15 | DD | SW8270D | |
| 4-Chlorophenyl phenyl ether | ND | 260 | 120 | ug/Kg | 1 | 03/03/15 | DD | SW8270D | |
| 4-Nitroaniline | ND | 1800 | 120 | ug/Kg | 1 | 03/03/15 | DD | SW8270D | |
| 4-Nitrophenol | ND | 1800 | 160 | ug/Kg | 1 | 03/03/15 | DD | SW8270D | |
| Acenaphthene | ND | 260 | 110 | ug/Kg | 1 | 03/03/15 | DD | SW8270D | |
| Acenaphthylene | ND | 150 | 100 | ug/Kg | 1 | 03/03/15 | DD | SW8270D | |
| Acetophenone | ND | 260 | 110 | ug/Kg | 1 | 03/03/15 | DD | SW8270D | |
| Anthracene | ND | 260 | 120 | ug/Kg | 1 | 03/03/15 | DD | SW8270D | |
| Atrazine | ND | 150 | 150 | ug/Kg | 1 | 03/03/15 | DD | SW8270D | |
| Benz(a)anthracene | ND | 260 | 120 | ug/Kg | 1 | 03/03/15 | DD | SW8270D | |
| Benzaldehyde | ND | 260 | 110 | ug/Kg | 1 | 03/03/15 | DD | SW8270D | |
| Benzo(a)pyrene | ND | 150 | 120 | ug/Kg | 1 | 03/03/15 | DD | SW8270D | |
| Benzo(b)fluoranthene | ND | 260 | 120 | ug/Kg | 1 | 03/03/15 | DD | SW8270D | |
| Benzo(ghi)perylene | ND | 260 | 120 | ug/Kg | 1 | 03/03/15 | DD | SW8270D | |
| Benzo(k)fluoranthene | ND | 260 | 120 | ug/Kg | 1 | 03/03/15 | DD | SW8270D | |
| Benzyl butyl phthalate | ND | 260 | 94 | ug/Kg | 1 | 03/03/15 | DD | SW8270D | |
| Bis(2-chloroethoxy)methane | ND | 260 | 100 | ug/Kg | 1 | 03/03/15 | DD | SW8270D | |
| Bis(2-chloroethyl)ether | ND | 150 | 98 | ug/Kg | 1 | 03/03/15 | DD | SW8270D | |
| Bis(2-chloroisopropyl)ether | ND | 260 | 100 | ug/Kg | 1 | 03/03/15 | DD | SW8270D | 1 |
| Bis(2-ethylhexyl)phthalate | 290 | 260 | 100 | ug/Kg | 1 | 03/03/15 | DD | SW8270D | |
| Caprolactam | ND | 260 | 260 | ug/Kg | 1 | 03/03/15 | DD | SW8270D | |
| Carbazole | ND | 1800 | 280 | ug/Kg | 1 | 03/03/15 | DD | SW8270D | |
| Chrysene | ND | 260 | 120 | ug/Kg | 1 | 03/03/15 | DD | SW8270D | |
| Dibenz(a,h)anthracene | ND | 150 | 120 | ug/Kg | 1 | 03/03/15 | DD | SW8270D | |
| Dibenzofuran | ND | 260 | 110 | ug/Kg | 1 | 03/03/15 | DD | SW8270D | |
| Diethyl phthalate | ND | 260 | 120 | ug/Kg | 1 | 03/03/15 | DD | SW8270D | |
| Dimethylphthalate | ND | 260 | 110 | ug/Kg | 1 | 03/03/15 | DD | SW8270D | |
| Di-n-butylphthalate | ND | 260 | 97 | ug/Kg | 1 | 03/03/15 | DD | SW8270D | |
| Di-n-octylphthalate | ND | 260 | 94 | ug/Kg | 1 | 03/03/15 | DD | SW8270D | |
| Fluoranthene | ND | 260 | 120 | ug/Kg | 1 | 03/03/15 | DD | SW8270D | |
| Fluorene | ND | 260 | 120 | ug/Kg | 1 | 03/03/15 | DD | SW8270D | |
| Hexachlorobenzene | ND | 150 | 110 | ug/Kg | 1 | 03/03/15 | DD | SW8270D | |
| Hexachlorobutadiene | ND | 260 | 130 | ug/Kg | 1 | 03/03/15 | DD | SW8270D | |
| Hexachlorocyclopentadiene | ND | 260 | 110 | ug/Kg | 1 | 03/03/15 | DD | SW8270D | |
| Hexachloroethane | ND | 150 | 110 | ug/Kg | 1 | 03/03/15 | DD | SW8270D | |
| Indeno(1,2,3-cd)pyrene | ND | 260 | 120 | ug/Kg | 1 | 03/03/15 | DD | SW8270D | |
| Isophorone | ND | 150 | 100 | ug/Kg | 1 | 03/03/15 | DD | SW8270D | |
| Naphthalene | ND | 260 | 100 | ug/Kg | 1 | 03/03/15 | DD | SW8270D | |
| Nitrobenzene | ND | 150 | 130 | ug/Kg | 1 | 03/03/15 | DD | SW8270D | |
| N-Nitrosodimethylamine | ND | 260 | 100 | ug/Kg | 1 | 03/03/15 | DD | SW8270D | |
| N-Nitrosodi-n-propylamine | ND | 150 | 120 | ug/Kg | 1 | 03/03/15 | DD | SW8270D | |
| N-Nitrosodiphenylamine | ND | 150 | 140 | ug/Kg | 1 | 03/03/15 | DD | SW8270D | |
| Pentachlorophenol | ND | 260 | 140 | ug/Kg | 1 | 03/03/15 | DD | SW8270D | |
| Phenanthrene | ND | 150 | 100 | ug/Kg | 1 | 03/03/15 | DD | SW8270D | |
| Phenol | ND | 260 | 120 | ug/Kg | 1 | 03/03/15 | DD | SW8270D | |
| Pyrene | ND | 260 | 130 | ug/Kg | 1 | 03/03/15 | DD | SW8270D | |
| **QA/QC Surrogates** | | | | | | | | | |
| % 2,4,6-Tribromophenol | 89 | | | % | 1 | 03/03/15 | DD | 19 - 122 % | |

Project ID: 109 MARBLEDALE RD TUCKAHOE NY
Client ID: TB-8 20-22

Phoenix I.D.: BH78389

| Parameter | Result | RL/ PQL | LOD/ MDL | Units | Dilution | Date/Time | By | Reference |
|---|---|---|---|---|---|---|---|---|
| % 2-Fluorobiphenyl | 74 | | | % | 1 | 03/03/15 | DD | 30 - 115 % |
| % 2-Fluorophenol | 61 | | | % | 1 | 03/03/15 | DD | 25 - 121 % |
| % Nitrobenzene-d5 | 63 | | | % | 1 | 03/03/15 | DD | 23 - 120 % |
| % Phenol-d5 | 68 | | | % | 1 | 03/03/15 | DD | 24 - 113 % |
| % Terphenyl-d14 | 102 | | | % | 1 | 03/03/15 | DD | 18 - 137 % |

1 = This parameter is not certified by NY NELAC for this matrix. NY NELAC does not offer certification for all parameters at this time.

**RL/PQL=Reporting/Practical Quantitation Level (Equivalent to NELAC LOQ, Limit of Quanitation) ND=Not Detected**
**BRL=Below Reporting Level J=Estimated Below RL LOD=Limit of Detection MDL=Method Detection Limit**

## Comments:

Please be advised that the NY 375 soil criteria for chromium are based on hexavalent chromium and trivalent chromium.

All soils, solids and sludges are reported on a dry weight basis unless otherwise noted in the sample comments.

If there are any questions regarding this data, please call Phoenix Client Services at extension 200.
This report must not be reproduced except in full as defined by the attached chain of custody.

**Phyllis Shiller, Laboratory Director**
**May 01, 2015**
**Reviewed and Released by: Tina Covensky**

1F
SEMIVOLATILE ORGANICS ANALYSIS DATA SHEET
TENTATIVELY IDENTIFIED COMPOUNDS

CLIENT ID
TB-12 4-6

Lab Name: Phoenix Environmental Labs  Client: HESNY-TUCK

Lab Code: Phoenix  Case No.:  SAS No.:  SDG No.: GBH78384

Matrix:(soil/water) SOIL  Lab Sample ID: BH78384

Sample wt/vol: 15.23 (g/mL) g  Lab File ID: 0303_21.D

Level: (low/med) Low  Date Received: 03/02/15

% Moisture: not dec. 18 decanted:(Y/N) NA  Date Extracted: 03/03/15

GPC Cleanup (Y/N): N pH: NA  Date Analyzed: 3/3/2015

Conc. Extract Volume: 1000 (uL)  Dilution Factor 2

Injection Volume: 2 (uL)

Number TICs found: 15  CONCENTRATION UNITS: (ug/L or ug/KG) ug/Kg

| CAS NUMBER | COMPOUND NAME | RT | EST. CONC. | Q |
|---|---|---|---|---|
| | Unknown | 5.481 | 5600 | JN |
| 000629-50-5 | Tridecane | 6.781 | 7600 | JN |
| 002039-89-6 | Benzene, 2-ethenyl-1,4-dimethyl- | 7.439 | 3200 | JN |
| | Unknown | 7.939 | 4200 | JN |
| | Unknown | 8.986 | 6500 | JN |
| 061142-20-9 | Cyclohexane, (4-methylpentyl)- | 9.463 | 3300 | JN |
| 000629-59-4 | Tetradecane | 9.939 | 11000 | JN |
| 031081-17-1 | Nonane, 2-methyl-5-propyl- | 10.469 | 3800 | JN |
| 024251-86-3 | Dodecane, 5,8-diethyl- | 12.004 | 3500 | JN |
| 000629-78-7 | Heptadecane | 12.427 | 8100 | JN |
| 000629-97-0 | Docosane | 13.163 | 5400 | JN |
| | Unknown | 13.863 | 4700 | JN |
| | Unknown | 14.021 | 3800 | JN |
| 000112-95-8 | Eicosane | 14.527 | 4300 | JN |
| | Unknown | 15.774 | 3300 | JN |

1F
SEMIVOLATILE ORGANICS ANALYSIS DATA SHEET
TENTATIVELY IDENTIFIED COMPOUNDS

CLIENT ID

TB-12 28-30

Lab Name: Phoenix Environmental Labs  Client: HESNY-TUCK

Lab Code: Phoenix  Case No.:  SAS No.:  SDG No.: GBH78384

Matrix:(soil/water) SOIL  Lab Sample ID: BH78385

Sample wt/vol: 15.44 (g/mL) g  Lab File ID: 0302_17.D

Level: (low/med) Low  Date Received: 03/02/15

% Moisture: not dec. 16 decanted:(Y/N) NA  Date Extracted: 03/02/15

GPC Cleanup (Y/N): N pH: NA  Date Analyzed: 3/2/2015

Conc. Extract Volume: 1000 (uL)  Dilution Factor 1

Injection Volume: 2 (uL)

Number TICs found: 15  CONCENTRATION UNITS: (ug/L or ug/KG) ug/Kg

| CAS NUMBER | COMPOUND NAME | RT | EST. CONC. | Q |
|---|---|---|---|---|
| | Unknown | 3.775 | 1700 | JN |
| | Unknown | 14.380 | 370 | JN |
| | Unknown | 14.415 | 570 | JN |
| 000629-97-0 | Docosane | 15.933 | 340 | JN |
| 007225-66-3 | Tridecane, 7-hexyl- | 16.521 | 420 | JN |
| 000112-95-8 | Eicosane | 17.086 | 740 | JN |
| 000630-03-5 | Nonacosane | 17.621 | 590 | JN |
| 013475-75-7 | Pentadecane, 8-hexyl- | 18.156 | 520 | JN |
| 055124-79-3 | Heptadecane, 9-hexyl- | 18.709 | 790 | JN |
| 007225-64-1 | Heptadecane, 9-octyl- | 19.145 | 510 | JN |
| 007098-22-8 | Tetratetracontane | 19.515 | 680 | JN |
| 000192-97-2 | Benzo[e]pyrene | 19.592 | 460 | JN |
| 055282-14-9 | Docosane, 9-butyl- | 19.844 | 480 | JN |
| 000629-94-7 | Heneicosane | 20.197 | 520 | JN |
| | Unknown | 20.662 | 330 | JN |

1F
SEMIVOLATILE ORGANICS ANALYSIS DATA SHEET
TENTATIVELY IDENTIFIED COMPOUNDS

CLIENT ID

TB-11 4-6

Lab Name: Phoenix Environmental Labs  Client: HESNY-TUCK

Lab Code: Phoenix  Case No.:  SAS No.:  SDG No.: GBH78384

Matrix:(soil/water) SOIL  Lab Sample ID: BH78386

Sample wt/vol: 15.24 (g/mL) g  Lab File ID: 0303_22.D

Level: (low/med) Low  Date Received: 03/02/15

% Moisture: not dec. 12 decanted:(Y/N) NA  Date Extracted: 03/03/15

GPC Cleanup (Y/N): N pH: NA  Date Analyzed: 3/3/2015

Conc. Extract Volume: 1000 (uL)  Dilution Factor 10

Injection Volume: 2 (uL)

Number TICs found: 0  CONCENTRATION UNITS: (ug/L or ug/KG) ug/Kg

| CAS NUMBER | COMPOUND NAME | RT | EST. CONC. | Q |
|---|---|---|---|---|
| | | | | |

FORM I SEMIVOA-TIC

1F
SEMIVOLATILE ORGANICS ANALYSIS DATA SHEET
TENTATIVELY IDENTIFIED COMPOUNDS

CLIENT ID

TB-11 21-23

Lab Name: Phoenix Environmental Labs  Client: HESNY-TUCK

Lab Code: Phoenix  Case No.:  SAS No.:  SDG No.: GBH78384

Matrix:(soil/water) SOIL  Lab Sample ID: BH78387

Sample wt/vol: 15.12 (g/mL) g  Lab File ID: 0303_23.D

Level: (low/med) Low  Date Received: 03/02/15

% Moisture: not dec. 15 decanted:(Y/N) NA  Date Extracted: 03/03/15

GPC Cleanup (Y/N): N pH: NA  Date Analyzed: 3/3/2015

Conc. Extract Volume: 1000 (uL)  Dilution Factor 10

Injection Volume: 2 (uL)

Number TICs found: 0  CONCENTRATION UNITS: (ug/L or ug/KG) ug/Kg

| CAS NUMBER | COMPOUND NAME | RT | EST. CONC. | Q |
|---|---|---|---|---|
| | | | | |

FORM I SEMIVOA-TIC

1F
SEMIVOLATILE ORGANICS ANALYSIS DATA SHEET
TENTATIVELY IDENTIFIED COMPOUNDS

CLIENT ID
TB-8 2-4

Lab Name: Phoenix Environmental Labs  Client: HESNY-TUCK

Lab Code: Phoenix  Case No.:  SAS No.:  SDG No.: GBH78384

Matrix:(soil/water) SOIL  Lab Sample ID: BH78388

Sample wt/vol: 15.02 (g/mL) g  Lab File ID: 0302_18.D

Level: (low/med) Low  Date Received: 03/02/15

% Moisture: not dec. 10 decanted:(Y/N) NA  Date Extracted: 03/03/15

GPC Cleanup (Y/N): N pH: NA  Date Analyzed: 3/3/2015

Conc. Extract Volume: 1000 (uL)  Dilution Factor 1

Injection Volume: 2 (uL)

Number TICs found: 2  CONCENTRATION UNITS: (ug/L or ug/KG) ug/Kg

| CAS NUMBER | COMPOUND NAME | RT | EST. CONC. | Q |
|---|---|---|---|---|
| 000123-42-2 | 2-Pentanone, 4-hydroxy-4-methyl- | 3.769 | 1300 | JNA |
| | Unknown | 19.086 | 300 | JN |

FORM I SEMIVOA-TIC

1F
SEMIVOLATILE ORGANICS ANALYSIS DATA SHEET
TENTATIVELY IDENTIFIED COMPOUNDS

CLIENT ID

TB-8 20-22

Lab Name: Phoenix Environmental Labs  Client: HESNY-TUCK

Lab Code: Phoenix  Case No.:  SAS No.:  SDG No.: GBH78384

Matrix:(soil/water) SOIL  Lab Sample ID: BH78389

Sample wt/vol: 15.08 (g/mL) g  Lab File ID: 0302_20.D

Level: (low/med) Low  Date Received: 03/02/15

% Moisture: not dec. 9 decanted:(Y/N) NA  Date Extracted: 03/03/15

GPC Cleanup (Y/N): N pH: NA  Date Analyzed: 3/3/2015

Conc. Extract Volume: 1000 (uL)  Dilution Factor 1

Injection Volume: 2 (uL)

Number TICs found: 2  CONCENTRATION UNITS: (ug/L or ug/KG) ug/Kg

| CAS NUMBER | COMPOUND NAME | RT | EST. CONC. | Q |
|---|---|---|---|---|
| 000123-42-2 | 2-Pentanone, 4-hydroxy-4-methyl- | 3.769 | 910 | JNA |
| | Unknown | 19.086 | 540 | JN |

FORM I SEMIVOA-TIC

PHOENIX

Environmental Laboratories, Inc.
587 East Middle Turnpike, P.O.Box 370, Manchester, CT 06045
Tel. (860) 645-1102 Fax (860) 645-0823

ACCREDITED IN ACCORDANCE WITH nelac
NY # 11301

# QA/QC Report

May 01, 2015

## QA/QC Data

SDG I.D.: GBH78384

| Parameter | Blank | Sample Result | Dup Result | Dup RPD | LCS % | LCSD % | LCS RPD | MS % | MSD % | MS RPD | % Rec Limits | % RPD Limits | |
|---|---|---|---|---|---|---|---|---|---|---|---|---|---|
| QA/QC Batch 300603 (mg/kg), QC Sample No: BH78166 (BH78384, BH78385, BH78386, BH78387, BH78388, BH78389) | | | | | | | | | | | | | |
| Mercury - Soil | BRL | <0.03 | <0.03 | NC | 97.0 | 101 | 4.0 | 105 | 98.8 | 6.1 | 75 - 125 | 30 | |
| QA/QC Batch 300557 (mg/kg), QC Sample No: BH78307 (BH78384, BH78385, BH78386, BH78387, BH78388, BH78389) | | | | | | | | | | | | | |
| **ICP Metals - Soil** | | | | | | | | | | | | | |
| Aluminum | BRL | 5790 | 6480 | 11.2 | 103 | 99.1 | 3.9 | NC | NC | NC | 80 - 120 | 30 | |
| Antimony | BRL | <1.8 | <3.6 | NC | 105 | 110 | 4.7 | 88.6 | 90.4 | 2.0 | 70 - 130 | 30 | |
| Arsenic | BRL | 1.3 | 1.47 | NC | 99.2 | 97.0 | 2.2 | 92.0 | 94.5 | 2.7 | 80 - 120 | 30 | |
| Barium | BRL | 62.5 | 49.3 | 23.6 | 111 | 112 | 0.9 | 91.1 | 94.3 | 3.5 | 80 - 120 | 30 | |
| Beryllium | BRL | 0.31 | 0.33 | NC | 103 | 101 | 2.0 | 96.6 | 94.6 | 2.1 | 80 - 120 | 30 | |
| Cadmium | BRL | <0.36 | <0.36 | NC | 88.6 | 89.6 | 1.1 | 92.6 | 95.9 | 3.5 | 80 - 120 | 30 | |
| Calcium | BRL | 310 | 385 | 21.6 | 103 | 102 | 1.0 | >130 | >130 | NC | 80 - 120 | 30 | m |
| Chromium | BRL | 12.2 | 13.3 | 8.60 | 103 | 106 | 2.9 | 103 | 104 | 1.0 | 80 - 120 | 30 | |
| Cobalt | BRL | 5.19 | 6.00 | 14.5 | 88.1 | 89.9 | 2.0 | 96.4 | 99.4 | 3.1 | 80 - 120 | 30 | |
| Copper | BRL | 10.7 | 11.4 | 6.30 | 95.1 | 94.8 | 0.3 | 104 | 107 | 2.8 | 80 - 120 | 30 | |
| Iron | BRL | 13500 | 16000 | 16.9 | 87.9 | 90.3 | 2.7 | NC | NC | NC | 80 - 120 | 30 | |
| Lead | BRL | 4.6 | 4.32 | 6.30 | 91.5 | 93.9 | 2.6 | 93.6 | 96.8 | 3.4 | 80 - 120 | 30 | |
| Magnesium | BRL | 1310 | 1530 | 15.5 | 103 | 102 | 1.0 | NC | NC | NC | 80 - 120 | 30 | |
| Manganese | BRL | 503 | 462 | 8.50 | 111 | 110 | 0.9 | 105 | 65.4 | 46.5 | 80 - 120 | 30 | m,r |
| Nickel | BRL | 8.91 | 9.24 | 3.60 | 101 | 102 | 1.0 | 96.1 | 99.4 | 3.4 | 80 - 120 | 30 | |
| Potassium | BRL | 686 | 653 | 4.90 | 96.4 | 90.9 | 5.9 | >130 | >130 | NC | 80 - 120 | 30 | m |
| Selenium | BRL | <1.4 | <1.4 | NC | 87.8 | 89.2 | 1.6 | 79.3 | 82.1 | 3.5 | 80 - 120 | 30 | |
| Silver | BRL | <0.36 | <0.36 | NC | 102 | 103 | 1.0 | 96.9 | 100 | 3.1 | 70 - 130 | 30 | |
| Sodium | BRL | 414 | 459 | 10.3 | 109 | 103 | 5.7 | >130 | >130 | NC | 80 - 120 | 30 | m |
| Thallium | BRL | <1.4 | <3.2 | NC | 100 | 101 | 1.0 | 94.8 | 98.0 | 3.3 | 80 - 120 | 30 | |
| Vanadium | BRL | 20.2 | 22.7 | 11.7 | 110 | 115 | 4.4 | 104 | 105 | 1.0 | 80 - 120 | 30 | |
| Zinc | BRL | 19.2 | 21.1 | 9.40 | 91.8 | 91.7 | 0.1 | 95.6 | 98.4 | 2.9 | 80 - 120 | 30 | |

m = This parameter is outside laboratory ms/msd specified recovery limits.
r = This parameter is outside laboratory rpd specified recovery limits.

PHOENIX

Environmental Laboratories, Inc.
587 East Middle Turnpike, P.O.Box 370, Manchester, CT 06045
Tel. (860) 645-1102 Fax (860) 645-0823

ACCREDITED IN ACCORDANCE WITH nelac
NY # 11301

# QA/QC Report

May 01, 2015

## QA/QC Data

SDG I.D.: GBH78384

| Parameter | Blank | Sample Result | Dup Result | Dup RPD | LCS % | LCSD % | LCS RPD | MS % | MSD % | MS RPD | % Rec Limits | % RPD Limits |
|---|---|---|---|---|---|---|---|---|---|---|---|---|
| QA/QC Batch 300565 (mg/Kg), QC Sample No: BH78151 (BH78384, BH78385, BH78386) | | | | | | | | | | | | |
| Total Cyanide (SW9010C Distill.) | BRL | <0.58 | <0.53 | NC | 96.7 | | | 90.0 | | | 85 - 115 | 30 |
| QA/QC Batch 300799 (mg/Kg), QC Sample No: BH78389 (BH78387, BH78388, BH78389) | | | | | | | | | | | | |
| Total Cyanide (SW9010C Distill.) | BRL | 2.93 | 3.36 | 13.7 | 103 | | | 101 | | | 85 - 115 | 30 |

PHOENIX

Environmental Laboratories, Inc.
587 East Middle Turnpike, P.O.Box 370, Manchester, CT 06045
Tel. (860) 645-1102 Fax (860) 645-0823

ACCREDITED IN ACCORDANCE WITH nelac NY # 11301

# QA/QC Report

May 01, 2015

## QA/QC Data

SDG I.D.: GBH78384

QA/QC Batch 300444 (ug/kg), QC Sample No: BH77859 (BH78384, BH78385, BH78386, BH78387, BH78388, BH78389)

### Semivolatiles - Solid

| Parameter | Blank | LCS % | LCSD % | LCS RPD | MS % | MSD % | MS RPD | % Rec Limits | % RPD Limits | |
|---|---|---|---|---|---|---|---|---|---|---|
| 1,1-Biphenyl | ND | 76 | 79 | 3.9 | 84 | 83 | 1.2 | 30 - 130 | 30 | |
| 1,2,4,5-Tetrachlorobenzene | ND | 77 | 82 | 6.3 | 84 | 86 | 2.4 | 30 - 130 | 30 | |
| 2,3,4,6-tetrachlorophenol | ND | 94 | 98 | 4.2 | 104 | 104 | 0.0 | 30 - 130 | 30 | |
| 2,4,5-Trichlorophenol | ND | 88 | 92 | 4.4 | 98 | 98 | 0.0 | 30 - 130 | 30 | |
| 2,4,6-Trichlorophenol | ND | 87 | 91 | 4.5 | 94 | 94 | 0.0 | 30 - 130 | 30 | |
| 2,4-Dichlorophenol | ND | 82 | 88 | 7.1 | 89 | 91 | 2.2 | 30 - 130 | 30 | |
| 2,4-Dimethylphenol | ND | 78 | 80 | 2.5 | 81 | 77 | 5.1 | 30 - 130 | 30 | |
| 2,4-Dinitrophenol | ND | 26 | 31 | 17.5 | 18 | 21 | 15.4 | 30 - 130 | 30 | l,m |
| 2,4-Dinitrotoluene | ND | 88 | 90 | 2.2 | 94 | 94 | 0.0 | 30 - 130 | 30 | |
| 2,6-Dinitrotoluene | ND | 86 | 90 | 4.5 | 94 | 94 | 0.0 | 30 - 130 | 30 | |
| 2-Chloronaphthalene | ND | 77 | 81 | 5.1 | 85 | 85 | 0.0 | 30 - 130 | 30 | |
| 2-Chlorophenol | ND | 75 | 81 | 7.7 | 83 | 84 | 1.2 | 30 - 130 | 30 | |
| 2-Methylnaphthalene | ND | 80 | 85 | 6.1 | 87 | 89 | 2.3 | 30 - 130 | 30 | |
| 2-Methylphenol (o-cresol) | ND | 74 | 79 | 6.5 | 79 | 80 | 1.3 | 30 - 130 | 30 | |
| 2-Nitroaniline | ND | 89 | 95 | 6.5 | 86 | 91 | 5.6 | 30 - 130 | 30 | |
| 2-Nitrophenol | ND | 79 | 84 | 6.1 | 88 | 90 | 2.2 | 30 - 130 | 30 | |
| 3&4-Methylphenol (m&p-cresol) | ND | 82 | 87 | 5.9 | 86 | 88 | 2.3 | 30 - 130 | 30 | |
| 3,3'-Dichlorobenzidine | ND | 76 | 82 | 7.6 | 77 | 78 | 1.3 | 30 - 130 | 30 | |
| 3-Nitroaniline | ND | 85 | 89 | 4.6 | 87 | 92 | 5.6 | 30 - 130 | 30 | |
| 4,6-Dinitro-2-methylphenol | ND | 49 | 57 | 15.1 | 75 | 78 | 3.9 | 30 - 130 | 30 | |
| 4-Bromophenyl phenyl ether | ND | 81 | 85 | 4.8 | 92 | 90 | 2.2 | 30 - 130 | 30 | |
| 4-Chloro-3-methylphenol | ND | 88 | 93 | 5.5 | 94 | 96 | 2.1 | 30 - 130 | 30 | |
| 4-Chloroaniline | ND | 74 | 77 | 4.0 | 76 | 77 | 1.3 | 30 - 130 | 30 | |
| 4-Chlorophenyl phenyl ether | ND | 81 | 84 | 3.6 | 88 | 87 | 1.1 | 30 - 130 | 30 | |
| 4-Nitroaniline | ND | 85 | 90 | 5.7 | 92 | 93 | 1.1 | 30 - 130 | 30 | |
| 4-Nitrophenol | ND | 93 | 100 | 7.3 | 97 | 98 | 1.0 | 30 - 130 | 30 | |
| Acenaphthene | ND | 84 | 88 | 4.7 | 91 | 90 | 1.1 | 30 - 130 | 30 | |
| Acenaphthylene | ND | 78 | 81 | 3.8 | 85 | 84 | 1.2 | 30 - 130 | 30 | |
| Acetophenone | ND | 78 | 83 | 6.2 | 84 | 86 | 2.4 | 30 - 130 | 30 | |
| Anthracene | ND | 81 | 87 | 7.1 | 91 | 89 | 2.2 | 30 - 130 | 30 | |
| Atrazine | ND | 80 | 82 | 2.5 | 91 | 82 | 10.4 | 30 - 130 | 30 | |
| Benz(a)anthracene | ND | 84 | 89 | 5.8 | 90 | 90 | 0.0 | 30 - 130 | 30 | |
| Benzaldehyde | ND | 53 | 63 | 17.2 | 125 | 141 | 12.0 | 30 - 130 | 30 | m |
| Benzo(a)pyrene | ND | 81 | 86 | 6.0 | 89 | 89 | 0.0 | 30 - 130 | 30 | |
| Benzo(b)fluoranthene | ND | 78 | 82 | 5.0 | 88 | 85 | 3.5 | 30 - 130 | 30 | |
| Benzo(ghi)perylene | ND | 90 | 96 | 6.5 | 101 | 99 | 2.0 | 30 - 130 | 30 | |
| Benzo(k)fluoranthene | ND | 81 | 87 | 7.1 | 88 | 89 | 1.1 | 30 - 130 | 30 | |
| Benzyl butyl phthalate | ND | 85 | 88 | 3.5 | 97 | 92 | 5.3 | 30 - 130 | 30 | |
| Bis(2-chloroethoxy)methane | ND | 80 | 83 | 3.7 | 86 | 86 | 0.0 | 30 - 130 | 30 | |
| Bis(2-chloroethyl)ether | ND | 64 | 68 | 6.1 | 68 | 71 | 4.3 | 30 - 130 | 30 | |
| Bis(2-chloroisopropyl)ether | ND | 66 | 70 | 5.9 | 72 | 73 | 1.4 | 30 - 130 | 30 | |

# QA/QC Data

SDG I.D.: GBH78384

| Parameter | Blank | LCS % | LCSD % | LCS RPD | MS % | MSD % | MS RPD | % Rec Limits | % RPD Limits |
|---|---|---|---|---|---|---|---|---|---|
| Bis(2-ethylhexyl)phthalate | ND | 85 | 88 | 3.5 | 96 | 91 | 5.3 | 30 - 130 | 30 |
| Caprolactam | ND | 78 | 80 | 2.5 | 87 | 87 | 0.0 | 30 - 130 | 30 |
| Carbazole | ND | 84 | 89 | 5.8 | 92 | 87 | 5.6 | 30 - 130 | 30 |
| Chrysene | ND | 88 | 93 | 5.5 | 95 | 96 | 1.0 | 30 - 130 | 30 |
| Dibenz(a,h)anthracene | ND | 89 | 95 | 6.5 | 101 | 98 | 3.0 | 30 - 130 | 30 |
| Dibenzofuran | ND | 83 | 88 | 5.8 | 90 | 90 | 0.0 | 30 - 130 | 30 |
| Diethyl phthalate | ND | 85 | 85 | 0.0 | 91 | 89 | 2.2 | 30 - 130 | 30 |
| Dimethylphthalate | ND | 83 | 85 | 2.4 | 91 | 89 | 2.2 | 30 - 130 | 30 |
| Di-n-butylphthalate | ND | 77 | 80 | 3.8 | 88 | 80 | 9.5 | 30 - 130 | 30 |
| Di-n-octylphthalate | ND | 90 | 95 | 5.4 | 97 | 97 | 0.0 | 30 - 130 | 30 |
| Fluoranthene | ND | 79 | 85 | 7.3 | 90 | 86 | 4.5 | 30 - 130 | 30 |
| Fluorene | ND | 82 | 85 | 3.6 | 89 | 88 | 1.1 | 30 - 130 | 30 |
| Hexachlorobenzene | ND | 79 | 82 | 3.7 | 90 | 84 | 6.9 | 30 - 130 | 30 |
| Hexachlorobutadiene | ND | 74 | 77 | 4.0 | 82 | 82 | 0.0 | 30 - 130 | 30 |
| Hexachlorocyclopentadiene | ND | 90 | 100 | 10.5 | 91 | 102 | 11.4 | 30 - 130 | 30 |
| Hexachloroethane | ND | 66 | 71 | 7.3 | 72 | 73 | 1.4 | 30 - 130 | 30 |
| Indeno(1,2,3-cd)pyrene | ND | 89 | 96 | 7.6 | 101 | 99 | 2.0 | 30 - 130 | 30 |
| Isophorone | ND | 75 | 77 | 2.6 | 81 | 80 | 1.2 | 30 - 130 | 30 |
| Naphthalene | ND | 74 | 80 | 7.8 | 81 | 83 | 2.4 | 30 - 130 | 30 |
| Nitrobenzene | ND | 73 | 79 | 7.9 | 79 | 82 | 3.7 | 30 - 130 | 30 |
| N-Nitrosodimethylamine | ND | 58 | 62 | 6.7 | 63 | 63 | 0.0 | 30 - 130 | 30 |
| N-Nitrosodi-n-propylamine | ND | 76 | 80 | 5.1 | 82 | 83 | 1.2 | 30 - 130 | 30 |
| N-Nitrosodiphenylamine | ND | 85 | 87 | 2.3 | 89 | 91 | 2.2 | 30 - 130 | 30 |
| Pentachlorophenol | ND | 104 | 114 | 9.2 | 127 | 124 | 2.4 | 30 - 130 | 30 |
| Phenanthrene | ND | 82 | 86 | 4.8 | 91 | 88 | 3.4 | 30 - 130 | 30 |
| Phenol | ND | 71 | 77 | 8.1 | 77 | 79 | 2.6 | 30 - 130 | 30 |
| Pyrene | ND | 79 | 83 | 4.9 | 90 | 85 | 5.7 | 30 - 130 | 30 |
| % 2,4,6-Tribromophenol | 100 | 83 | 88 | 5.8 | 92 | 91 | 1.1 | 30 - 130 | 30 |
| % 2-Fluorobiphenyl | 77 | 75 | 79 | 5.2 | 83 | 83 | 0.0 | 30 - 115 | 30 |
| % 2-Fluorophenol | 64 | 70 | 75 | 6.9 | 76 | 77 | 1.3 | 30 - 130 | 30 |
| % Nitrobenzene-d5 | 67 | 71 | 78 | 9.4 | 77 | 80 | 3.8 | 23 - 120 | 30 |
| % Phenol-d5 | 70 | 73 | 79 | 7.9 | 79 | 81 | 2.5 | 30 - 130 | 30 |
| % Terphenyl-d14 | 88 | 84 | 90 | 6.9 | 98 | 93 | 5.2 | 18 - 137 | 30 |

QA/QC Batch 300456 (ug/Kg), QC Sample No: BH78084 2X (BH78384, BH78385, BH78386, BH78387, BH78388, BH78389)

## Polychlorinated Biphenyls - Solid

| | | | | | | | | | |
|---|---|---|---|---|---|---|---|---|---|
| PCB-1016 | ND | 95 | 95 | 0.0 | 92 | 89 | 3.3 | 30 - 120 | 15 |
| PCB-1221 | ND | | | | | | | 30 - 150 | 30 |
| PCB-1232 | ND | | | | | | | 30 - 150 | 30 |
| PCB-1242 | ND | | | | | | | 30 - 150 | 30 |
| PCB-1248 | ND | | | | | | | 30 - 150 | 30 |
| PCB-1254 | ND | | | | | | | 30 - 150 | 30 |
| PCB-1260 | ND | 99 | 99 | 0.0 | 96 | 95 | 1.0 | 30 - 150 | 20 |
| PCB-1262 | ND | | | | | | | 30 - 150 | 30 |
| PCB-1268 | ND | | | | | | | 30 - 150 | 30 |
| % DCBP (Surrogate Rec) | 83 | 103 | 102 | 1.0 | 99 | 97 | 2.0 | 30 - 150 | 20 |
| % TCMX (Surrogate Rec) | 69 | 102 | 102 | 0.0 | 94 | 92 | 2.2 | 30 - 150 | 20 |

QA/QC Batch 300701 (ug/kg), QC Sample No: BH78389 (BH78385, BH78386, BH78387, BH78388 (1X, 38X) , BH78389 (1X, 36X) )

## Volatiles (TCL) - Solid

| | | | | | | | | | |
|---|---|---|---|---|---|---|---|---|---|
| 1,1,1-Trichloroethane | ND | 119 | 123 | 3.3 | 115 | 114 | 0.9 | 70 - 130 | 30 |
| 1,1,2,2-Tetrachloroethane | ND | 121 | 122 | 0.8 | 95 | 104 | 9.0 | 70 - 130 | 30 |
| 1,1,2-Trichloroethane | ND | 116 | 117 | 0.9 | 106 | 110 | 3.7 | 70 - 130 | 30 |
| 1,1-Dichloroethane | ND | 120 | 121 | 0.8 | 116 | 116 | 0.0 | 70 - 130 | 30 |

# QA/QC Data

SDG I.D.: GBH78384

| Parameter | Blank | LCS % | LCSD % | LCS RPD | MS % | MSD % | MS RPD | % Rec Limits | % RPD Limits | |
|---|---|---|---|---|---|---|---|---|---|---|
| 1,1-Dichloroethene | ND | 125 | 123 | 1.6 | 119 | 114 | 4.3 | 70 - 130 | 30 | |
| 1,2,3-Trichlorobenzene | ND | 107 | 108 | 0.9 | 85 | 91 | 6.8 | 70 - 130 | 30 | |
| 1,2,4-Trichlorobenzene | ND | 105 | 106 | 0.9 | 82 | 88 | 7.1 | 70 - 130 | 30 | |
| 1,2-Dibromo-3-chloropropane | ND | 116 | 117 | 0.9 | 91 | 106 | 15.2 | 70 - 130 | 30 | |
| 1,2-Dibromoethane | ND | 118 | 120 | 1.7 | 107 | 111 | 3.7 | 70 - 130 | 30 | |
| 1,2-Dichlorobenzene | ND | 107 | 109 | 1.9 | 96 | 99 | 3.1 | 70 - 130 | 30 | |
| 1,2-Dichloroethane | ND | 115 | 117 | 1.7 | 105 | 109 | 3.7 | 70 - 130 | 30 | |
| 1,2-Dichloropropane | ND | 121 | 122 | 0.8 | 117 | 117 | 0.0 | 70 - 130 | 30 | |
| 1,3-Dichlorobenzene | ND | 107 | 110 | 2.8 | 98 | 100 | 2.0 | 70 - 130 | 30 | |
| 1,4-Dichlorobenzene | ND | 113 | 114 | 0.9 | 102 | 104 | 1.9 | 70 - 130 | 30 | |
| 1,4-dioxane | ND | 108 | 116 | 7.1 | 141 | 113 | 22.0 | 70 - 130 | 30 | m |
| 2-Hexanone | ND | 105 | 106 | 0.9 | 94 | 102 | 8.2 | 70 - 130 | 30 | |
| 4-Methyl-2-pentanone | ND | 113 | 117 | 3.5 | 100 | 112 | 11.3 | 70 - 130 | 30 | |
| Acetone | ND | 108 | 104 | 3.8 | 77 | 88 | 13.3 | 70 - 130 | 30 | |
| Benzene | ND | 119 | 120 | 0.8 | 116 | 114 | 1.7 | 70 - 130 | 30 | |
| Bromochloromethane | ND | 122 | 120 | 1.7 | 109 | 112 | 2.7 | 70 - 130 | 30 | |
| Bromodichloromethane | ND | 124 | 125 | 0.8 | 111 | 113 | 1.8 | 70 - 130 | 30 | |
| Bromoform | ND | 115 | 116 | 0.9 | 94 | 101 | 7.2 | 70 - 130 | 30 | |
| Bromomethane | ND | 111 | 114 | 2.7 | 117 | 118 | 0.9 | 70 - 130 | 30 | |
| Carbon Disulfide | ND | 145 | 147 | 1.4 | 123 | 119 | 3.3 | 70 - 130 | 30 | l |
| Carbon tetrachloride | ND | 118 | 121 | 2.5 | 111 | 111 | 0.0 | 70 - 130 | 30 | |
| Chlorobenzene | ND | 114 | 115 | 0.9 | 105 | 105 | 0.0 | 70 - 130 | 30 | |
| Chloroethane | ND | 107 | 107 | 0.0 | 116 | 112 | 3.5 | 70 - 130 | 30 | |
| Chloroform | ND | 119 | 120 | 0.8 | 114 | 114 | 0.0 | 70 - 130 | 30 | |
| Chloromethane | ND | 117 | 120 | 2.5 | 124 | 122 | 1.6 | 70 - 130 | 30 | |
| cis-1,2-Dichloroethene | ND | 122 | 122 | 0.0 | 116 | 116 | 0.0 | 70 - 130 | 30 | |
| cis-1,3-Dichloropropene | ND | 127 | 129 | 1.6 | 113 | 116 | 2.6 | 70 - 130 | 30 | |
| Cyclohexane | ND | 109 | 110 | 0.9 | 121 | 118 | 2.5 | 70 - 130 | 30 | |
| Dibromochloromethane | ND | 117 | 120 | 2.5 | 100 | 104 | 3.9 | 70 - 130 | 30 | |
| Dichlorodifluoromethane | ND | 120 | 118 | 1.7 | 129 | 124 | 4.0 | 70 - 130 | 30 | |
| Ethylbenzene | ND | 116 | 116 | 0.0 | 110 | 109 | 0.9 | 70 - 130 | 30 | |
| Isopropylbenzene | ND | 107 | 110 | 2.8 | 108 | 108 | 0.0 | 70 - 130 | 30 | |
| m&p-Xylene | ND | 114 | 113 | 0.9 | 109 | 107 | 1.9 | 70 - 130 | 30 | |
| Methyl ethyl ketone | ND | 105 | 109 | 3.7 | 93 | 98 | 5.2 | 70 - 130 | 30 | |
| Methyl t-butyl ether (MTBE) | ND | 114 | 117 | 2.6 | 102 | 107 | 4.8 | 70 - 130 | 30 | |
| Methylacetate | ND | 117 | 119 | 1.7 | 102 | 111 | 8.5 | 70 - 130 | 30 | |
| Methylcyclohexane | ND | 107 | 108 | 0.9 | 114 | 111 | 2.7 | 70 - 130 | 30 | |
| Methylene chloride | ND | 116 | 116 | 0.0 | 83 | 104 | 22.5 | 70 - 130 | 30 | |
| o-Xylene | ND | 116 | 116 | 0.0 | 110 | 111 | 0.9 | 70 - 130 | 30 | |
| Styrene | ND | 114 | 116 | 1.7 | 107 | 108 | 0.9 | 70 - 130 | 30 | |
| Tetrachloroethene | ND | 112 | 113 | 0.9 | 105 | 105 | 0.0 | 70 - 130 | 30 | |
| Toluene | ND | 118 | 119 | 0.8 | 114 | 114 | 0.0 | 70 - 130 | 30 | |
| trans-1,2-Dichloroethene | ND | 126 | 127 | 0.8 | 119 | 117 | 1.7 | 70 - 130 | 30 | |
| trans-1,3-Dichloropropene | ND | 130 | 129 | 0.8 | 109 | 115 | 5.4 | 70 - 130 | 30 | |
| Trichloroethene | ND | 118 | 118 | 0.0 | 118 | 115 | 2.6 | 70 - 130 | 30 | |
| Trichlorofluoromethane | ND | 118 | 119 | 0.8 | 105 | 102 | 2.9 | 70 - 130 | 30 | |
| Trichlorotrifluoroethane | ND | 123 | 119 | 3.3 | 117 | 112 | 4.4 | 70 - 130 | 30 | |
| Vinyl chloride | ND | 114 | 121 | 6.0 | 125 | 120 | 4.1 | 70 - 130 | 30 | |
| % 1,2-dichlorobenzene-d4 | 101 | 99 | 102 | 3.0 | 100 | 100 | 0.0 | 70 - 130 | 30 | |
| % Bromofluorobenzene | 98 | 104 | 103 | 1.0 | 103 | 102 | 1.0 | 70 - 130 | 30 | |
| % Dibromofluoromethane | 99 | 98 | 100 | 2.0 | 95 | 98 | 3.1 | 70 - 130 | 30 | |
| % Toluene-d8 | 97 | 101 | 101 | 0.0 | 102 | 101 | 1.0 | 70 - 130 | 30 | |

# QA/QC Data

SDG I.D.: GBH78384

QA/QC Batch 300840 (ug/kg), QC Sample No: BH78836 (BH78384)

## Volatiles (TCL) - Solid

| Parameter | Blank | LCS % | LCSD % | LCS RPD | MS % | MSD % | MS RPD | % Rec Limits | % RPD Limits | |
|---|---|---|---|---|---|---|---|---|---|---|
| 1,1,1-Trichloroethane | ND | 102 | 111 | 8.5 | 112 | 103 | 8.4 | 70 - 130 | 30 | |
| 1,1,2,2-Tetrachloroethane | ND | 116 | 124 | 6.7 | 136 | 108 | 23.0 | 70 - 130 | 30 | m |
| 1,1,2-Trichloroethane | ND | 97 | 105 | 7.9 | 106 | 94 | 12.0 | 70 - 130 | 30 | |
| 1,1-Dichloroethane | ND | 105 | 112 | 6.5 | 114 | 105 | 8.2 | 70 - 130 | 30 | |
| 1,1-Dichloroethene | ND | 105 | 114 | 8.2 | 114 | 101 | 12.1 | 70 - 130 | 30 | |
| 1,2,3-Trichlorobenzene | ND | 100 | 110 | 9.5 | 94 | 77 | 19.9 | 70 - 130 | 30 | |
| 1,2,4-Trichlorobenzene | ND | 98 | 109 | 10.6 | 95 | 77 | 20.9 | 70 - 130 | 30 | |
| 1,2-Dibromo-3-chloropropane | ND | 105 | 113 | 7.3 | 123 | 95 | 25.7 | 70 - 130 | 30 | |
| 1,2-Dibromoethane | ND | 98 | 106 | 7.8 | 105 | 94 | 11.1 | 70 - 130 | 30 | |
| 1,2-Dichlorobenzene | ND | 102 | 112 | 9.3 | 111 | 91 | 19.8 | 70 - 130 | 30 | |
| 1,2-Dichloroethane | ND | 97 | 105 | 7.9 | 103 | 93 | 10.2 | 70 - 130 | 30 | |
| 1,2-Dichloropropane | ND | 104 | 112 | 7.4 | 111 | 103 | 7.5 | 70 - 130 | 30 | |
| 1,3-Dichlorobenzene | ND | 100 | 112 | 11.3 | 112 | 93 | 18.5 | 70 - 130 | 30 | |
| 1,4-Dichlorobenzene | ND | 106 | 118 | 10.7 | 119 | 97 | 20.4 | 70 - 130 | 30 | |
| 1,4-dioxane | ND | 109 | 103 | 5.7 | 119 | 110 | 7.9 | 70 - 130 | 30 | |
| 2-Hexanone | ND | 96 | 105 | 9.0 | 104 | 85 | 20.1 | 70 - 130 | 30 | |
| 4-Methyl-2-pentanone | ND | 99 | 105 | 5.9 | 105 | 90 | 15.4 | 70 - 130 | 30 | |
| Acetone | 8.4 JBS | 101 | 106 | 4.8 | 87 | 73 | 17.5 | 70 - 130 | 30 | |
| Benzene | ND | 103 | 111 | 7.5 | 111 | 101 | 9.4 | 70 - 130 | 30 | |
| Bromochloromethane | ND | 104 | 114 | 9.2 | 110 | 98 | 11.5 | 70 - 130 | 30 | |
| Bromodichloromethane | ND | 105 | 112 | 6.5 | 107 | 97 | 9.8 | 70 - 130 | 30 | |
| Bromoform | ND | 98 | 109 | 10.6 | 104 | 92 | 12.2 | 70 - 130 | 30 | |
| Bromomethane | ND | 94 | 106 | 12.0 | 106 | 96 | 9.9 | 70 - 130 | 30 | |
| Carbon Disulfide | ND | 123 | 134 | 8.6 | 116 | 106 | 9.0 | 70 - 130 | 30 | l |
| Carbon tetrachloride | ND | 100 | 108 | 7.7 | 106 | 99 | 6.8 | 70 - 130 | 30 | |
| Chlorobenzene | ND | 102 | 112 | 9.3 | 112 | 100 | 11.3 | 70 - 130 | 30 | |
| Chloroethane | ND | 94 | 100 | 6.2 | 109 | 101 | 7.6 | 70 - 130 | 30 | |
| Chloroform | ND | 102 | 111 | 8.5 | 111 | 101 | 9.4 | 70 - 130 | 30 | |
| Chloromethane | ND | 107 | 113 | 5.5 | 119 | 108 | 9.7 | 70 - 130 | 30 | |
| cis-1,2-Dichloroethene | ND | 107 | 114 | 6.3 | 113 | 102 | 10.2 | 70 - 130 | 30 | |
| cis-1,3-Dichloropropene | ND | 107 | 117 | 8.9 | 108 | 98 | 9.7 | 70 - 130 | 30 | |
| Cyclohexane | ND | 97 | 103 | 6.0 | 119 | 109 | 8.8 | 70 - 130 | 30 | |
| Dibromochloromethane | ND | 105 | 113 | 7.3 | 110 | 97 | 12.6 | 70 - 130 | 30 | |
| Dichlorodifluoromethane | ND | 107 | 116 | 8.1 | 117 | 108 | 8.0 | 70 - 130 | 30 | |
| Ethylbenzene | ND | 105 | 116 | 10.0 | 118 | 104 | 12.6 | 70 - 130 | 30 | |
| Isopropylbenzene | ND | 103 | 113 | 9.3 | 128 | 106 | 18.8 | 70 - 130 | 30 | |
| m&p-Xylene | ND | 103 | 113 | 9.3 | 116 | 102 | 12.8 | 70 - 130 | 30 | |
| Methyl ethyl ketone | ND | 94 | 98 | 4.2 | 97 | 82 | 16.8 | 70 - 130 | 30 | |
| Methyl t-butyl ether (MTBE) | ND | 98 | 106 | 7.8 | 101 | 92 | 9.3 | 70 - 130 | 30 | |
| Methylacetate | ND | 100 | 109 | 8.6 | 92 | 78 | 16.5 | 70 - 130 | 30 | |
| Methylcyclohexane | ND | 93 | 100 | 7.3 | 112 | 101 | 10.3 | 70 - 130 | 30 | |
| Methylene chloride | ND | 101 | 108 | 6.7 | 99 | 91 | 8.4 | 70 - 130 | 30 | |
| o-Xylene | ND | 105 | 115 | 9.1 | 116 | 103 | 11.9 | 70 - 130 | 30 | |
| Styrene | ND | 105 | 115 | 9.1 | 111 | 99 | 11.4 | 70 - 130 | 30 | |
| Tetrachloroethene | ND | 100 | 112 | 11.3 | 115 | 102 | 12.0 | 70 - 130 | 30 | |
| Toluene | ND | 101 | 109 | 7.6 | 109 | 100 | 8.6 | 70 - 130 | 30 | |
| trans-1,2-Dichloroethene | ND | 108 | 118 | 8.8 | 114 | 105 | 8.2 | 70 - 130 | 30 | |
| trans-1,3-Dichloropropene | ND | 108 | 117 | 8.0 | 106 | 97 | 8.9 | 70 - 130 | 30 | |
| Trichloroethene | ND | 99 | 106 | 6.8 | 107 | 97 | 9.8 | 70 - 130 | 30 | |
| Trichlorofluoromethane | ND | 100 | 110 | 9.5 | 111 | 102 | 8.5 | 70 - 130 | 30 | |

# QA/QC Data

SDG I.D.: GBH78384

| Parameter | Blank | LCS % | LCSD % | LCS RPD | MS % | MSD % | MS RPD | % Rec Limits | % RPD Limits |
|---|---|---|---|---|---|---|---|---|---|
| Trichlorotrifluoroethane | ND | 104 | 112 | 7.4 | 114 | 104 | 9.2 | 70 - 130 | 30 |
| Vinyl chloride | ND | 102 | 110 | 7.5 | 119 | 110 | 7.9 | 70 - 130 | 30 |
| % 1,2-dichlorobenzene-d4 | 102 | 101 | 100 | 1.0 | 100 | 99 | 1.0 | 70 - 130 | 30 |
| % Bromofluorobenzene | 96 | 100 | 100 | 0.0 | 98 | 99 | 1.0 | 70 - 130 | 30 |
| % Dibromofluoromethane | 100 | 103 | 101 | 2.0 | 99 | 98 | 1.0 | 70 - 130 | 30 |
| % Toluene-d8 | 95 | 101 | 100 | 1.0 | 99 | 100 | 1.0 | 70 - 130 | 30 |

l = This parameter is outside laboratory lcs/lcsd specified recovery limits.
m = This parameter is outside laboratory ms/msd specified recovery limits.

**If there are any questions regarding this data, please call Phoenix Client Services at extension 200.**

RPD - Relative Percent Difference
LCS - Laboratory Control Sample
LCSD - Laboratory Control Sample Duplicate
MS - Matrix Spike
MS Dup - Matrix Spike Duplicate
NC - No Criteria
Intf - Interference

Phyllis Shiller, Laboratory Director
May 01, 2015

# Sample Criteria Exceedences Report

## GBH78384 - HESNY-TUCK



Criteria: NY: 375, 375RRS, 375RS

State: NY

| SampNo | Acode | Phoenix Analyte | Criteria | Result | RL | Criteria | RL Criteria | Analysis Units |
|---|---|---|---|---|---|---|---|---|
| BH78384 | $DP8260_TCLS | Acetone | NY / 375-6.8 Volatiles / Unrestricted Use Soil | 72 | 41 | 50 | 50 | ug/Kg |
| BH78384 | $DP8270_TCL | Benzo(b)fluoranthene | NY / 375-6.8 Semivolatiles / Residential | 2300 | 560 | 1000 | 1000 | ug/Kg |
| BH78384 | $DP8270_TCL | Benz(a)anthracene | NY / 375-6.8 Semivolatiles / Residential | 1400 | 560 | 1000 | 1000 | ug/Kg |
| BH78384 | $DP8270_TCL | Indeno(1,2,3-cd)pyrene | NY / 375-6.8 Semivolatiles / Residential | 1200 | 560 | 500 | 500 | ug/Kg |
| BH78384 | $DP8270_TCL | Chrysene | NY / 375-6.8 Semivolatiles / Residential | 1500 | 560 | 1000 | 1000 | ug/Kg |
| BH78384 | $DP8270_TCL | Benzo(a)pyrene | NY / 375-6.8 Semivolatiles / Residential | 2100 | 320 | 1000 | 1000 | ug/Kg |
| BH78384 | $DP8270_TCL | Indeno(1,2,3-cd)pyrene | NY / 375-6.8 Semivolatiles / Residential Restricted | 1200 | 560 | 500 | 500 | ug/Kg |
| BH78384 | $DP8270_TCL | Benzo(b)fluoranthene | NY / 375-6.8 Semivolatiles / Residential Restricted | 2300 | 560 | 1000 | 1000 | ug/Kg |
| BH78384 | $DP8270_TCL | Benzo(a)pyrene | NY / 375-6.8 Semivolatiles / Residential Restricted | 2100 | 320 | 1000 | 1000 | ug/Kg |
| BH78384 | $DP8270_TCL | Benz(a)anthracene | NY / 375-6.8 Semivolatiles / Residential Restricted | 1400 | 560 | 1000 | 1000 | ug/Kg |
| BH78384 | $DP8270_TCL | Benzo(a)pyrene | NY / 375-6.8 Semivolatiles / Unrestricted Use Soil | 2100 | 320 | 1000 | 1000 | ug/Kg |
| BH78384 | $DP8270_TCL | Benzo(k)fluoranthene | NY / 375-6.8 Semivolatiles / Unrestricted Use Soil | 840 | 560 | 800 | 800 | ug/Kg |
| BH78384 | $DP8270_TCL | Benz(a)anthracene | NY / 375-6.8 Semivolatiles / Unrestricted Use Soil | 1400 | 560 | 1000 | 1000 | ug/Kg |
| BH78384 | $DP8270_TCL | Chrysene | NY / 375-6.8 Semivolatiles / Unrestricted Use Soil | 1500 | 560 | 1000 | 1000 | ug/Kg |
| BH78384 | $DP8270_TCL | 2-Methylphenol (o-cresol) | NY / 375-6.8 Semivolatiles / Unrestricted Use Soil | ND | 560 | 330 | 330 | ug/Kg |
| BH78384 | $DP8270_TCL | Indeno(1,2,3-cd)pyrene | NY / 375-6.8 Semivolatiles / Unrestricted Use Soil | 1200 | 560 | 500 | 500 | ug/Kg |
| BH78384 | $DP8270_TCL | Phenol | NY / 375-6.8 Semivolatiles / Unrestricted Use Soil | ND | 560 | 330 | 330 | ug/Kg |
| BH78384 | $DP8270_TCL | Benzo(b)fluoranthene | NY / 375-6.8 Semivolatiles / Unrestricted Use Soil | 2300 | 560 | 1000 | 1000 | ug/Kg |
| BH78385 | $DP8260_TCLS | Acetone | NY / 375-6.8 Volatiles / Unrestricted Use Soil | 62 | 51 | 50 | 50 | ug/Kg |
| BH78385 | CR-SM | Chromium | NY / 375-6.8 Metals / Unrestricted Use Soil | 37.8 | 0.37 | 30 | | mg/Kg |
| BH78385 | CU-SM | Copper | NY / 375-6.8 Metals / Unrestricted Use Soil | 107 | 0.37 | 50 | 50 | mg/kg |
| BH78385 | PB-SMDP | Lead | NY / 375-6.8 Metals / Unrestricted Use Soil | 95.8 | 0.7 | 63 | 63 | mg/Kg |
| BH78385 | ZN-SMDP | Zinc | NY / 375-6.8 Metals / Unrestricted Use Soil | 168 | 7.3 | 109 | 109 | mg/Kg |
| BH78386 | $DP8270_TCL | Pentachlorophenol | NY / 375-6.8 Semivolatiles / Residential | ND | 2600 | 2400 | 2400 | ug/Kg |
| BH78386 | $DP8270_TCL | Benzo(k)fluoranthene | NY / 375-6.8 Semivolatiles / Residential | 1600 | 2600 | 1000 | 1000 | ug/Kg |
| BH78386 | $DP8270_TCL | Chrysene | NY / 375-6.8 Semivolatiles / Residential | 2900 | 2600 | 1000 | 1000 | ug/Kg |
| BH78386 | $DP8270_TCL | Benz(a)anthracene | NY / 375-6.8 Semivolatiles / Residential | 2800 | 2600 | 1000 | 1000 | ug/Kg |
| BH78386 | $DP8270_TCL | Benzo(b)fluoranthene | NY / 375-6.8 Semivolatiles / Residential | 4000 | 2600 | 1000 | 1000 | ug/Kg |
| BH78386 | $DP8270_TCL | Benzo(a)pyrene | NY / 375-6.8 Semivolatiles / Residential | 3400 | 1500 | 1000 | 1000 | ug/Kg |
| BH78386 | $DP8270_TCL | Dibenz(a,h)anthracene | NY / 375-6.8 Semivolatiles / Residential | ND | 1500 | 330 | 330 | ug/Kg |
| BH78386 | $DP8270_TCL | Indeno(1,2,3-cd)pyrene | NY / 375-6.8 Semivolatiles / Residential | 2100 | 2600 | 500 | 500 | ug/Kg |
| BH78386 | $DP8270_TCL | Benzo(b)fluoranthene | NY / 375-6.8 Semivolatiles / Residential Restricted | 4000 | 2600 | 1000 | 1000 | ug/Kg |
| BH78386 | $DP8270_TCL | Dibenz(a,h)anthracene | NY / 375-6.8 Semivolatiles / Residential Restricted | ND | 1500 | 330 | 330 | ug/Kg |
| BH78386 | $DP8270_TCL | Benzo(a)pyrene | NY / 375-6.8 Semivolatiles / Residential Restricted | 3400 | 1500 | 1000 | 1000 | ug/Kg |
| BH78386 | $DP8270_TCL | Benz(a)anthracene | NY / 375-6.8 Semivolatiles / Residential Restricted | 2800 | 2600 | 1000 | 1000 | ug/Kg |
| BH78386 | $DP8270_TCL | Indeno(1,2,3-cd)pyrene | NY / 375-6.8 Semivolatiles / Residential Restricted | 2100 | 2600 | 500 | 500 | ug/Kg |
| BH78386 | $DP8270_TCL | Benzo(a)pyrene | NY / 375-6.8 Semivolatiles / Unrestricted Use Soil | 3400 | 1500 | 1000 | 1000 | ug/Kg |
| BH78386 | $DP8270_TCL | Benz(a)anthracene | NY / 375-6.8 Semivolatiles / Unrestricted Use Soil | 2800 | 2600 | 1000 | 1000 | ug/Kg |
| BH78386 | $DP8270_TCL | 2-Methylphenol (o-cresol) | NY / 375-6.8 Semivolatiles / Unrestricted Use Soil | ND | 2600 | 330 | 330 | ug/Kg |
| BH78386 | $DP8270_TCL | Chrysene | NY / 375-6.8 Semivolatiles / Unrestricted Use Soil | 2900 | 2600 | 1000 | 1000 | ug/Kg |

# Sample Criteria Exceedences Report

## GBH78384 - HESNY-TUCK



Criteria: NY: 375, 375RRS, 375RS

State: NY

| SampNo | Acode | Phoenix Analyte | Criteria | Result | RL | Criteria | RL Criteria | Analysis Units |
|---|---|---|---|---|---|---|---|---|
| BH78386 | $DP8270_TCL | Dibenz(a,h)anthracene | NY / 375-6.8 Semivolatiles / Unrestricted Use Soil | ND | 1500 | 330 | 330 | ug/Kg |
| BH78386 | $DP8270_TCL | Indeno(1,2,3-cd)pyrene | NY / 375-6.8 Semivolatiles / Unrestricted Use Soil | 2100 | 2600 | 500 | 500 | ug/Kg |
| BH78386 | $DP8270_TCL | Pentachlorophenol | NY / 375-6.8 Semivolatiles / Unrestricted Use Soil | ND | 2600 | 800 | 800 | ug/Kg |
| BH78386 | $DP8270_TCL | Phenol | NY / 375-6.8 Semivolatiles / Unrestricted Use Soil | ND | 2600 | 330 | 330 | ug/Kg |
| BH78386 | $DP8270_TCL | Benzo(b)fluoranthene | NY / 375-6.8 Semivolatiles / Unrestricted Use Soil | 4000 | 2600 | 1000 | 1000 | ug/Kg |
| BH78386 | $DP8270_TCL | Benzo(k)fluoranthene | NY / 375-6.8 Semivolatiles / Unrestricted Use Soil | 1600 | 2600 | 800 | 800 | ug/Kg |
| BH78386 | CU-SM | Copper | NY / 375-6.8 Metals / Unrestricted Use Soil | 72.0 | 0.39 | 50 | 50 | mg/kg |
| BH78387 | $DP8270_TCL | Benz(a)anthracene | NY / 375-6.8 Semivolatiles / Residential | 3700 | 2700 | 1000 | 1000 | ug/Kg |
| BH78387 | $DP8270_TCL | Benzo(k)fluoranthene | NY / 375-6.8 Semivolatiles / Residential | ND | 2700 | 1000 | 1000 | ug/Kg |
| BH78387 | $DP8270_TCL | Chrysene | NY / 375-6.8 Semivolatiles / Residential | 3300 | 2700 | 1000 | 1000 | ug/Kg |
| BH78387 | $DP8270_TCL | Dibenz(a,h)anthracene | NY / 375-6.8 Semivolatiles / Residential | ND | 1600 | 330 | 330 | ug/Kg |
| BH78387 | $DP8270_TCL | Benzo(a)pyrene | NY / 375-6.8 Semivolatiles / Residential | 3000 | 1600 | 1000 | 1000 | ug/Kg |
| BH78387 | $DP8270_TCL | Indeno(1,2,3-cd)pyrene | NY / 375-6.8 Semivolatiles / Residential | ND | 2700 | 500 | 500 | ug/Kg |
| BH78387 | $DP8270_TCL | Benzo(b)fluoranthene | NY / 375-6.8 Semivolatiles / Residential | 3900 | 2700 | 1000 | 1000 | ug/Kg |
| BH78387 | $DP8270_TCL | Pentachlorophenol | NY / 375-6.8 Semivolatiles / Residential | ND | 2700 | 2400 | 2400 | ug/Kg |
| BH78387 | $DP8270_TCL | Dibenz(a,h)anthracene | NY / 375-6.8 Semivolatiles / Residential Restricted | ND | 1600 | 330 | 330 | ug/Kg |
| BH78387 | $DP8270_TCL | Indeno(1,2,3-cd)pyrene | NY / 375-6.8 Semivolatiles / Residential Restricted | ND | 2700 | 500 | 500 | ug/Kg |
| BH78387 | $DP8270_TCL | Benzo(b)fluoranthene | NY / 375-6.8 Semivolatiles / Residential Restricted | 3900 | 2700 | 1000 | 1000 | ug/Kg |
| BH78387 | $DP8270_TCL | Benzo(a)pyrene | NY / 375-6.8 Semivolatiles / Residential Restricted | 3000 | 1600 | 1000 | 1000 | ug/Kg |
| BH78387 | $DP8270_TCL | Benz(a)anthracene | NY / 375-6.8 Semivolatiles / Residential Restricted | 3700 | 2700 | 1000 | 1000 | ug/Kg |
| BH78387 | $DP8270_TCL | Benzo(k)fluoranthene | NY / 375-6.8 Semivolatiles / Unrestricted Use Soil | ND | 2700 | 800 | 800 | ug/Kg |
| BH78387 | $DP8270_TCL | Benzo(a)pyrene | NY / 375-6.8 Semivolatiles / Unrestricted Use Soil | 3000 | 1600 | 1000 | 1000 | ug/Kg |
| BH78387 | $DP8270_TCL | Chrysene | NY / 375-6.8 Semivolatiles / Unrestricted Use Soil | 3300 | 2700 | 1000 | 1000 | ug/Kg |
| BH78387 | $DP8270_TCL | Benz(a)anthracene | NY / 375-6.8 Semivolatiles / Unrestricted Use Soil | 3700 | 2700 | 1000 | 1000 | ug/Kg |
| BH78387 | $DP8270_TCL | Dibenz(a,h)anthracene | NY / 375-6.8 Semivolatiles / Unrestricted Use Soil | ND | 1600 | 330 | 330 | ug/Kg |
| BH78387 | $DP8270_TCL | 2-Methylphenol (o-cresol) | NY / 375-6.8 Semivolatiles / Unrestricted Use Soil | ND | 2700 | 330 | 330 | ug/Kg |
| BH78387 | $DP8270_TCL | Indeno(1,2,3-cd)pyrene | NY / 375-6.8 Semivolatiles / Unrestricted Use Soil | ND | 2700 | 500 | 500 | ug/Kg |
| BH78387 | $DP8270_TCL | Pentachlorophenol | NY / 375-6.8 Semivolatiles / Unrestricted Use Soil | ND | 2700 | 800 | 800 | ug/Kg |
| BH78387 | $DP8270_TCL | Phenol | NY / 375-6.8 Semivolatiles / Unrestricted Use Soil | ND | 2700 | 330 | 330 | ug/Kg |
| BH78387 | $DP8270_TCL | Benzo(b)fluoranthene | NY / 375-6.8 Semivolatiles / Unrestricted Use Soil | 3900 | 2700 | 1000 | 1000 | ug/Kg |
| BH78388 | ZN-SMDP | Zinc | NY / 375-6.8 Metals / Unrestricted Use Soil | 229 | 7.7 | 109 | 109 | mg/Kg |
| BH78389 | ZN-SMDP | Zinc | NY / 375-6.8 Metals / Unrestricted Use Soil | 158 | 6.7 | 109 | 109 | mg/Kg |

Phoenix Laboratories does not assume responsibility for the data contained in this report. It is provided as an additional tool to identify requested criteria exceedences. All efforts are made to ensure the accuracy of the data (obtained from appropriate agencies). A lack of exceedence information does not necessarily suggest conformance to the criteria. It is ultimately the site professional's responsibility to determine appropriate compliance.

**Environmental Laboratories, Inc.**
**587 East Middle Turnpike, P.O.Box 370, Manchester, CT 06045**
**Tel. (860) 645-1102 Fax (860) 645-0823**

# NY Temperature Narration

**May 01, 2015**

**SDG I.D.: GBH78384**

The samples in this delivery group were received at 4°C.
(Note acceptance criteria is above freezing up to 6°C)

**PHOENIX**
*Environmental Laboratories, Inc.*

# NY/NJ CHAIN OF CUSTODY RECORD

587 East Middle Turnpike, P.O. Box 370, Manchester, CT 06040
Email: info@phoenixlabs.com Fax (860) 645-0823
**Client Services (860) 645-8726**

Temp 4 Pg 1 of 1

**Data Delivery:**
☐ Fax #:
☒ Email: info@hesny.com

Customer:
Address: HYDROENVIRONMENTAL SOLUTIONS
ONE DEANS BRIDGE ROAD
SOMERS, NEW YORK 10589

Project: 109 Marbledale Rd, Tuckahoe, NY
Report to: Tim Carr
Invoice to:

Project P.O:
Phone #: 914-276-2560
Fax #: 914-276-2664

**Client Sample - Information - Identification**

Sampler's Signature: [signature] Date: 2/27/15

**Matrix Code:**
DW=drinking water WW=wastewater S=soil/solid O=oil
GW=groundwater SL=sludge A=air X=other

Analysis Request

| Phoenix Sample # | Customer Sample Identification | Sample Matrix | Date Sampled | Time Sampled | TCL VOC | TCL SVOC | TCL PCB | Tal Metals | Cyanide | Arsenic | Soil VOA ☒ Methanol [ ] S. Bisulfate ☒ H2O | GL Soil container ( 8 ) oz | GL Soil container ( ) oz | 40 ml VOA Vial [ ] As is [ ] HCl | GL Amber 1000ml [ ] As is [ ] H2SO4 | PL As is [ ] 1250ml [ ] 500ml [ ] 1000ml | PL H2SO4 [ ] 250ml [ ] 500ml | PL HNO3 250ml | PL NaOH 250ml | Bacteria Bottle |
|---|---|---|---|---|---|---|---|---|---|---|---|---|---|---|---|---|---|---|---|---|
| 78384 | TB-12 (4-6) | S | 2/26/15 | | ↓ | ↓ | ↓ | ↓ | ↓ | ↓ | | 3 | 2 | | | | | | | |
| 78385 | TB-12 (28-30) | ↓ | ↓ | | ↓ | ↓ | ↓ | ↓ | ↓ | ↓ | | ↓ | ↓ | | | | | | | |
| 78386 | TB-11 (4-6) | ↓ | 2/27/15 | | ↓ | ↓ | ↓ | ↓ | ↓ | ↓ | | ↓ | ↓ | | | | | | | |
| 78387 | TB-11 (21-23) | ↓ | ↓ | | ↓ | ↓ | ↓ | ↓ | ↓ | ↓ | | ↓ | ↓ | | | | | | | |
| 78388 | TB-8 (2-4) | ↓ | ↓ | | ↓ | ↓ | ↓ | ↓ | ↓ | ↓ | | ↓ | ↓ | | | | | | | |
| 78389 | TB-8 (20-22) | ↓ | ↓ | | ↓ | ↓ | ↓ | ↓ | ↓ | ↓ | | ↓ | ↓ | | | | | | | |

| Relinquished by: | Accepted by: | Date: | Time: |
|---|---|---|---|
| [signature] | [signature] | 3-2-15 | 12:10 |
| [signature] | Unknown Del | 3/2/15 | 15:48 |

**Comments, Special Requirements or Regulations:**

**Turnaround:**
☐ 1 Day*
☐ 2 Days*
☐ 3 Days*
☒ Standard
☐ Other
* SURCHARGE APPLIES

**NJ**
☐ Res. Criteria
☐ Non-Res. Criteria
☐ Impact to GW Soil Cleanup Criteria
☐ GW Criteria

**NY**
☐ TAGM 4046 GW
☐ TAGM 4046 SOIL
☒ NY375 Unrestricted Soil
☒ NY375 Residential Soil
☒ NY375 Restricted Non-Residential Soil

**Data Format**
☐ Phoenix Std Report
☐ Excel
☒ PDF
☐ GIS/Key
☒ EQuIS
☐ NJ Hazsite EDD
☐ NY EZ EDD (ASP)
☐ Other

**Data Package**
☐ NJ Reduced Deliv. *
☐ NY Enhanced (ASP B) *
☐ Other

**State where samples were collected:** NY

## Sarah - Phoenixlabs

**From:** Rachel Griffiths [rgriffiths@hes-nj.com]
**Sent:** Monday, April 06, 2015 4:06 PM
**To:** Sarah - Phoenixlabs; rowanenv1@aol.com
**Cc:** Tim Carr; Alyssa N. Epstein
**Subject:** RE: Marbledale Road, Tuckahoe - ASP-B Data Package

Yes from here on out, that'll be much easier... it was sort of a retroactive realization that we had forgotten!

Our validator has requested a hard copy, though we can work that out in-house if you don't do it.

Thanks for your help, as usual!!

-Rachel

Rachel E. Griffiths
Geologist/Hydrogeologist

HydroEnvironmental Solutions, Inc.
One Deans Bridge Road
Somers, New York 10589
Phone: (914) 276-2560
Fax: (914) 276-2664
Cell: (914) 512-0779
www.hesny.com

-----Original Message-----
From: Sarah - Phoenixlabs [mailto:sarah@phoenixlabs.com]
Sent: Monday, April 06, 2015 3:58 PM
To: Rachel Griffiths; rowanenv1@aol.com
Cc: Tim Carr; Alyssa N. Epstein
Subject: RE: Marbledale Road, Tuckahoe - ASP-B Data Package

Rachel,

Should be ok there may be a charge to add these on now, I will let you know.
Going forward please mark on the chain that you need ASP B (we don't charge for these if added at time of sample receipt) it is in the lower right side of the chain even if you don't end up using them as full packages it will save a tremendous amount of time for our Deliverables Team to do upfront.
We will deliver the final package to you and you can add your Validator to this account so they can retrieve all excels and reports they need. Please give me their information once you have it. We do not send out a hard copy normally.

I will let you know the time frame of when you can expect the ASP Bs once I know.

Thanks and will let you know if anything comes up and we can't .
Sarah

-----Original Message-----
From: Rachel Griffiths [mailto:rgriffiths@hes-nj.com]

Sent: Monday, April 06, 2015 3:40 PM
To: Sarah - Phoenixlabs
Cc: Tim Carr; Alyssa N. Epstein
Subject: Marbledale Road, Tuckahoe - ASP-B Data Package

Hi Sarah!!

We will be needing data deliverables that meet the criteria for ASP-B data package for the following delivery groups (and select future data for this
project):

GBH82998
GBH79483
GBH78390
GBH78384

Do you need anything from me to go ahead and get started with this?

Ultimately, HES will receive the electronic copy and a data validator will receive the hard copy.

Give me a call if you'd like to discuss: 914-512-0779

Best,
Rachel

Rachel E. Griffiths
Geologist/Hydrogeologist

HydroEnvironmental Solutions, Inc.
One Deans Bridge Road
Somers, New York 10589
Phone: (914) 276-2560
Fax: (914) 276-2664
Cell: (914) 512-0779
www.hesny.com

PHOENIX
Environmental Laboratories, Inc.

Monday, March 09, 2015

Attn: Mr. Tim Carr
HydroEnvironmental Solutions, Inc.
One Deans Bridge Rd
Somers NY 10589

Project ID: 109 MARBLEDALE RD TUCKAHOE NY
Sample ID#s: BH78392 - BH78393

This laboratory is in compliance with the NELAC requirements of procedures used except where indicated.

This report contains results for the parameters tested, under the sampling conditions described on the Chain Of Custody, as received by the laboratory.

All soils, solids and sludges are reported on a dry weight basis unless otherwise noted in the sample comments.

A scanned version of the COC form accompanies the analytical report and is an exact duplicate of the original.

If you have any questions concerning this testing, please do not hesitate to contact Phoenix Client Services at ext. 200.

Sincerely yours,

Phyllis Shiller

Phyllis Shiller
Laboratory Director

NELAC - #NY11301
CT Lab Registration #PH-0618
MA Lab Registration #MA-CT-007
ME Lab Registration #CT-007
NH Lab Registration #213693-A,B
NJ Lab Registration #CT-003
NY Lab Registration #11301
PA Lab Registration #68-03530
RI Lab Registration #63
VT Lab Registration #VT11301

587 East Middle Turnpike, P.O. Box 370, Manchester, CT 06040
Telephone (860) 645-1102 Fax (860) 645-0823

PHOENIX

Environmental Laboratories, Inc.
587 East Middle Turnpike, P.O.Box 370, Manchester, CT 06045
Tel. (860) 645-1102 Fax (860) 645-0823

ACCREDITED IN ACCORDANCE WITH nelac
NY # 11301

# SDG Comments

March 09, 2015

SDG I.D.: GBH78392

---

Please be advised that the NY 375 soil criteria for chromium are based on hexavalent chromium and trivalent chromium.

BH78392 - The client provided an ENCORE sample. Phoenix prepared sample per method 5035.

BH78393 - The client provided an ENCORE sample. Phoenix prepared sample per method 5035.

PHOENIX

Environmental Laboratories, Inc.
587 East Middle Turnpike, P.O.Box 370, Manchester, CT 06045
Tel. (860) 645-1102 Fax (860) 645-0823

ACCREDITED IN ACCORDANCE WITH nelac
NY # 11301

# Analysis Report

March 09, 2015

FOR: Attn: Mr. Tim Carr
HydroEnvironmental Solutions, Inc.
One Deans Bridge Rd
Somers NY 10589

| Sample Information | | Custody Information | | Date | Time |
|---|---|---|---|---|---|
| Matrix: | SOLID | Collected by: | RG | 02/27/15 | 0:00 |
| Location Code: | HESNY-TUCK | Received by: | SW | 03/02/15 | 15:48 |
| Rush Request: | 72 Hour | Analyzed by: | see "By" below | | |
| P.O.#: | | | | | |

## Laboratory Data

SDG ID: GBH78392
Phoenix ID: BH78392

Project ID: 109 MARBLEDALE RD TUCKAHOE NY
Client ID: TB-11

| Parameter | Result | RL/ PQL | LOD/ MDL | Units | Date/Time | By | Reference | |
|---|---|---|---|---|---|---|---|---|
| Silver | < 0.36 | 0.36 | | mg/Kg | 03/03/15 | EK | SW6010C | |
| Aluminum | 3220 | 54 | | mg/Kg | 03/03/15 | EK | SW6010C | |
| Arsenic | 2.6 | 0.7 | | mg/Kg | 03/03/15 | EK | SW6010C | |
| Barium | 29.0 | 0.36 | | mg/Kg | 03/03/15 | EK | SW6010C | |
| Beryllium | < 0.29 | 0.29 | | mg/Kg | 03/03/15 | EK | SW6010C | |
| Calcium | 72400 | 54 | | mg/Kg | 03/03/15 | EK | SW6010C | |
| Cadmium | < 0.36 | 0.36 | | mg/Kg | 03/03/15 | EK | SW6010C | |
| Cobalt | 3.51 | 0.36 | | mg/Kg | 03/03/15 | EK | SW6010C | |
| Chromium | 10.5 | 0.36 | | mg/Kg | 03/03/15 | EK | SW6010C | |
| Copper | 24.5 | 0.36 | | mg/kg | 03/03/15 | EK | SW6010C | |
| Iron | 8430 | 5.4 | | mg/Kg | 03/03/15 | EK | SW6010C | |
| Mercury | < 0.03 | 0.03 | | mg/Kg | 03/03/15 | MA | SW7471B | |
| Potassium | 1140 | 5.4 | | mg/Kg | 03/03/15 | EK | SW6010C | |
| Magnesium | 19000 | 54 | | mg/Kg | 03/03/15 | EK | SW6010C | |
| Manganese | 140 | 0.36 | | mg/Kg | 03/03/15 | EK | SW6010C | |
| Sodium | 230 | 5.4 | | mg/Kg | 03/03/15 | EK | SW6010C | |
| Nickel | 9.49 | 0.36 | | mg/Kg | 03/03/15 | EK | SW6010C | |
| Lead | 14.8 | 0.36 | | mg/Kg | 03/03/15 | EK | SW6010C | |
| Antimony | < 3.6 | 3.6 | | mg/Kg | 03/03/15 | EK | SW6010C | |
| Selenium | < 1.4 | 1.4 | | mg/Kg | 03/03/15 | EK | SW6010C | |
| TCLP Silver | < 0.10 | 0.10 | | mg/L | 03/03/15 | EK | SW6010C | |
| TCLP Arsenic | < 0.10 | 0.10 | | mg/L | 03/03/15 | EK | SW6010C | |
| TCLP Barium | 0.27 | 0.10 | | mg/L | 03/03/15 | EK | SW6010C | B |
| TCLP Cadmium | < 0.050 | 0.050 | | mg/L | 03/03/15 | EK | SW6010C | |
| TCLP Chromium | < 0.10 | 0.10 | | mg/L | 03/03/15 | EK | SW6010C | |
| TCLP Copper | < 0.10 | 0.10 | | mg/L | 03/03/15 | EK | SW6010C | |
| TCLP Mercury | < 0.0002 | 0.0002 | | mg/L | 03/03/15 | MA | SW7470A | |
| TCLP Nickel | < 0.10 | 0.10 | | mg/L | 03/03/15 | EK | SW6010C | |

Project ID: 109 MARBLEDALE RD TUCKAHOE NY
Client ID: TB-11

Phoenix I.D.: BH78392

| Parameter | Result | RL/ PQL | LOD/ MDL | Units | Date/Time | By | Reference | |
|---|---|---|---|---|---|---|---|---|
| TCLP Lead | < 0.10 | 0.10 | | mg/L | 03/03/15 | EK | SW6010C | |
| TCLP Selenium | < 0.10 | 0.10 | | mg/L | 03/03/15 | EK | SW6010C | |
| TCLP Zinc | < 0.10 | 0.10 | | mg/L | 03/03/15 | EK | SW6010C | |
| Thallium | < 3.3 | 3.3 | | mg/Kg | 03/03/15 | EK | SW6010C | |
| TCLP Metals Digestion | Completed | | | | 03/03/15 | I/I | SW3005A | |
| Vanadium | 34.8 | 0.36 | | mg/Kg | 03/03/15 | EK | SW6010C | |
| Zinc | 27.4 | 0.36 | | mg/Kg | 03/03/15 | EK | SW6010C | |
| Percent Solid | 91 | | | % | 03/02/15 | i | SW846-%Solid | |
| Corrosivity | Negative | | | Pos/Neg | 03/02/15 | DH/KDB | SW846-Corr | 1 |
| Flash Point | >200 | 200 | | Degree F | 03/03/15 | Y | SW1010A | |
| Chromium, Hexavalent | < 0.46 | 0.46 | | mg/Kg | 03/05/15 10:14 | KDB | SW3060/SW719 | |
| Ignitability | Passed | 140 | | degree F | 03/03/15 | Y | SW846-Ignit | 1 |
| pH - Soil | 10.88 | 0.10 | | pH Units | 03/02/15 20:15 | DH/KDB | SW9045 | 1 |
| Reactivity Cyanide | < 5.5 | 5.5 | | mg/Kg | 03/03/15 | O/E/B | SW846-React | 1 |
| Reactivity Sulfide | < 20 | 20 | | mg/Kg | 03/04/15 | EG | SW-7.3 | 1 |
| Reactivity | Negative | | | Pos/Neg | 03/04/15 | EG | SW846-React | 1 |
| Redox Potential | 110 | 1.0 | | mV | 03/02/15 | DH/KDB | SM2580B-09 | 1 |
| Soil Extraction for PCB | Completed | | | | 03/02/15 | CC | SW3545A | |
| Soil Extraction for Pesticide | Completed | | | | 03/02/15 | CC | SW3545A | |
| Soil Extraction for SVOA | Completed | | | | 03/02/15 | CJ/VH | SW3545A | |
| Mercury Digestion | Completed | | | | 03/03/15 | I/I | SW7471B | |
| Ext. of Petroleum Hydrocarbons | Completed | | | | 03/02/15 | BC/V | SW3545A | |
| TCLP Digestion Mercury | Completed | | | | 03/03/15 | I/I | SW7470A | |
| TCLP Herbicides Extraction | Completed | | | | 03/03/15 | I/D | SW8150 MOD | |
| TCLP Extraction for Metals | Completed | | | | 03/02/15 | I | SW1311 | |
| TCLP Extraction for Organics | Completed | | | | 03/02/15 | I | SW1311 | |
| TCLP Pesticides Extraction | Completed | | | | 03/03/15 | L | SW3510C | |
| TCLP Semi-Volatile Extraction | Completed | | | | 03/03/15 | L | SW3510C | |
| Total Metals Digest | Completed | | | | 03/02/15 | CB/AG | SW3050B | |

## Polychlorinated Biphenyls

| | | | | | | | |
|---|---|---|---|---|---|---|---|
| PCB-1016 | ND | 72 | | ug/Kg | 03/03/15 | AW | SW8082A |
| PCB-1221 | ND | 72 | | ug/Kg | 03/03/15 | AW | SW8082A |
| PCB-1232 | ND | 72 | | ug/Kg | 03/03/15 | AW | SW8082A |
| PCB-1242 | ND | 72 | | ug/Kg | 03/03/15 | AW | SW8082A |
| PCB-1248 | ND | 72 | | ug/Kg | 03/03/15 | AW | SW8082A |
| PCB-1254 | ND | 72 | | ug/Kg | 03/03/15 | AW | SW8082A |
| PCB-1260 | ND | 72 | | ug/Kg | 03/03/15 | AW | SW8082A |
| PCB-1262 | ND | 72 | | ug/Kg | 03/03/15 | AW | SW8082A |
| PCB-1268 | ND | 72 | | ug/Kg | 03/03/15 | AW | SW8082A |
| **QA/QC Surrogates** | | | | | | | |
| % DCBP | 97 | | | % | 03/03/15 | AW | 30 - 150 % |
| % TCMX | 90 | | | % | 03/03/15 | AW | 30 - 150 % |

## Pesticides - Soil

| | | | | | | | |
|---|---|---|---|---|---|---|---|
| 4,4' -DDD | ND | 21 | | ug/Kg | 03/05/15 | C/P | SW8081B |
| 4,4' -DDE | ND | 21 | | ug/Kg | 03/05/15 | C/P | SW8081B |
| 4,4' -DDT | ND | 21 | | ug/Kg | 03/05/15 | C/P | SW8081B |
| a-BHC | ND | 72 | | ug/Kg | 03/05/15 | C/P | SW8081B |
| a-Chlordane | ND | 36 | | ug/Kg | 03/05/15 | C/P | SW8081B |

Project ID: 109 MARBLEDALE RD TUCKAHOE NY
Client ID: TB-11

Phoenix I.D.: BH78392

| Parameter | Result | RL/ PQL | LOD/ MDL | Units | Date/Time | By | Reference | |
|---|---|---|---|---|---|---|---|---|
| Aldrin | ND | 11 | | ug/Kg | 03/05/15 | C/P | SW8081B | |
| b-BHC | ND | 72 | | ug/Kg | 03/05/15 | C/P | SW8081B | |
| Chlordane | ND | 200 | | ug/Kg | 03/05/15 | C/P | SW8081B | |
| d-BHC | ND | 72 | | ug/Kg | 03/05/15 | C/P | SW8081B | |
| Dieldrin | ND | 36 | | ug/Kg | 03/05/15 | C/P | SW8081B | |
| Endosulfan I | ND | 72 | | ug/Kg | 03/05/15 | C/P | SW8081B | |
| Endosulfan II | ND | 72 | | ug/Kg | 03/05/15 | C/P | SW8081B | |
| Endosulfan sulfate | ND | 72 | | ug/Kg | 03/05/15 | C/P | SW8081B | |
| Endrin | ND | 72 | | ug/Kg | 03/05/15 | C/P | SW8081B | |
| Endrin aldehyde | ND | 72 | | ug/Kg | 03/05/15 | C/P | SW8081B | |
| Endrin ketone | ND | 72 | | ug/Kg | 03/05/15 | C/P | SW8081B | |
| g-BHC | ND | 14 | | ug/Kg | 03/05/15 | C/P | SW8081B | |
| g-Chlordane | ND | 36 | | ug/Kg | 03/05/15 | C/P | SW8081B | |
| Heptachlor | ND | 72 | | ug/Kg | 03/05/15 | C/P | SW8081B | |
| Heptachlor epoxide | ND | 36 | | ug/Kg | 03/05/15 | C/P | SW8081B | |
| Methoxychlor | ND | 360 | | ug/Kg | 03/05/15 | C/P | SW8081B | |
| Toxaphene | ND | 600 | | ug/Kg | 03/05/15 | C/P | SW8081B | |
| **QA/QC Surrogates** | | | | | | | | |
| % DCBP | 91 | | | % | 03/05/15 | C/P | 30 - 150 % | |
| % TCMX | 87 | | | % | 03/05/15 | C/P | 30 - 150 % | |
| **TCLP Herbicides** | | | | | | | | |
| 2,4,5-TP (Silvex) | ND | 4.2 | | ug/L | 03/04/15 | BB | SW8151A | |
| 2,4-D | ND | 4.2 | | ug/L | 03/04/15 | BB | SW8151A | |
| **QA/QC Surrogates** | | | | | | | | |
| % DCAA | 43 | | | % | 03/04/15 | BB | 30 - 150 % | |
| **TCLP Pesticides** | | | | | | | | |
| 4,4' -DDD | ND | 1.0 | | ug/L | 03/04/15 | CE | SW8081B | |
| 4,4' -DDE | ND | 1.0 | | ug/L | 03/04/15 | CE | SW8081B | |
| 4,4' -DDT | ND | 1.0 | | ug/L | 03/04/15 | CE | SW8081B | |
| a-BHC | ND | 0.50 | | ug/L | 03/04/15 | CE | SW8081B | |
| Alachlor | ND | 0.50 | | ug/L | 03/04/15 | CE | SW8081B | 1 |
| Aldrin | ND | 0.50 | | ug/L | 03/04/15 | CE | SW8081B | |
| b-BHC | ND | 0.50 | | ug/L | 03/04/15 | CE | SW8081B | |
| Chlordane | ND | 5.0 | | ug/L | 03/04/15 | CE | SW8081B | |
| d-BHC | ND | 0.50 | | ug/L | 03/04/15 | CE | SW8081B | |
| Dieldrin | ND | 1.0 | | ug/L | 03/04/15 | CE | SW8081B | |
| Endosulfan I | ND | 0.50 | | ug/L | 03/04/15 | CE | SW8081B | |
| Endosulfan II | ND | 1.0 | | ug/L | 03/04/15 | CE | SW8081B | |
| Endosulfan Sulfate | ND | 1.0 | | ug/L | 03/04/15 | CE | SW8081B | |
| Endrin | ND | 1.0 | | ug/L | 03/04/15 | CE | SW8081B | |
| Endrin Aldehyde | ND | 1.0 | | ug/L | 03/04/15 | CE | SW8081B | |
| g-BHC (Lindane) | ND | 0.50 | | ug/L | 03/04/15 | CE | SW8081B | |
| Heptachlor | ND | 0.50 | | ug/L | 03/04/15 | CE | SW8081B | |
| Heptachlor epoxide | ND | 0.50 | | ug/L | 03/04/15 | CE | SW8081B | |
| Methoxychlor | ND | 0.50 | | ug/L | 03/04/15 | CE | SW8081B | |
| Toxaphene | ND | 20 | | ug/L | 03/04/15 | CE | SW8081B | |
| **QA/QC Surrogates** | | | | | | | | |
| %DCBP (Surrogate Rec) | 88 | | | % | 03/04/15 | CE | 30 - 150 % | |

Project ID: 109 MARBLEDALE RD TUCKAHOE NY
Client ID: TB-11

Phoenix I.D.: BH78392

| Parameter | Result | RL/ PQL | LOD/ MDL | Units | Date/Time | By | Reference |
|---|---|---|---|---|---|---|---|
| %TCMX (Surrogate Rec) | 76 | | | % | 03/04/15 | CE | 30 - 150 % |
| **Extractable Petroleum Hydrocarbons** | | | | | | | |
| TPH to C44 | 1300 | 360 | | mg/Kg | 03/04/15 | JRB | SW8015D MOD |
| **QA/QC Surrogates** | | | | | | | |
| % Chlorobenzene (surrogate) | 44 | | | % | 03/04/15 | JRB | 60 - 120 % 3 |
| % Pentacosane (surrogate) | 81 | | | % | 03/04/15 | JRB | 50 - 150 % |
| **Gasoline Range Organics (C6-C10)** | ND | 20 | | mg/Kg | 03/04/15 | JRB | SW8015D GRO |
| **Volatiles (TCL)** | | | | | | | |
| 1,1,1-Trichloroethane | ND | 6.3 | | ug/kg | 03/04/15 | JLI | SW8260C |
| 1,1,2,2-Tetrachloroethane | ND | 6.3 | | ug/kg | 03/04/15 | JLI | SW8260C |
| 1,1,2-Trichloroethane | ND | 6.3 | | ug/kg | 03/04/15 | JLI | SW8260C |
| 1,1-Dichloroethane | ND | 6.3 | | ug/kg | 03/04/15 | JLI | SW8260C |
| 1,1-Dichloroethene | ND | 6.3 | | ug/kg | 03/04/15 | JLI | SW8260C |
| 1,2,3-Trichlorobenzene | ND | 6.3 | | ug/kg | 03/04/15 | JLI | SW8260C |
| 1,2,4-Trichlorobenzene | ND | 6.3 | | ug/kg | 03/04/15 | JLI | SW8260C |
| 1,2-Dibromo-3-chloropropane | ND | 6.3 | | ug/kg | 03/04/15 | JLI | SW8260C |
| 1,2-Dibromoethane | ND | 6.3 | | ug/kg | 03/04/15 | JLI | SW8260C |
| 1,2-Dichlorobenzene | ND | 6.3 | | ug/kg | 03/04/15 | JLI | SW8260C |
| 1,2-Dichloroethane | ND | 6.3 | | ug/kg | 03/04/15 | JLI | SW8260C |
| 1,2-Dichloropropane | ND | 6.3 | | ug/kg | 03/04/15 | JLI | SW8260C |
| 1,3-Dichlorobenzene | ND | 6.3 | | ug/kg | 03/04/15 | JLI | SW8260C |
| 1,4-Dichlorobenzene | ND | 6.3 | | ug/kg | 03/04/15 | JLI | SW8260C |
| 2-Hexanone | ND | 32 | | ug/kg | 03/04/15 | JLI | SW8260C |
| 4-Methyl-2-pentanone | ND | 32 | | ug/kg | 03/04/15 | JLI | SW8260C |
| Acetone | ND | 63 | | ug/kg | 03/04/15 | JLI | SW8260C |
| Benzene | ND | 6.3 | | ug/kg | 03/04/15 | JLI | SW8260C |
| Bromochloromethane | ND | 6.3 | | ug/kg | 03/04/15 | JLI | SW8260C |
| Bromodichloromethane | ND | 6.3 | | ug/kg | 03/04/15 | JLI | SW8260C |
| Bromoform | ND | 6.3 | | ug/kg | 03/04/15 | JLI | SW8260C |
| Bromomethane | ND | 6.3 | | ug/kg | 03/04/15 | JLI | SW8260C |
| Carbon Disulfide | ND | 6.3 | | ug/kg | 03/04/15 | JLI | SW8260C |
| Carbon tetrachloride | ND | 6.3 | | ug/kg | 03/04/15 | JLI | SW8260C |
| Chlorobenzene | ND | 6.3 | | ug/kg | 03/04/15 | JLI | SW8260C |
| Chloroethane | ND | 6.3 | | ug/kg | 03/04/15 | JLI | SW8260C |
| Chloroform | ND | 6.3 | | ug/kg | 03/04/15 | JLI | SW8260C |
| Chloromethane | ND | 6.3 | | ug/kg | 03/04/15 | JLI | SW8260C |
| cis-1,2-Dichloroethene | ND | 6.3 | | ug/kg | 03/04/15 | JLI | SW8260C |
| cis-1,3-Dichloropropene | ND | 6.3 | | ug/kg | 03/04/15 | JLI | SW8260C |
| Cyclohexane | ND | 6.3 | | ug/kg | 03/04/15 | JLI | SW8260C |
| Dibromochloromethane | ND | 6.3 | | ug/kg | 03/04/15 | JLI | SW8260C |
| Dichlorodifluoromethane | ND | 6.3 | | ug/kg | 03/04/15 | JLI | SW8260C |
| Ethylbenzene | ND | 6.3 | | ug/kg | 03/04/15 | JLI | SW8260C |
| Isopropylbenzene | ND | 6.3 | | ug/kg | 03/04/15 | JLI | SW8260C |
| m&p-Xylene | ND | 6.3 | | ug/kg | 03/04/15 | JLI | SW8260C |
| Methyl ethyl ketone | ND | 38 | | ug/kg | 03/04/15 | JLI | SW8260C |
| Methyl t-butyl ether (MTBE) | ND | 13 | | ug/kg | 03/04/15 | JLI | SW8260C |
| Methylacetate | ND | 5.1 | | ug/kg | 03/04/15 | JLI | SW8260C |
| Methylcyclohexane | ND | 6.3 | | ug/kg | 03/04/15 | JLI | SW8260C |

Project ID: 109 MARBLEDALE RD TUCKAHOE NY
Client ID: TB-11

Phoenix I.D.: BH78392

| Parameter | Result | RL/ PQL | LOD/ MDL | Units | Date/Time | By | Reference |
|---|---|---|---|---|---|---|---|
| Methylene chloride | ND | 6.3 | | ug/kg | 03/04/15 | JLI | SW8260C |
| o-Xylene | ND | 6.3 | | ug/kg | 03/04/15 | JLI | SW8260C |
| Styrene | ND | 6.3 | | ug/kg | 03/04/15 | JLI | SW8260C |
| Tetrachloroethene | ND | 6.3 | | ug/kg | 03/04/15 | JLI | SW8260C |
| Toluene | ND | 6.3 | | ug/kg | 03/04/15 | JLI | SW8260C |
| Total Xylenes | ND | 6.3 | | ug/kg | 03/04/15 | JLI | SW8260C |
| trans-1,2-Dichloroethene | ND | 6.3 | | ug/kg | 03/04/15 | JLI | SW8260C |
| trans-1,3-Dichloropropene | ND | 6.3 | | ug/kg | 03/04/15 | JLI | SW8260C |
| Trichloroethene | ND | 6.3 | | ug/kg | 03/04/15 | JLI | SW8260C |
| Trichlorofluoromethane | ND | 6.3 | | ug/kg | 03/04/15 | JLI | SW8260C |
| Trichlorotrifluoroethane | ND | 6.3 | | ug/kg | 03/04/15 | JLI | SW8260C |
| Vinyl chloride | ND | 6.3 | | ug/kg | 03/04/15 | JLI | SW8260C |
| **QA/QC Surrogates** | | | | | | | |
| % 1,2-dichlorobenzene-d4 | 99 | | | % | 03/04/15 | JLI | 70 - 130 % |
| % Bromofluorobenzene | 94 | | | % | 03/04/15 | JLI | 70 - 130 % |
| % Dibromofluoromethane | 98 | | | % | 03/04/15 | JLI | 70 - 130 % |
| % Toluene-d8 | 96 | | | % | 03/04/15 | JLI | 70 - 130 % |
| Volatile Library Search Top 10 | Completed | | | | 03/05/15 | JLI | |

## Semivolatiles

| | | | | | | | | |
|---|---|---|---|---|---|---|---|---|
| 1,1-Biphenyl | ND | 2500 | | ug/Kg | 03/04/15 | DD | SW8270D | |
| 1,2,4,5-Tetrachlorobenzene | ND | 2500 | | ug/Kg | 03/04/15 | DD | SW8270D | |
| 2,3,4,6-tetrachlorophenol | ND | 2500 | | ug/Kg | 03/04/15 | DD | SW8270D | |
| 2,4,5-Trichlorophenol | ND | 2500 | | ug/Kg | 03/04/15 | DD | SW8270D | |
| 2,4,6-Trichlorophenol | ND | 2500 | | ug/Kg | 03/04/15 | DD | SW8270D | |
| 2,4-Dichlorophenol | ND | 2500 | | ug/Kg | 03/04/15 | DD | SW8270D | |
| 2,4-Dimethylphenol | ND | 2500 | | ug/Kg | 03/04/15 | DD | SW8270D | |
| 2,4-Dinitrophenol | ND | 5700 | | ug/Kg | 03/04/15 | DD | SW8270D | |
| 2,4-Dinitrotoluene | ND | 2500 | | ug/Kg | 03/04/15 | DD | SW8270D | |
| 2,6-Dinitrotoluene | ND | 2500 | | ug/Kg | 03/04/15 | DD | SW8270D | |
| 2-Chloronaphthalene | ND | 2500 | | ug/Kg | 03/04/15 | DD | SW8270D | |
| 2-Chlorophenol | ND | 2500 | | ug/Kg | 03/04/15 | DD | SW8270D | |
| 2-Methylnaphthalene | ND | 2500 | | ug/Kg | 03/04/15 | DD | SW8270D | |
| 2-Methylphenol (o-cresol) | ND | 2500 | | ug/Kg | 03/04/15 | DD | SW8270D | |
| 2-Nitroaniline | ND | 5700 | | ug/Kg | 03/04/15 | DD | SW8270D | |
| 2-Nitrophenol | ND | 2500 | | ug/Kg | 03/04/15 | DD | SW8270D | |
| 3&4-Methylphenol (m&p-cresol) | ND | 3600 | | ug/Kg | 03/04/15 | DD | SW8270D | 1 |
| 3,3'-Dichlorobenzidine | ND | 4300 | | ug/Kg | 03/04/15 | DD | SW8270D | |
| 3-Nitroaniline | ND | 5700 | | ug/Kg | 03/04/15 | DD | SW8270D | |
| 4,6-Dinitro-2-methylphenol | ND | 10000 | | ug/Kg | 03/04/15 | DD | SW8270D | |
| 4-Bromophenyl phenyl ether | ND | 3600 | | ug/Kg | 03/04/15 | DD | SW8270D | |
| 4-Chloro-3-methylphenol | ND | 2500 | | ug/Kg | 03/04/15 | DD | SW8270D | |
| 4-Chloroaniline | ND | 2500 | | ug/Kg | 03/04/15 | DD | SW8270D | |
| 4-Chlorophenyl phenyl ether | ND | 2500 | | ug/Kg | 03/04/15 | DD | SW8270D | |
| 4-Nitroaniline | ND | 5700 | | ug/Kg | 03/04/15 | DD | SW8270D | |
| 4-Nitrophenol | ND | 10000 | | ug/Kg | 03/04/15 | DD | SW8270D | |
| Acenaphthene | ND | 2500 | | ug/Kg | 03/04/15 | DD | SW8270D | |
| Acenaphthylene | ND | 2500 | | ug/Kg | 03/04/15 | DD | SW8270D | |
| Acetophenone | ND | 2500 | | ug/Kg | 03/04/15 | DD | SW8270D | |

Project ID: 109 MARBLEDALE RD TUCKAHOE NY
Client ID: TB-11

Phoenix I.D.: BH78392

| Parameter | Result | RL/ PQL | LOD/ MDL | Units | Date/Time | By | Reference | |
|---|---|---|---|---|---|---|---|---|
| Anthracene | ND | 2500 | | ug/Kg | 03/04/15 | DD | SW8270D | |
| Atrazine | ND | 2500 | | ug/Kg | 03/04/15 | DD | SW8270D | |
| Benz(a)anthracene | ND | 2500 | | ug/Kg | 03/04/15 | DD | SW8270D | |
| Benzaldehyde | ND | 2500 | | ug/Kg | 03/04/15 | DD | SW8270D | |
| Benzo(a)pyrene | ND | 2500 | | ug/Kg | 03/04/15 | DD | SW8270D | |
| Benzo(b)fluoranthene | 3000 | 2500 | | ug/Kg | 03/04/15 | DD | SW8270D | |
| Benzo(ghi)perylene | ND | 2500 | | ug/Kg | 03/04/15 | DD | SW8270D | |
| Benzo(k)fluoranthene | ND | 2500 | | ug/Kg | 03/04/15 | DD | SW8270D | |
| Benzyl butyl phthalate | ND | 2500 | | ug/Kg | 03/04/15 | DD | SW8270D | |
| Bis(2-chloroethoxy)methane | ND | 2500 | | ug/Kg | 03/04/15 | DD | SW8270D | |
| Bis(2-chloroethyl)ether | ND | 3600 | | ug/Kg | 03/04/15 | DD | SW8270D | |
| Bis(2-chloroisopropyl)ether | ND | 2500 | | ug/Kg | 03/04/15 | DD | SW8270D | 1 |
| Bis(2-ethylhexyl)phthalate | ND | 2500 | | ug/Kg | 03/04/15 | DD | SW8270D | |
| Caprolactam | ND | 2500 | | ug/Kg | 03/04/15 | DD | SW8270D | |
| Carbazole | ND | 10000 | | ug/Kg | 03/04/15 | DD | SW8270D | |
| Chrysene | 2600 | 2500 | | ug/Kg | 03/04/15 | DD | SW8270D | |
| Dibenz(a,h)anthracene | ND | 2500 | | ug/Kg | 03/04/15 | DD | SW8270D | |
| Dibenzofuran | ND | 2500 | | ug/Kg | 03/04/15 | DD | SW8270D | |
| Diethyl phthalate | ND | 2500 | | ug/Kg | 03/04/15 | DD | SW8270D | |
| Dimethylphthalate | ND | 2500 | | ug/Kg | 03/04/15 | DD | SW8270D | |
| Di-n-butylphthalate | ND | 2500 | | ug/Kg | 03/04/15 | DD | SW8270D | |
| Di-n-octylphthalate | ND | 2500 | | ug/Kg | 03/04/15 | DD | SW8270D | |
| Fluoranthene | 4600 | 2500 | | ug/Kg | 03/04/15 | DD | SW8270D | |
| Fluorene | ND | 2500 | | ug/Kg | 03/04/15 | DD | SW8270D | |
| Hexachlorobenzene | ND | 2500 | | ug/Kg | 03/04/15 | DD | SW8270D | |
| Hexachlorobutadiene | ND | 2500 | | ug/Kg | 03/04/15 | DD | SW8270D | |
| Hexachlorocyclopentadiene | ND | 2500 | | ug/Kg | 03/04/15 | DD | SW8270D | |
| Hexachloroethane | ND | 2500 | | ug/Kg | 03/04/15 | DD | SW8270D | |
| Indeno(1,2,3-cd)pyrene | ND | 2500 | | ug/Kg | 03/04/15 | DD | SW8270D | |
| Isophorone | ND | 2500 | | ug/Kg | 03/04/15 | DD | SW8270D | |
| Naphthalene | ND | 2500 | | ug/Kg | 03/04/15 | DD | SW8270D | |
| Nitrobenzene | ND | 2500 | | ug/Kg | 03/04/15 | DD | SW8270D | |
| N-Nitrosodimethylamine | ND | 3600 | | ug/Kg | 03/04/15 | DD | SW8270D | |
| N-Nitrosodi-n-propylamine | ND | 2500 | | ug/Kg | 03/04/15 | DD | SW8270D | |
| N-Nitrosodiphenylamine | ND | 3600 | | ug/Kg | 03/04/15 | DD | SW8270D | |
| Pentachlorophenol | ND | 3600 | | ug/Kg | 03/04/15 | DD | SW8270D | |
| Phenanthrene | 4400 | 2500 | | ug/Kg | 03/04/15 | DD | SW8270D | |
| Phenol | ND | 2500 | | ug/Kg | 03/04/15 | DD | SW8270D | |
| Pyrene | 3700 | 2500 | | ug/Kg | 03/04/15 | DD | SW8270D | |
| **QA/QC Surrogates** | | | | | | | | |
| % 2,4,6-Tribromophenol | 76 | | | % | 03/04/15 | DD | 30 - 130 % | |
| % 2-Fluorobiphenyl | 83 | | | % | 03/04/15 | DD | 30 - 130 % | |
| % 2-Fluorophenol | 70 | | | % | 03/04/15 | DD | 30 - 130 % | |
| % Nitrobenzene-d5 | 87 | | | % | 03/04/15 | DD | 30 - 130 % | |
| % Phenol-d5 | 84 | | | % | 03/04/15 | DD | 30 - 130 % | |
| % Terphenyl-d14 | 75 | | | % | 03/04/15 | DD | 30 - 130 % | |

## TCLP Acid/Base-Neutral

| | | | | | | | |
|---|---|---|---|---|---|---|---|
| 1,4-Dichlorobenzene | ND | 83 | | ug/L | 03/04/15 | DD | SW8270D |
| 2,4,5-Trichlorophenol | ND | 83 | | ug/L | 03/04/15 | DD | SW8270D |

Project ID: 109 MARBLEDALE RD TUCKAHOE NY
Client ID: TB-11

Phoenix I.D.: BH78392

| Parameter | Result | RL/ PQL | LOD/ MDL | Units | Date/Time | By | Reference |
|---|---|---|---|---|---|---|---|
| 2,4,6-Trichlorophenol | ND | 83 | | ug/L | 03/04/15 | DD | SW8270D |
| 2,4-Dinitrotoluene | ND | 83 | | ug/L | 03/04/15 | DD | SW8270D |
| 2-Methylphenol (o-cresol) | ND | 83 | | ug/L | 03/04/15 | DD | SW8270D |
| 3&4-Methylphenol (m&p-Cresol) | ND | 83 | | ug/L | 03/04/15 | DD | SW8270D |
| Hexachlorobenzene | ND | 83 | | ug/L | 03/04/15 | DD | SW8270D |
| Hexachlorobutadiene | ND | 83 | | ug/L | 03/04/15 | DD | SW8270D |
| Hexachloroethane | ND | 83 | | ug/L | 03/04/15 | DD | SW8270D |
| Nitrobenzene | ND | 83 | | ug/L | 03/04/15 | DD | SW8270D |
| Pentachlorophenol | ND | 83 | | ug/L | 03/04/15 | DD | SW8270D |
| Pyridine | ND | 83 | | ug/L | 03/04/15 | DD | SW8270D |
| **QA/QC Surrogates** | | | | | | | |
| % 2,4,6-Tribromophenol | 84 | | | % | 03/04/15 | DD | 15 - 110 % |
| % 2-Fluorobiphenyl | 61 | | | % | 03/04/15 | DD | 30 - 130 % |
| % 2-Fluorophenol | 49 | | | % | 03/04/15 | DD | 15 - 110 % |
| % Nitrobenzene-d5 | 66 | | | % | 03/04/15 | DD | 30 - 130 % |
| % Phenol-d5 | 42 | | | % | 03/04/15 | DD | 15 - 110 % |
| % Terphenyl-d14 | 64 | | | % | 03/04/15 | DD | 30 - 130 % |
| SVOA Library Search Top 15 | Completed | | | | 03/05/15 | DD | |

Project ID: 109 MARBLEDALE RD TUCKAHOE NY
Client ID: TB-11

Phoenix I.D.: BH78392

| Parameter | Result | RL/ PQL | LOD/ MDL | Units | Date/Time | By | Reference |
|---|---|---|---|---|---|---|---|

1 = This parameter is not certified by NY NELAC for this matrix. NY NELAC does not offer certification for all parameters at this time.
3 = This parameter exceeds laboratory specified limits.
B = Present in blank, no bias suspected.

**RL/PQL=Reporting/Practical Quantitation Level (Equivalent to NELAC LOQ, Limit of Quanitation) ND=Not Detected**
**BRL=Below Reporting Level LOD=Limit of Detection MDL=Method Detection Limit**

## Comments:

Corrosivity is based solely on the pH analysis performed above.

Please be advised that the NY 375 soil criteria for chromium are based on hexavalent chromium and trivalent chromium.

Ignitability is based solely on the results of the closed cup flashpoint analysis performed above. Passed is >140 degree F.

The regulatory hold time for pH is immediately. This pH was performed in the laboratory and may be considered outside of hold-time.

The reactivity, reported above, is based only on the EPA Interim Guidance for Reactive Cyanide and Reactive Sulfide. This method is no longer listed in the current version of SW-846.

Hexavalent Chromium:
This sample is in a reducing state.

Pesticide Comment:
Due to a matrix interference and/or the presence of a large amount of non-target material in the sample, an elevated RL was reported.

All soils, solids and sludges are reported on a dry weight basis unless otherwise noted in the sample comments.

If there are any questions regarding this data, please call Phoenix Client Services at extension 200.
This report must not be reproduced except in full as defined by the attached chain of custody.

**Phyllis Shiller, Laboratory Director**
**March 09, 2015**
**Reviewed and Released by: Bobbi Aloisa, Vice President**

PHOENIX

Environmental Laboratories, Inc.
587 East Middle Turnpike, P.O.Box 370, Manchester, CT 06045
Tel. (860) 645-1102 Fax (860) 645-0823

ACCREDITED IN ACCORDANCE WITH nelac NY # 11301

# Analysis Report

March 09, 2015

FOR: Attn: Mr. Tim Carr
HydroEnvironmental Solutions, Inc.
One Deans Bridge Rd
Somers NY 10589

| Sample Information | | Custody Information | | Date | Time |
|---|---|---|---|---|---|
| Matrix: | SOLID | Collected by: | RG | 02/26/15 | 0:00 |
| Location Code: | HESNY-TUCK | Received by: | SW | 03/02/15 | 15:48 |
| Rush Request: | 72 Hour | Analyzed by: | see "By" below | | |
| P.O.#: | | | | | |

## Laboratory Data

SDG ID: GBH78392
Phoenix ID: BH78393

Project ID: 109 MARBLEDALE RD TUCKAHOE NY
Client ID: TB-13

| Parameter | Result | RL/ PQL | LOD/ MDL | Units | Date/Time | By | Reference | |
|---|---|---|---|---|---|---|---|---|
| Silver | < 0.37 | 0.37 | | mg/Kg | 03/03/15 | EK | SW6010C | |
| Aluminum | 12500 | 56 | | mg/Kg | 03/03/15 | EK | SW6010C | |
| Arsenic | 0.8 | 0.7 | | mg/Kg | 03/03/15 | EK | SW6010C | |
| Barium | 126 | 0.37 | | mg/Kg | 03/03/15 | EK | SW6010C | |
| Beryllium | 0.43 | 0.30 | | mg/Kg | 03/03/15 | EK | SW6010C | |
| Calcium | 7240 | 5.6 | | mg/Kg | 03/03/15 | EK | SW6010C | |
| Cadmium | < 0.37 | 0.37 | | mg/Kg | 03/03/15 | EK | SW6010C | |
| Cobalt | 14.3 | 0.37 | | mg/Kg | 03/03/15 | EK | SW6010C | |
| Chromium | 33.9 | 0.37 | | mg/Kg | 03/03/15 | EK | SW6010C | |
| Copper | 41.6 | 0.37 | | mg/kg | 03/03/15 | EK | SW6010C | |
| Iron | 24500 | 56 | | mg/Kg | 03/03/15 | EK | SW6010C | |
| Mercury | < 0.03 | 0.03 | | mg/Kg | 03/03/15 | MA | SW7471B | |
| Potassium | 4800 | 56 | | mg/Kg | 03/03/15 | EK | SW6010C | |
| Magnesium | 9110 | 56 | | mg/Kg | 03/03/15 | EK | SW6010C | |
| Manganese | 227 | 3.7 | | mg/Kg | 03/03/15 | EK | SW6010C | |
| Sodium | 249 | 5.6 | | mg/Kg | 03/03/15 | EK | SW6010C | |
| Nickel | 24.8 | 0.37 | | mg/Kg | 03/03/15 | EK | SW6010C | |
| Lead | 75.2 | 0.37 | | mg/Kg | 03/03/15 | EK | SW6010C | |
| Antimony | < 3.7 | 3.7 | | mg/Kg | 03/03/15 | EK | SW6010C | |
| Selenium | < 1.5 | 1.5 | | mg/Kg | 03/03/15 | EK | SW6010C | |
| TCLP Silver | < 0.10 | 0.10 | | mg/L | 03/03/15 | EK | SW6010C | |
| TCLP Arsenic | < 0.10 | 0.10 | | mg/L | 03/03/15 | EK | SW6010C | |
| TCLP Barium | 0.99 | 0.10 | | mg/L | 03/03/15 | EK | SW6010C | B |
| TCLP Cadmium | < 0.050 | 0.050 | | mg/L | 03/03/15 | EK | SW6010C | |
| TCLP Chromium | < 0.10 | 0.10 | | mg/L | 03/03/15 | EK | SW6010C | |
| TCLP Copper | < 0.10 | 0.10 | | mg/L | 03/03/15 | EK | SW6010C | |
| TCLP Mercury | < 0.0002 | 0.0002 | | mg/L | 03/03/15 | MA | SW7470A | |
| TCLP Nickel | < 0.10 | 0.10 | | mg/L | 03/03/15 | EK | SW6010C | |

Project ID: 109 MARBLEDALE RD TUCKAHOE NY
Client ID: TB-13

Phoenix I.D.: BH78393

| Parameter | Result | RL/ PQL | LOD/ MDL | Units | Date/Time | By | Reference | |
|---|---|---|---|---|---|---|---|---|
| TCLP Lead | 1.30 | 0.10 | | mg/L | 03/03/15 | EK | SW6010C | |
| TCLP Selenium | < 0.10 | 0.10 | | mg/L | 03/03/15 | EK | SW6010C | |
| TCLP Zinc | 0.74 | 0.10 | | mg/L | 03/03/15 | EK | SW6010C | |
| Thallium | < 3.4 | 3.4 | | mg/Kg | 03/03/15 | EK | SW6010C | |
| TCLP Metals Digestion | Completed | | | | 03/03/15 | I/I | SW3005A | |
| Vanadium | 50.9 | 0.37 | | mg/Kg | 03/03/15 | EK | SW6010C | |
| Zinc | 81.9 | 0.37 | | mg/Kg | 03/03/15 | EK | SW6010C | |
| Percent Solid | 85 | | | % | 03/02/15 | i | SW846-%Solid | |
| Corrosivity | Negative | | | Pos/Neg | 03/02/15 | DH/KDB | SW846-Corr | 1 |
| Flash Point | >200 | 200 | | Degree F | 03/03/15 | Y | SW1010A | |
| Chromium, Hexavalent | < 0.49 | 0.49 | | mg/Kg | 03/05/15 10:14 | KDB | SW3060/SW719 | |
| Ignitability | Passed | 140 | | degree F | 03/03/15 | Y | SW846-Ignit | 1 |
| pH - Soil | 8.22 | 0.10 | | pH Units | 03/02/15 20:15 | DH/KDB | SW9045 | 1 |
| Reactivity Cyanide | < 5.8 | 5.8 | | mg/Kg | 03/03/15 | O/E/B | SW846-React | 1 |
| Reactivity Sulfide | < 20 | 20 | | mg/Kg | 03/04/15 | EG | SW-7.3 | 1 |
| Reactivity | Negative | | | Pos/Neg | 03/04/15 | EG | SW846-React | 1 |
| Redox Potential | 120 | 1.0 | | mV | 03/02/15 | DH/KDB | SM2580B-09 | 1 |
| Soil Extraction for PCB | Completed | | | | 03/02/15 | CC | SW3545A | |
| Soil Extraction for Pesticide | Completed | | | | 03/02/15 | CC | SW3545A | |
| Soil Extraction for SVOA | Completed | | | | 03/02/15 | CJ/VH | SW3545A | |
| Mercury Digestion | Completed | | | | 03/03/15 | I/I | SW7471B | |
| Ext. of Petroleum Hydrocarbons | Completed | | | | 03/02/15 | BC/V | SW3545A | |
| TCLP Digestion Mercury | Completed | | | | 03/03/15 | I/I | SW7470A | |
| TCLP Herbicides Extraction | Completed | | | | 03/03/15 | I/D | SW8150 MOD | |
| TCLP Extraction for Metals | Completed | | | | 03/02/15 | I | SW1311 | |
| TCLP Extraction for Organics | Completed | | | | 03/02/15 | I | SW1311 | |
| TCLP Pesticides Extraction | Completed | | | | 03/03/15 | L | SW3510C | |
| TCLP Semi-Volatile Extraction | Completed | | | | 03/03/15 | L | SW3510C | |
| TCLP Extraction Volatiles | Completed | | | | 03/02/15 | Y | SW1311 | |
| Total Metals Digest | Completed | | | | 03/02/15 | CB/AG | SW3050B | |

## Polychlorinated Biphenyls

| | | | | | | | |
|---|---|---|---|---|---|---|---|
| PCB-1016 | ND | 76 | | ug/Kg | 03/03/15 | AW | SW8082A |
| PCB-1221 | ND | 76 | | ug/Kg | 03/03/15 | AW | SW8082A |
| PCB-1232 | ND | 76 | | ug/Kg | 03/03/15 | AW | SW8082A |
| PCB-1242 | ND | 76 | | ug/Kg | 03/03/15 | AW | SW8082A |
| PCB-1248 | ND | 76 | | ug/Kg | 03/03/15 | AW | SW8082A |
| PCB-1254 | ND | 76 | | ug/Kg | 03/03/15 | AW | SW8082A |
| PCB-1260 | ND | 76 | | ug/Kg | 03/03/15 | AW | SW8082A |
| PCB-1262 | ND | 76 | | ug/Kg | 03/03/15 | AW | SW8082A |
| PCB-1268 | ND | 76 | | ug/Kg | 03/03/15 | AW | SW8082A |
| **QA/QC Surrogates** | | | | | | | |
| % DCBP | 95 | | | % | 03/03/15 | AW | 30 - 150 % |
| % TCMX | 93 | | | % | 03/03/15 | AW | 30 - 150 % |

## Pesticides - Soil

| | | | | | | | |
|---|---|---|---|---|---|---|---|
| 4,4' -DDD | ND | 2.3 | | ug/Kg | 03/04/15 | CE | SW8081B |
| 4,4' -DDE | ND | 2.3 | | ug/Kg | 03/04/15 | CE | SW8081B |
| 4,4' -DDT | ND | 2.3 | | ug/Kg | 03/04/15 | CE | SW8081B |
| a-BHC | ND | 7.6 | | ug/Kg | 03/04/15 | CE | SW8081B |

Project ID: 109 MARBLEDALE RD TUCKAHOE NY
Client ID: TB-13

Phoenix I.D.: BH78393

| Parameter | Result | RL/ PQL | LOD/ MDL | Units | Date/Time | By | Reference | |
|---|---|---|---|---|---|---|---|---|
| a-Chlordane | ND | 3.8 | | ug/Kg | 03/04/15 | CE | SW8081B | |
| Aldrin | ND | 3.8 | | ug/Kg | 03/04/15 | CE | SW8081B | |
| b-BHC | ND | 7.6 | | ug/Kg | 03/04/15 | CE | SW8081B | |
| Chlordane | ND | 38 | | ug/Kg | 03/04/15 | CE | SW8081B | |
| d-BHC | ND | 7.6 | | ug/Kg | 03/04/15 | CE | SW8081B | |
| Dieldrin | ND | 3.8 | | ug/Kg | 03/04/15 | CE | SW8081B | |
| Endosulfan I | ND | 7.6 | | ug/Kg | 03/04/15 | CE | SW8081B | |
| Endosulfan II | ND | 7.6 | | ug/Kg | 03/04/15 | CE | SW8081B | |
| Endosulfan sulfate | ND | 7.6 | | ug/Kg | 03/04/15 | CE | SW8081B | |
| Endrin | ND | 7.6 | | ug/Kg | 03/04/15 | CE | SW8081B | |
| Endrin aldehyde | ND | 7.6 | | ug/Kg | 03/04/15 | CE | SW8081B | |
| Endrin ketone | ND | 7.6 | | ug/Kg | 03/04/15 | CE | SW8081B | |
| g-BHC | ND | 1.5 | | ug/Kg | 03/04/15 | CE | SW8081B | |
| g-Chlordane | ND | 3.8 | | ug/Kg | 03/04/15 | CE | SW8081B | |
| Heptachlor | ND | 7.6 | | ug/Kg | 03/04/15 | CE | SW8081B | |
| Heptachlor epoxide | ND | 7.6 | | ug/Kg | 03/04/15 | CE | SW8081B | |
| Methoxychlor | ND | 38 | | ug/Kg | 03/04/15 | CE | SW8081B | |
| Toxaphene | ND | 150 | | ug/Kg | 03/04/15 | CE | SW8081B | |
| **QA/QC Surrogates** | | | | | | | | |
| % DCBP | 79 | | | % | 03/04/15 | CE | 30 - 150 % | |
| % TCMX | 77 | | | % | 03/04/15 | CE | 30 - 150 % | |
| **TCLP Herbicides** | | | | | | | | |
| 2,4,5-TP (Silvex) | ND | 4.2 | | ug/L | 03/04/15 | BB | SW8151A | |
| 2,4-D | ND | 4.2 | | ug/L | 03/04/15 | BB | SW8151A | |
| **QA/QC Surrogates** | | | | | | | | |
| % DCAA | 46 | | | % | 03/04/15 | BB | 30 - 150 % | |
| **TCLP Pesticides** | | | | | | | | |
| 4,4' -DDD | ND | 1.0 | | ug/L | 03/04/15 | CE | SW8081B | |
| 4,4' -DDE | ND | 1.0 | | ug/L | 03/04/15 | CE | SW8081B | |
| 4,4' -DDT | ND | 1.0 | | ug/L | 03/04/15 | CE | SW8081B | |
| a-BHC | ND | 0.50 | | ug/L | 03/04/15 | CE | SW8081B | |
| Alachlor | ND | 0.50 | | ug/L | 03/04/15 | CE | SW8081B | 1 |
| Aldrin | ND | 0.50 | | ug/L | 03/04/15 | CE | SW8081B | |
| b-BHC | ND | 0.50 | | ug/L | 03/04/15 | CE | SW8081B | |
| Chlordane | ND | 5.0 | | ug/L | 03/04/15 | CE | SW8081B | |
| d-BHC | ND | 0.50 | | ug/L | 03/04/15 | CE | SW8081B | |
| Dieldrin | ND | 1.0 | | ug/L | 03/04/15 | CE | SW8081B | |
| Endosulfan I | ND | 0.50 | | ug/L | 03/04/15 | CE | SW8081B | |
| Endosulfan II | ND | 1.0 | | ug/L | 03/04/15 | CE | SW8081B | |
| Endosulfan Sulfate | ND | 1.0 | | ug/L | 03/04/15 | CE | SW8081B | |
| Endrin | ND | 1.0 | | ug/L | 03/04/15 | CE | SW8081B | |
| Endrin Aldehyde | ND | 1.0 | | ug/L | 03/04/15 | CE | SW8081B | |
| g-BHC (Lindane) | ND | 0.50 | | ug/L | 03/04/15 | CE | SW8081B | |
| Heptachlor | ND | 0.50 | | ug/L | 03/04/15 | CE | SW8081B | |
| Heptachlor epoxide | ND | 0.50 | | ug/L | 03/04/15 | CE | SW8081B | |
| Methoxychlor | ND | 0.50 | | ug/L | 03/04/15 | CE | SW8081B | |
| Toxaphene | ND | 20 | | ug/L | 03/04/15 | CE | SW8081B | |
| **QA/QC Surrogates** | | | | | | | | |

Project ID: 109 MARBLEDALE RD TUCKAHOE NY
Client ID: TB-13

Phoenix I.D.: BH78393

| Parameter | Result | RL/ PQL | LOD/ MDL | Units | Date/Time | By | Reference |
|---|---|---|---|---|---|---|---|
| %DCBP (Surrogate Rec) | 80 | | | % | 03/04/15 | CE | 30 - 150 % |
| %TCMX (Surrogate Rec) | 75 | | | % | 03/04/15 | CE | 30 - 150 % |
| **Extractable Petroleum Hydrocarbons** | | | | | | | |
| TPH to C44 | ND | 77 | | mg/Kg | 03/03/15 | JRB | SW8015D MOD |
| **QA/QC Surrogates** | | | | | | | |
| % Chlorobenzene (surrogate) | 60 | | | % | 03/03/15 | JRB | 60 - 120 % |
| % Pentacosane (surrogate) | 77 | | | % | 03/03/15 | JRB | 50 - 150 % |
| **Gasoline Range Organics (C6-C10)** | ND | 21 | | mg/Kg | 03/04/15 | JRB | SW8015D GRO |
| **Volatiles (TCL)** | | | | | | | |
| 1,1,1-Trichloroethane | ND | 6.5 | | ug/kg | 03/04/15 | JLI | SW8260C |
| 1,1,2,2-Tetrachloroethane | ND | 6.5 | | ug/kg | 03/04/15 | JLI | SW8260C |
| 1,1,2-Trichloroethane | ND | 6.5 | | ug/kg | 03/04/15 | JLI | SW8260C |
| 1,1-Dichloroethane | ND | 6.5 | | ug/kg | 03/04/15 | JLI | SW8260C |
| 1,1-Dichloroethene | ND | 6.5 | | ug/kg | 03/04/15 | JLI | SW8260C |
| 1,2,3-Trichlorobenzene | ND | 290 | | ug/kg | 03/04/15 | JLI | SW8260C |
| 1,2,4-Trichlorobenzene | ND | 290 | | ug/kg | 03/04/15 | JLI | SW8260C |
| 1,2-Dibromo-3-chloropropane | ND | 80 | | ug/kg | 03/04/15 | JLI | SW8260C |
| 1,2-Dibromoethane | ND | 6.5 | | ug/kg | 03/04/15 | JLI | SW8260C |
| 1,2-Dichlorobenzene | ND | 290 | | ug/kg | 03/04/15 | JLI | SW8260C |
| 1,2-Dichloroethane | ND | 6.5 | | ug/kg | 03/04/15 | JLI | SW8260C |
| 1,2-Dichloropropane | ND | 6.5 | | ug/kg | 03/04/15 | JLI | SW8260C |
| 1,3-Dichlorobenzene | ND | 290 | | ug/kg | 03/04/15 | JLI | SW8260C |
| 1,4-Dichlorobenzene | ND | 290 | | ug/kg | 03/04/15 | JLI | SW8260C |
| 2-Hexanone | ND | 33 | | ug/kg | 03/04/15 | JLI | SW8260C |
| 4-Methyl-2-pentanone | ND | 33 | | ug/kg | 03/04/15 | JLI | SW8260C |
| Acetone | ND | 65 | | ug/kg | 03/04/15 | JLI | SW8260C |
| Benzene | ND | 6.5 | | ug/kg | 03/04/15 | JLI | SW8260C |
| Bromochloromethane | ND | 6.5 | | ug/kg | 03/04/15 | JLI | SW8260C |
| Bromodichloromethane | ND | 6.5 | | ug/kg | 03/04/15 | JLI | SW8260C |
| Bromoform | ND | 6.5 | | ug/kg | 03/04/15 | JLI | SW8260C |
| Bromomethane | ND | 6.5 | | ug/kg | 03/04/15 | JLI | SW8260C |
| Carbon Disulfide | ND | 6.5 | | ug/kg | 03/04/15 | JLI | SW8260C |
| Carbon tetrachloride | ND | 6.5 | | ug/kg | 03/04/15 | JLI | SW8260C |
| Chlorobenzene | ND | 6.5 | | ug/kg | 03/04/15 | JLI | SW8260C |
| Chloroethane | ND | 6.5 | | ug/kg | 03/04/15 | JLI | SW8260C |
| Chloroform | ND | 6.5 | | ug/kg | 03/04/15 | JLI | SW8260C |
| Chloromethane | ND | 6.5 | | ug/kg | 03/04/15 | JLI | SW8260C |
| cis-1,2-Dichloroethene | ND | 6.5 | | ug/kg | 03/04/15 | JLI | SW8260C |
| cis-1,3-Dichloropropene | ND | 6.5 | | ug/kg | 03/04/15 | JLI | SW8260C |
| Cyclohexane | ND | 6.5 | | ug/kg | 03/04/15 | JLI | SW8260C |
| Dibromochloromethane | ND | 6.5 | | ug/kg | 03/04/15 | JLI | SW8260C |
| Dichlorodifluoromethane | ND | 6.5 | | ug/kg | 03/04/15 | JLI | SW8260C |
| Ethylbenzene | ND | 6.5 | | ug/kg | 03/04/15 | JLI | SW8260C |
| Isopropylbenzene | ND | 290 | | ug/kg | 03/04/15 | JLI | SW8260C |
| m&p-Xylene | ND | 6.5 | | ug/kg | 03/04/15 | JLI | SW8260C |
| Methyl ethyl ketone | ND | 39 | | ug/kg | 03/04/15 | JLI | SW8260C |
| Methyl t-butyl ether (MTBE) | ND | 13 | | ug/kg | 03/04/15 | JLI | SW8260C |
| Methylacetate | ND | 5.2 | | ug/kg | 03/04/15 | JLI | SW8260C |

| Parameter | Result | RL/ PQL | LOD/ MDL | Units | Date/Time | By | Reference |
|---|---|---|---|---|---|---|---|
| Methylcyclohexane | ND | 6.5 | | ug/kg | 03/04/15 | JLI | SW8260C |
| Methylene chloride | ND | 6.5 | | ug/kg | 03/04/15 | JLI | SW8260C |
| o-Xylene | ND | 6.5 | | ug/kg | 03/04/15 | JLI | SW8260C |
| Styrene | ND | 6.5 | | ug/kg | 03/04/15 | JLI | SW8260C |
| Tetrachloroethene | ND | 6.5 | | ug/kg | 03/04/15 | JLI | SW8260C |
| Toluene | ND | 6.5 | | ug/kg | 03/04/15 | JLI | SW8260C |
| Total Xylenes | ND | 6.5 | | ug/kg | 03/04/15 | JLI | SW8260C |
| trans-1,2-Dichloroethene | ND | 6.5 | | ug/kg | 03/04/15 | JLI | SW8260C |
| trans-1,3-Dichloropropene | ND | 6.5 | | ug/kg | 03/04/15 | JLI | SW8260C |
| Trichloroethene | ND | 6.5 | | ug/kg | 03/04/15 | JLI | SW8260C |
| Trichlorofluoromethane | ND | 6.5 | | ug/kg | 03/04/15 | JLI | SW8260C |
| Trichlorotrifluoroethane | ND | 6.5 | | ug/kg | 03/04/15 | JLI | SW8260C |
| Vinyl chloride | ND | 6.5 | | ug/kg | 03/04/15 | JLI | SW8260C |
| **QA/QC Surrogates** | | | | | | | |
| % 1,2-dichlorobenzene-d4 | 99 | | | % | 03/04/15 | JLI | 70 - 130 % |
| % Bromofluorobenzene | 96 | | | % | 03/04/15 | JLI | 70 - 130 % |
| % Dibromofluoromethane | 102 | | | % | 03/04/15 | JLI | 70 - 130 % |
| % Toluene-d8 | 84 | | | % | 03/04/15 | JLI | 70 - 130 % |
| **TCLP Volatiles** | | | | | | | |
| 1,1-Dichloroethene | ND | 25 | | ug/L | 03/03/15 | HM | SW8260C |
| 1,2-Dichloroethane | ND | 25 | | ug/L | 03/03/15 | HM | SW8260C |
| Benzene | ND | 25 | | ug/L | 03/03/15 | HM | SW8260C |
| Carbon tetrachloride | ND | 25 | | ug/L | 03/03/15 | HM | SW8260C |
| Chlorobenzene | ND | 25 | | ug/L | 03/03/15 | HM | SW8260C |
| Chloroform | ND | 25 | | ug/L | 03/03/15 | HM | SW8260C |
| Methyl ethyl ketone | ND | 25 | | ug/L | 03/03/15 | HM | SW8260C |
| Tetrachloroethene | ND | 25 | | ug/L | 03/03/15 | HM | SW8260C |
| Trichloroethene | ND | 25 | | ug/L | 03/03/15 | HM | SW8260C |
| Vinyl chloride | ND | 25 | | ug/L | 03/03/15 | HM | SW8260C |
| **QA/QC Surrogates** | | | | | | | |
| % 1,2-dichlorobenzene-d4 | 97 | | | % | 03/03/15 | HM | 70 - 130 % |
| % Bromofluorobenzene | 94 | | | % | 03/03/15 | HM | 70 - 130 % |
| % Dibromofluoromethane | 99 | | | % | 03/03/15 | HM | 70 - 130 % |
| % Toluene-d8 | 98 | | | % | 03/03/15 | HM | 70 - 130 % |
| Volatile Library Search Top 10 | Completed | | | | 03/05/15 | JLI | |
| **Semivolatiles** | | | | | | | |
| 1,1-Biphenyl | ND | 270 | | ug/Kg | 03/03/15 | DD | SW8270D |
| 1,2,4,5-Tetrachlorobenzene | ND | 270 | | ug/Kg | 03/03/15 | DD | SW8270D |
| 2,3,4,6-tetrachlorophenol | ND | 270 | | ug/Kg | 03/03/15 | DD | SW8270D |
| 2,4,5-Trichlorophenol | ND | 270 | | ug/Kg | 03/03/15 | DD | SW8270D |
| 2,4,6-Trichlorophenol | ND | 270 | | ug/Kg | 03/03/15 | DD | SW8270D |
| 2,4-Dichlorophenol | ND | 270 | | ug/Kg | 03/03/15 | DD | SW8270D |
| 2,4-Dimethylphenol | ND | 270 | | ug/Kg | 03/03/15 | DD | SW8270D |
| 2,4-Dinitrophenol | ND | 620 | | ug/Kg | 03/03/15 | DD | SW8270D |
| 2,4-Dinitrotoluene | ND | 270 | | ug/Kg | 03/03/15 | DD | SW8270D |
| 2,6-Dinitrotoluene | ND | 270 | | ug/Kg | 03/03/15 | DD | SW8270D |
| 2-Chloronaphthalene | ND | 270 | | ug/Kg | 03/03/15 | DD | SW8270D |

Project ID: 109 MARBLEDALE RD TUCKAHOE NY
Client ID: TB-13

Phoenix I.D.: BH78393

| Parameter | Result | RL/ PQL | LOD/ MDL | Units | Date/Time | By | Reference | |
|---|---|---|---|---|---|---|---|---|
| 2-Chlorophenol | ND | 270 | | ug/Kg | 03/03/15 | DD | SW8270D | |
| 2-Methylnaphthalene | ND | 270 | | ug/Kg | 03/03/15 | DD | SW8270D | |
| 2-Methylphenol (o-cresol) | ND | 270 | | ug/Kg | 03/03/15 | DD | SW8270D | |
| 2-Nitroaniline | ND | 620 | | ug/Kg | 03/03/15 | DD | SW8270D | |
| 2-Nitrophenol | ND | 270 | | ug/Kg | 03/03/15 | DD | SW8270D | |
| 3&4-Methylphenol (m&p-cresol) | ND | 390 | | ug/Kg | 03/03/15 | DD | SW8270D | 1 |
| 3,3'-Dichlorobenzidine | ND | 460 | | ug/Kg | 03/03/15 | DD | SW8270D | |
| 3-Nitroaniline | ND | 620 | | ug/Kg | 03/03/15 | DD | SW8270D | |
| 4,6-Dinitro-2-methylphenol | ND | 1100 | | ug/Kg | 03/03/15 | DD | SW8270D | |
| 4-Bromophenyl phenyl ether | ND | 390 | | ug/Kg | 03/03/15 | DD | SW8270D | |
| 4-Chloro-3-methylphenol | ND | 270 | | ug/Kg | 03/03/15 | DD | SW8270D | |
| 4-Chloroaniline | ND | 270 | | ug/Kg | 03/03/15 | DD | SW8270D | |
| 4-Chlorophenyl phenyl ether | ND | 270 | | ug/Kg | 03/03/15 | DD | SW8270D | |
| 4-Nitroaniline | ND | 620 | | ug/Kg | 03/03/15 | DD | SW8270D | |
| 4-Nitrophenol | ND | 1100 | | ug/Kg | 03/03/15 | DD | SW8270D | |
| Acenaphthene | ND | 270 | | ug/Kg | 03/03/15 | DD | SW8270D | |
| Acenaphthylene | ND | 270 | | ug/Kg | 03/03/15 | DD | SW8270D | |
| Acetophenone | ND | 270 | | ug/Kg | 03/03/15 | DD | SW8270D | |
| Anthracene | 340 | 270 | | ug/Kg | 03/03/15 | DD | SW8270D | |
| Atrazine | ND | 270 | | ug/Kg | 03/03/15 | DD | SW8270D | |
| Benz(a)anthracene | 630 | 270 | | ug/Kg | 03/03/15 | DD | SW8270D | |
| Benzaldehyde | ND | 270 | | ug/Kg | 03/03/15 | DD | SW8270D | |
| Benzo(a)pyrene | 580 | 270 | | ug/Kg | 03/03/15 | DD | SW8270D | |
| Benzo(b)fluoranthene | 710 | 270 | | ug/Kg | 03/03/15 | DD | SW8270D | |
| Benzo(ghi)perylene | 340 | 270 | | ug/Kg | 03/03/15 | DD | SW8270D | |
| Benzo(k)fluoranthene | 300 | 270 | | ug/Kg | 03/03/15 | DD | SW8270D | |
| Benzyl butyl phthalate | ND | 270 | | ug/Kg | 03/03/15 | DD | SW8270D | |
| Bis(2-chloroethoxy)methane | ND | 270 | | ug/Kg | 03/03/15 | DD | SW8270D | |
| Bis(2-chloroethyl)ether | ND | 390 | | ug/Kg | 03/03/15 | DD | SW8270D | |
| Bis(2-chloroisopropyl)ether | ND | 270 | | ug/Kg | 03/03/15 | DD | SW8270D | 1 |
| Bis(2-ethylhexyl)phthalate | ND | 270 | | ug/Kg | 03/03/15 | DD | SW8270D | |
| Caprolactam | ND | 270 | | ug/Kg | 03/03/15 | DD | SW8270D | |
| Carbazole | ND | 1100 | | ug/Kg | 03/03/15 | DD | SW8270D | |
| Chrysene | 640 | 270 | | ug/Kg | 03/03/15 | DD | SW8270D | |
| Dibenz(a,h)anthracene | ND | 270 | | ug/Kg | 03/03/15 | DD | SW8270D | |
| Dibenzofuran | ND | 270 | | ug/Kg | 03/03/15 | DD | SW8270D | |
| Diethyl phthalate | ND | 270 | | ug/Kg | 03/03/15 | DD | SW8270D | |
| Dimethylphthalate | ND | 270 | | ug/Kg | 03/03/15 | DD | SW8270D | |
| Di-n-butylphthalate | ND | 270 | | ug/Kg | 03/03/15 | DD | SW8270D | |
| Di-n-octylphthalate | ND | 270 | | ug/Kg | 03/03/15 | DD | SW8270D | |
| Fluoranthene | 1500 | 270 | | ug/Kg | 03/03/15 | DD | SW8270D | |
| Fluorene | ND | 270 | | ug/Kg | 03/03/15 | DD | SW8270D | |
| Hexachlorobenzene | ND | 270 | | ug/Kg | 03/03/15 | DD | SW8270D | |
| Hexachlorobutadiene | ND | 270 | | ug/Kg | 03/03/15 | DD | SW8270D | |
| Hexachlorocyclopentadiene | ND | 270 | | ug/Kg | 03/03/15 | DD | SW8270D | |
| Hexachloroethane | ND | 270 | | ug/Kg | 03/03/15 | DD | SW8270D | |
| Indeno(1,2,3-cd)pyrene | 320 | 270 | | ug/Kg | 03/03/15 | DD | SW8270D | |
| Isophorone | ND | 270 | | ug/Kg | 03/03/15 | DD | SW8270D | |
| Naphthalene | ND | 270 | | ug/Kg | 03/03/15 | DD | SW8270D | |

Project ID: 109 MARBLEDALE RD TUCKAHOE NY
Client ID: TB-13

Phoenix I.D.: BH78393

| Parameter | Result | RL/ PQL | LOD/ MDL | Units | Date/Time | By | Reference |
|---|---|---|---|---|---|---|---|
| Nitrobenzene | ND | 270 | | ug/Kg | 03/03/15 | DD | SW8270D |
| N-Nitrosodimethylamine | ND | 390 | | ug/Kg | 03/03/15 | DD | SW8270D |
| N-Nitrosodi-n-propylamine | ND | 270 | | ug/Kg | 03/03/15 | DD | SW8270D |
| N-Nitrosodiphenylamine | ND | 390 | | ug/Kg | 03/03/15 | DD | SW8270D |
| Pentachlorophenol | ND | 390 | | ug/Kg | 03/03/15 | DD | SW8270D |
| Phenanthrene | 1400 | 270 | | ug/Kg | 03/03/15 | DD | SW8270D |
| Phenol | ND | 270 | | ug/Kg | 03/03/15 | DD | SW8270D |
| Pyrene | 1200 | 270 | | ug/Kg | 03/03/15 | DD | SW8270D |
| **QA/QC Surrogates** | | | | | | | |
| % 2,4,6-Tribromophenol | 88 | | | % | 03/03/15 | DD | 30 - 130 % |
| % 2-Fluorobiphenyl | 83 | | | % | 03/03/15 | DD | 30 - 130 % |
| % 2-Fluorophenol | 77 | | | % | 03/03/15 | DD | 30 - 130 % |
| % Nitrobenzene-d5 | 81 | | | % | 03/03/15 | DD | 30 - 130 % |
| % Phenol-d5 | 78 | | | % | 03/03/15 | DD | 30 - 130 % |
| % Terphenyl-d14 | 97 | | | % | 03/03/15 | DD | 30 - 130 % |
| **TCLP Acid/Base-Neutral** | | | | | | | |
| 1,4-Dichlorobenzene | ND | 83 | | ug/L | 03/04/15 | DD | SW8270D |
| 2,4,5-Trichlorophenol | ND | 83 | | ug/L | 03/04/15 | DD | SW8270D |
| 2,4,6-Trichlorophenol | ND | 83 | | ug/L | 03/04/15 | DD | SW8270D |
| 2,4-Dinitrotoluene | ND | 83 | | ug/L | 03/04/15 | DD | SW8270D |
| 2-Methylphenol (o-cresol) | ND | 83 | | ug/L | 03/04/15 | DD | SW8270D |
| 3&4-Methylphenol (m&p-Cresol) | ND | 83 | | ug/L | 03/04/15 | DD | SW8270D |
| Hexachlorobenzene | ND | 83 | | ug/L | 03/04/15 | DD | SW8270D |
| Hexachlorobutadiene | ND | 83 | | ug/L | 03/04/15 | DD | SW8270D |
| Hexachloroethane | ND | 83 | | ug/L | 03/04/15 | DD | SW8270D |
| Nitrobenzene | ND | 83 | | ug/L | 03/04/15 | DD | SW8270D |
| Pentachlorophenol | ND | 83 | | ug/L | 03/04/15 | DD | SW8270D |
| Pyridine | ND | 83 | | ug/L | 03/04/15 | DD | SW8270D |
| **QA/QC Surrogates** | | | | | | | |
| % 2,4,6-Tribromophenol | 79 | | | % | 03/04/15 | DD | 15 - 110 % |
| % 2-Fluorobiphenyl | 56 | | | % | 03/04/15 | DD | 30 - 130 % |
| % 2-Fluorophenol | 52 | | | % | 03/04/15 | DD | 15 - 110 % |
| % Nitrobenzene-d5 | 65 | | | % | 03/04/15 | DD | 30 - 130 % |
| % Phenol-d5 | 43 | | | % | 03/04/15 | DD | 15 - 110 % |
| % Terphenyl-d14 | 58 | | | % | 03/04/15 | DD | 30 - 130 % |
| SVOA Library Search Top 15 | Completed | | | | 03/05/15 | DD | |

Project ID: 109 MARBLEDALE RD TUCKAHOE NY
Client ID: TB-13

Phoenix I.D.: BH78393

| Parameter | Result | RL/ PQL | LOD/ MDL | Units | Date/Time | By | Reference |
|---|---|---|---|---|---|---|---|

1 = This parameter is not certified by NY NELAC for this matrix. NY NELAC does not offer certification for all parameters at this time.
B = Present in blank, no bias suspected.

**RL/PQL=Reporting/Practical Quantitation Level (Equivalent to NELAC LOQ, Limit of Quanitation) ND=Not Detected**
**BRL=Below Reporting Level LOD=Limit of Detection MDL=Method Detection Limit**

## Comments:

Corrosivity is based solely on the pH analysis performed above.

Please be advised that the NY 375 soil criteria for chromium are based on hexavalent chromium and trivalent chromium.

Ignitability is based solely on the results of the closed cup flashpoint analysis performed above. Passed is >140 degree F.

The regulatory hold time for pH is immediately. This pH was performed in the laboratory and may be considered outside of hold-time.

The reactivity, reported above, is based only on the EPA Interim Guidance for Reactive Cyanide and Reactive Sulfide. This method is no longer listed in the current version of SW-846.

Volatile Comment:
There was a suppression of the last internal standard in the low level analysis, all affected compounds are reported from the methanol preserved high level analysis which did not exhibit this interference.

Hexavalent Chromium:
This sample is in a reducing state.

All soils, solids and sludges are reported on a dry weight basis unless otherwise noted in the sample comments.

If there are any questions regarding this data, please call Phoenix Client Services at extension 200.
This report must not be reproduced except in full as defined by the attached chain of custody.

**Phyllis Shiller, Laboratory Director**
**March 09, 2015**
**Reviewed and Released by: Bobbi Aloisa, Vice President**

1E
VOLATILE ORGANICS ANALYSIS DATA SHEET
TENTATIVELY IDENTIFIED COMPOUNDS

CLIENT ID

TB-11

Lab Name: Phoenix Environmental Labs

Client: HESNY-TUCK

Lab Code: Phoenix

Case No.:

SAS No.:

SDG No.: GBH78392

Matrix:(soil/water) SOIL

Lab Sample ID: BH78392

Sample wt/vol: 4.35 (g/mL) g

Lab File ID: 0304B11.D

Level: (low/med) ENL

Date Received: 03/02/15

% Moisture: not dec. 9

Date Analyzed: 03/04/15

GC Column: rtx-vms

ID: 0.18 (mm)

Dilution Factor: 1

Soil Extract Volume: 5000 (uL)

Soil Aliquot Vol (uL): 5000

Number TICs found: 0

CONCENTRATION UNITS:
(ug/L or ug/KG) ug/Kg

| CAS NUMBER | COMPOUND NAME | RT | EST. CONC. | Q |
|---|---|---|---|---|
| | | | | |

FORM I VOA-TIC

1E
VOLATILE ORGANICS ANALYSIS DATA SHEET
TENTATIVELY IDENTIFIED COMPOUNDS

CLIENT ID

TB-13

Lab Name: Phoenix Environmental Labs  Client: HESNY-TUCK

Lab Code: Phoenix  Case No.:  SAS No.:  SDG No.: GBH78392

Matrix:(soil/water) SOIL  Lab Sample ID: BH78393

Sample wt/vol: 4.5 (g/mL) g  Lab File ID: 0304B12.D

Level: (low/med) ENL  Date Received: 03/02/15

% Moisture: not dec. 15  Date Analyzed: 03/04/15

GC Column: rtx-vms  ID: 0.18 (mm)  Dilution Factor: 1

Soil Extract Volume: 5000 (uL)  Soil Aliquot Vol (uL): 5000

Number TICs found: 0  CONCENTRATION UNITS: (ug/L or ug/KG) ug/Kg

| CAS NUMBER | COMPOUND NAME | RT | EST. CONC. | Q |
|---|---|---|---|---|
| | | | | |

FORM I VOA-TIC

1F
SEMIVOLATILE ORGANICS ANALYSIS DATA SHEET
TENTATIVELY IDENTIFIED COMPOUNDS

CLIENT ID
TB-11

Lab Name: Phoenix Environmental Labs  Client: HESNY-TUCK

Lab Code: Phoenix  Case No.:  SAS No.:  SDG No.: GBH78392

Matrix:(soil/water) SOIL  Lab Sample ID: BH78392

Sample wt/vol: 15.39 (g/mL) g  Lab File ID: 0304_21.D

Level: (low/med) Low  Date Received: 03/02/15

% Moisture: not dec. 9 decanted:(Y/N) NA  Date Extracted: 03/04/15

GPC Cleanup (Y/N): N pH: NA  Date Analyzed: 3/4/2015

Conc. Extract Volume: 5000 (uL)  Dilution Factor 2

Injection Volume: 2 (uL)

Number TICs found: 0  CONCENTRATION UNITS: (ug/L or ug/KG) ug/Kg

| CAS NUMBER | COMPOUND NAME | RT | EST. CONC. | Q |
|---|---|---|---|---|
| | | | | |

FORM I SEMIVOA-TIC

1F
SEMIVOLATILE ORGANICS ANALYSIS DATA SHEET
TENTATIVELY IDENTIFIED COMPOUNDS

CLIENT ID
TB-13

Lab Name: Phoenix Environmental Labs  Client: HESNY-TUCK

Lab Code: Phoenix  Case No.:  SAS No.:  SDG No.: GBH78392

Matrix:(soil/water) SOIL  Lab Sample ID: BH78393

Sample wt/vol: 15.19 (g/mL) g  Lab File ID: 0302_22.D

Level: (low/med) Low  Date Received: 03/02/15

% Moisture: not dec. 15 decanted:(Y/N) NA  Date Extracted: 03/03/15

GPC Cleanup (Y/N): N pH: NA  Date Analyzed: 3/3/2015

Conc. Extract Volume: 1000 (uL)  Dilution Factor 1

Injection Volume: 2 (uL)

Number TICs found: 2  CONCENTRATION UNITS: (ug/L or ug/KG) ug/Kg

| CAS NUMBER | COMPOUND NAME | RT | EST. CONC. | Q |
|---|---|---|---|---|
| | Unknown | 3.769 | 1400 | JN |
| 000192-97-2 | Benzo[e]pyrene | 19.592 | 440 | JN |

FORM I SEMIVOA-TIC

PHOENIX

Environmental Laboratories, Inc.
587 East Middle Turnpike, P.O.Box 370, Manchester, CT 06045
Tel. (860) 645-1102 Fax (860) 645-0823

ACCREDITED IN ACCORDANCE WITH nelac NY # 11301

# QA/QC Report

March 09, 2015

## QA/QC Data

SDG I.D.: GBH78392

| Parameter | Blank | Sample Result | Dup Result | Dup RPD | LCS % | LCSD % | LCS RPD | MS % | MSD % | MS RPD | % Rec Limits | % RPD Limits | |
|---|---|---|---|---|---|---|---|---|---|---|---|---|---|
| QA/QC Batch 300495, QC Sample No: BH78121 (BH78392, BH78393) | | | | | | | | | | | | | |
| **ICP Metals - TCLP Extraction** | | | | | | | | | | | | | |
| Arsenic | BRL | <0.01 | <0.01 | NC | 108 | 110 | 1.8 | 108 | 111 | 2.7 | 75 - 125 | 20 | |
| Barium | 0.02 | 0.60 | 0.62 | 3.30 | 95.3 | 97.0 | 1.8 | 92.9 | 97.6 | 4.9 | 75 - 125 | 20 | |
| Cadmium | BRL | 0.009 | 0.008 | NC | 97.9 | 100 | 2.1 | 98.0 | 101 | 3.0 | 75 - 125 | 20 | |
| Chromium | BRL | <0.010 | <0.010 | NC | 98.7 | 101 | 2.3 | 99.6 | 102 | 2.4 | 75 - 125 | 20 | |
| Copper | BRL | 1.90 | 1.94 | 2.10 | 105 | 108 | 2.8 | 105 | 115 | 9.1 | 75 - 125 | 20 | |
| Lead | BRL | 0.259 | 0.264 | 1.90 | 98.0 | 99.8 | 1.8 | 98.0 | 101 | 3.0 | 75 - 125 | 20 | |
| Nickel | BRL | 0.087 | 0.088 | 1.10 | 97.0 | 99.0 | 2.0 | 96.5 | 99.3 | 2.9 | 75 - 125 | 20 | |
| Selenium | BRL | <0.04 | <0.01 | NC | 106 | 107 | 0.9 | 106 | 107 | 0.9 | 75 - 125 | 20 | |
| Silver | BRL | <0.005 | <0.010 | NC | 107 | 109 | 1.9 | 109 | 111 | 1.8 | 75 - 125 | 20 | |
| Zinc | BRL | 3.73 | 3.82 | 2.40 | 102 | 105 | 2.9 | 93.1 | 110 | 16.6 | 75 - 125 | 20 | |
| QA/QC Batch 300603, QC Sample No: BH78166 (BH78392, BH78393) | | | | | | | | | | | | | |
| Mercury - Soil | BRL | <0.03 | <0.03 | NC | 97.0 | 101 | 4.0 | 105 | 98.8 | 6.1 | 70 - 130 | 30 | |

**Comment:**

Additional Mercury criteria: LCS acceptance range for waters is 80-120% and for soils is 70-130%.

| Parameter | Blank | Sample Result | Dup Result | Dup RPD | LCS % | LCSD % | LCS RPD | MS % | MSD % | MS RPD | % Rec Limits | % RPD Limits | |
|---|---|---|---|---|---|---|---|---|---|---|---|---|---|
| QA/QC Batch 300557, QC Sample No: BH78307 (BH78392, BH78393) | | | | | | | | | | | | | |
| **ICP Metals - Soil** | | | | | | | | | | | | | |
| Aluminum | BRL | 5790 | 6480 | 11.2 | 103 | 99.1 | 3.9 | NC | NC | NC | 75 - 125 | 30 | |
| Antimony | BRL | <1.8 | <3.6 | NC | 105 | 110 | 4.7 | 88.6 | 90.4 | 2.0 | 75 - 125 | 30 | |
| Arsenic | BRL | 1.3 | 1.47 | NC | 99.2 | 97.0 | 2.2 | 92.0 | 94.5 | 2.7 | 75 - 125 | 30 | |
| Barium | BRL | 62.5 | 49.3 | 23.6 | 111 | 112 | 0.9 | 91.1 | 94.3 | 3.5 | 75 - 125 | 30 | |
| Beryllium | BRL | 0.31 | 0.33 | NC | 103 | 101 | 2.0 | 96.6 | 94.6 | 2.1 | 75 - 125 | 30 | |
| Cadmium | BRL | <0.36 | <0.36 | NC | 88.6 | 89.6 | 1.1 | 92.6 | 95.9 | 3.5 | 75 - 125 | 30 | |
| Calcium | BRL | 310 | 385 | 21.6 | 103 | 102 | 1.0 | >130 | >130 | NC | 75 - 125 | 30 | m |
| Chromium | BRL | 12.2 | 13.3 | 8.60 | 103 | 106 | 2.9 | 103 | 104 | 1.0 | 75 - 125 | 30 | |
| Cobalt | BRL | 5.19 | 6.00 | 14.5 | 88.1 | 89.9 | 2.0 | 96.4 | 99.4 | 3.1 | 75 - 125 | 30 | |
| Copper | BRL | 10.7 | 11.4 | 6.30 | 95.1 | 94.8 | 0.3 | 104 | 107 | 2.8 | 75 - 125 | 30 | |
| Iron | BRL | 13500 | 16000 | 16.9 | 87.9 | 90.3 | 2.7 | NC | NC | NC | 75 - 125 | 30 | |
| Lead | BRL | 4.6 | 4.32 | 6.30 | 91.5 | 93.9 | 2.6 | 93.6 | 96.8 | 3.4 | 75 - 125 | 30 | |
| Magnesium | BRL | 1310 | 1530 | 15.5 | 103 | 102 | 1.0 | NC | NC | NC | 75 - 125 | 30 | |
| Manganese | BRL | 503 | 462 | 8.50 | 111 | 110 | 0.9 | 105 | 65.4 | 46.5 | 75 - 125 | 30 | m,r |
| Nickel | BRL | 8.91 | 9.24 | 3.60 | 101 | 102 | 1.0 | 96.1 | 99.4 | 3.4 | 75 - 125 | 30 | |
| Potassium | BRL | 686 | 653 | 4.90 | 96.4 | 90.9 | 5.9 | >130 | >130 | NC | 75 - 125 | 30 | m |
| Selenium | BRL | <1.4 | <1.4 | NC | 87.8 | 89.2 | 1.6 | 79.3 | 82.1 | 3.5 | 75 - 125 | 30 | |
| Silver | BRL | <0.36 | <0.36 | NC | 102 | 103 | 1.0 | 96.9 | 100 | 3.1 | 75 - 125 | 30 | |
| Sodium | BRL | 414 | 459 | 10.3 | 109 | 103 | 5.7 | >130 | >130 | NC | 75 - 125 | 30 | m |
| Thallium | BRL | <1.4 | <3.2 | NC | 100 | 101 | 1.0 | 94.8 | 98.0 | 3.3 | 75 - 125 | 30 | |
| Vanadium | BRL | 20.2 | 22.7 | 11.7 | 110 | 115 | 4.4 | 104 | 105 | 1.0 | 75 - 125 | 30 | |
| Zinc | BRL | 19.2 | 21.1 | 9.40 | 91.8 | 91.7 | 0.1 | 95.6 | 98.4 | 2.9 | 75 - 125 | 30 | |
| QA/QC Batch 300605, QC Sample No: BH78502 (BH78392, BH78393) | | | | | | | | | | | | | |
| Mercury - Water | BRL | <0.0002 | <0.0002 | NC | 107 | 96.5 | 10.3 | 103 | 99.0 | 4.0 | 70 - 130 | 20 | |

# QA/QC Data

SDG I.D.: GBH78392

| Parameter | Blank | Sample Result | Dup Result | Dup RPD | LCS % | LCSD % | LCS RPD | MS % | MSD % | MS RPD | % Rec Limits | % RPD Limits | |
|---|---|---|---|---|---|---|---|---|---|---|---|---|---|
| **Comment:** | | | | | | | | | | | | | |
| Additional Mercury criteria: LCS acceptance range for waters is 80-120% and for soils is 70-130%. | | | | | | | | | | | | | |
| QA/QC Batch 300842, QC Sample No: BH79033 (BH78392, BH78393) | | | | | | | | | | | | | |
| **Hex Chromium - Solid** | | | | | | | | | | | | | |
| Hexavalent Cr | BRL | <0.52 | <0.52 | NC | 98.3 | | | | | | 70 - 130 | 30 | |
| Insoluble Cr | | | | | 92.2 | | | 81.8 | | | 70 - 130 | 30 | |
| Soluble Cr | | | | | 96.2 | | | 37.3 | | | 70 - 130 | 30 | m |
| **Comment:** | | | | | | | | | | | | | |
| Soluble spike was analyzed twice with similar recoveries. | | | | | | | | | | | | | |

m = This parameter is outside laboratory ms/msd specified recovery limits.
r = This parameter is outside laboratory rpd specified recovery limits.

PHOENIX

Environmental Laboratories, Inc.
587 East Middle Turnpike, P.O.Box 370, Manchester, CT 06045
Tel. (860) 645-1102 Fax (860) 645-0823

ACCREDITED IN ACCORDANCE WITH nelac
NY # 11301

# QA/QC Report

March 09, 2015

## QA/QC Data

SDG I.D.: GBH78392

| Parameter | Blank | Sample Result | Dup Result | Dup RPD | LCS % | LCSD % | LCS RPD | MS % | MSD % | MS RPD | % Rec Limits | % RPD Limits |
|---|---|---|---|---|---|---|---|---|---|---|---|---|
| QA/QC Batch 300506, QC Sample No: BH78121 (BH78392, BH78393) | | | | | | | | | | | | |
| Flash Point | | >200 | >200 | NC | 101 | | | | | | 85 - 115 | 30 |
| QA/QC Batch 300594, QC Sample No: BH78392 (BH78392, BH78393) | | | | | | | | | | | | |
| pH - Soil | | 10.88 | 10.97 | 0.80 | 97.9 | | | | | | 85 - 115 | 20 |
| QA/QC Batch 300676, QC Sample No: BH78392 (BH78392, BH78393) | | | | | | | | | | | | |
| Reactivity Cyanide | BRL | <5.5 | <5.4 | NC | 96.2 | | | | | | 85 - 115 | 30 |

PHOENIX

Environmental Laboratories, Inc.
587 East Middle Turnpike, P.O.Box 370, Manchester, CT 06045
Tel. (860) 645-1102 Fax (860) 645-0823

ACCREDITED IN ACCORDANCE WITH nelac
NY # 11301

# QA/QC Report

March 09, 2015

## QA/QC Data

SDG I.D.: GBH78392

| Parameter | Blank | LCS % | LCSD % | LCS RPD | MS % | MSD % | MS RPD | % Rec Limits | % RPD Limits | |
|---|---|---|---|---|---|---|---|---|---|---|
| QA/QC Batch 300248, QC Sample No: BH73653 (BH78392, BH78393) | | | | | | | | | | |
| **TPH by GC - Solid** | | | | | | | | | | |
| Total Petroleum Hydrocarbon | ND | 66 | 78 | 16.7 | 141 | 139 | 1.4 | 60 - 120 | 30 | |
| % Chlorobenzene (surrogate) | 41 | 43 | 48 | 11.0 | 47 | 49 | 4.2 | 60 - 120 | 30 | l,m |
| % Pentacosane (surrogate) | 47 | 52 | 63 | 19.1 | 117 | 94 | 21.8 | 50 - 150 | 30 | |
| QA/QC Batch 300419, QC Sample No: BH77341 (BH78392, BH78393) | | | | | | | | | | |
| **Chlorinated Herbicides** | | | | | | | | | | |
| 2,4,5-TP (Silvex) | ND | 81 | 86 | 6.0 | | | | 40 - 140 | 20 | |
| 2,4-D | ND | 68 | 59 | 14.2 | | | | 40 - 140 | 20 | |
| % DCAA (Surrogate Rec) | 46 | 67 | 76 | 12.6 | | | | 30 - 150 | 20 | |

**Comment:**

A LCS and LCSD were performed instead of a matrix spike and matrix spike duplicate.

| | | | | | | | | | | |
|---|---|---|---|---|---|---|---|---|---|---|
| QA/QC Batch 300546, QC Sample No: BH77518 (BH78392, BH78393) | | | | | | | | | | |
| **Semivolatiles** | | | | | | | | | | |
| 1,4-Dichlorobenzene | ND | 64 | 65 | 1.6 | | | | 30 - 130 | 20 | |
| 2,4,5-Trichlorophenol | ND | 93 | 92 | 1.1 | | | | 30 - 130 | 20 | |
| 2,4,6-Trichlorophenol | ND | 87 | 88 | 1.1 | | | | 30 - 130 | 20 | |
| 2,4-Dinitrotoluene | ND | 91 | 93 | 2.2 | | | | 30 - 130 | 20 | |
| 2-Methylphenol (o-cresol) | ND | 79 | 81 | 2.5 | | | | 30 - 130 | 20 | |
| 3&4-Methylphenol (m&p-cresol) | ND | 79 | 81 | 2.5 | | | | 30 - 130 | 20 | |
| Hexachlorobenzene | ND | 84 | 85 | 1.2 | | | | 30 - 130 | 20 | |
| Hexachlorobutadiene | ND | 69 | 70 | 1.4 | | | | 30 - 130 | 20 | |
| Hexachloroethane | ND | 59 | 60 | 1.7 | | | | 30 - 130 | 20 | |
| Nitrobenzene | ND | 78 | 80 | 2.5 | | | | 30 - 130 | 20 | |
| Pentachlorophenol | ND | 95 | 95 | 0.0 | | | | 30 - 130 | 20 | |
| Pyridine | ND | 33 | 34 | 3.0 | | | | 30 - 130 | 20 | |
| % 2,4,6-Tribromophenol | 76 | 81 | 81 | 0.0 | | | | 15 - 110 | 20 | |
| % 2-Fluorobiphenyl | 62 | 72 | 74 | 2.7 | | | | 30 - 130 | 20 | |
| % 2-Fluorophenol | 45 | 59 | 59 | 0.0 | | | | 15 - 110 | 20 | |
| % Nitrobenzene-d5 | 59 | 72 | 74 | 2.7 | | | | 30 - 130 | 20 | |
| % Phenol-d5 | 40 | 49 | 51 | 4.0 | | | | 15 - 110 | 20 | |
| % Terphenyl-d14 | 90 | 92 | 93 | 1.1 | | | | 30 - 130 | 20 | |

**Comment:**

A LCS and LCS Duplicate were performed instead of a matrix spike and matrix spike duplicate.

Additional 8270 criteria: 20% of compounds can be outside of acceptance criteria as long as recovery is at least 10%. (Acid surrogates acceptance range for aqueous samples: 15-110%, for soils 30-130%)

| | | | | | | | | | | |
|---|---|---|---|---|---|---|---|---|---|---|
| QA/QC Batch 300444, QC Sample No: BH77859 (BH78392, BH78393) | | | | | | | | | | |
| **Semivolatiles - Solid** | | | | | | | | | | |
| 1,1-Biphenyl | ND | 76 | 79 | 3.9 | 84 | 83 | 1.2 | 30 - 130 | 30 | |
| 1,2,4,5-Tetrachlorobenzene | ND | 77 | 82 | 6.3 | 84 | 86 | 2.4 | 30 - 130 | 30 | |
| 2,3,4,6-tetrachlorophenol | ND | 94 | 98 | 4.2 | 104 | 104 | 0.0 | 30 - 130 | 30 | |

# QA/QC Data

SDG I.D.: GBH78392

| Parameter | Blank | LCS % | LCSD % | LCS RPD | MS % | MSD % | MS RPD | % Rec Limits | % RPD Limits | |
|---|---|---|---|---|---|---|---|---|---|---|
| 2,4,5-Trichlorophenol | ND | 88 | 92 | 4.4 | 98 | 98 | 0.0 | 30 - 130 | 30 | |
| 2,4,6-Trichlorophenol | ND | 87 | 91 | 4.5 | 94 | 94 | 0.0 | 30 - 130 | 30 | |
| 2,4-Dichlorophenol | ND | 82 | 88 | 7.1 | 89 | 91 | 2.2 | 30 - 130 | 30 | |
| 2,4-Dimethylphenol | ND | 78 | 80 | 2.5 | 81 | 77 | 5.1 | 30 - 130 | 30 | |
| 2,4-Dinitrophenol | ND | 26 | 31 | 17.5 | 18 | 21 | 15.4 | 30 - 130 | 30 | l,m |
| 2,4-Dinitrotoluene | ND | 88 | 90 | 2.2 | 94 | 94 | 0.0 | 30 - 130 | 30 | |
| 2,6-Dinitrotoluene | ND | 86 | 90 | 4.5 | 94 | 94 | 0.0 | 30 - 130 | 30 | |
| 2-Chloronaphthalene | ND | 77 | 81 | 5.1 | 85 | 85 | 0.0 | 30 - 130 | 30 | |
| 2-Chlorophenol | ND | 75 | 81 | 7.7 | 83 | 84 | 1.2 | 30 - 130 | 30 | |
| 2-Methylnaphthalene | ND | 80 | 85 | 6.1 | 87 | 89 | 2.3 | 30 - 130 | 30 | |
| 2-Methylphenol (o-cresol) | ND | 74 | 79 | 6.5 | 79 | 80 | 1.3 | 30 - 130 | 30 | |
| 2-Nitroaniline | ND | 89 | 95 | 6.5 | 86 | 91 | 5.6 | 30 - 130 | 30 | |
| 2-Nitrophenol | ND | 79 | 84 | 6.1 | 88 | 90 | 2.2 | 30 - 130 | 30 | |
| 3&4-Methylphenol (m&p-cresol) | ND | 82 | 87 | 5.9 | 86 | 88 | 2.3 | 30 - 130 | 30 | |
| 3,3'-Dichlorobenzidine | ND | 76 | 82 | 7.6 | 77 | 78 | 1.3 | 30 - 130 | 30 | |
| 3-Nitroaniline | ND | 85 | 89 | 4.6 | 87 | 92 | 5.6 | 30 - 130 | 30 | |
| 4,6-Dinitro-2-methylphenol | ND | 49 | 57 | 15.1 | 75 | 78 | 3.9 | 30 - 130 | 30 | |
| 4-Bromophenyl phenyl ether | ND | 81 | 85 | 4.8 | 92 | 90 | 2.2 | 30 - 130 | 30 | |
| 4-Chloro-3-methylphenol | ND | 88 | 93 | 5.5 | 94 | 96 | 2.1 | 30 - 130 | 30 | |
| 4-Chloroaniline | ND | 74 | 77 | 4.0 | 76 | 77 | 1.3 | 30 - 130 | 30 | |
| 4-Chlorophenyl phenyl ether | ND | 81 | 84 | 3.6 | 88 | 87 | 1.1 | 30 - 130 | 30 | |
| 4-Nitroaniline | ND | 85 | 90 | 5.7 | 92 | 93 | 1.1 | 30 - 130 | 30 | |
| 4-Nitrophenol | ND | 93 | 100 | 7.3 | 97 | 98 | 1.0 | 30 - 130 | 30 | |
| Acenaphthene | ND | 84 | 88 | 4.7 | 91 | 90 | 1.1 | 30 - 130 | 30 | |
| Acenaphthylene | ND | 78 | 81 | 3.8 | 85 | 84 | 1.2 | 30 - 130 | 30 | |
| Acetophenone | ND | 78 | 83 | 6.2 | 84 | 86 | 2.4 | 30 - 130 | 30 | |
| Anthracene | ND | 81 | 87 | 7.1 | 91 | 89 | 2.2 | 30 - 130 | 30 | |
| Atrazine | ND | 80 | 82 | 2.5 | 91 | 82 | 10.4 | 30 - 130 | 30 | |
| Benz(a)anthracene | ND | 84 | 89 | 5.8 | 90 | 90 | 0.0 | 30 - 130 | 30 | |
| Benzaldehyde | ND | 53 | 63 | 17.2 | 125 | 141 | 12.0 | 30 - 130 | 30 | m |
| Benzo(a)pyrene | ND | 81 | 86 | 6.0 | 89 | 89 | 0.0 | 30 - 130 | 30 | |
| Benzo(b)fluoranthene | ND | 78 | 82 | 5.0 | 88 | 85 | 3.5 | 30 - 130 | 30 | |
| Benzo(ghi)perylene | ND | 90 | 96 | 6.5 | 101 | 99 | 2.0 | 30 - 130 | 30 | |
| Benzo(k)fluoranthene | ND | 81 | 87 | 7.1 | 88 | 89 | 1.1 | 30 - 130 | 30 | |
| Benzyl butyl phthalate | ND | 85 | 88 | 3.5 | 97 | 92 | 5.3 | 30 - 130 | 30 | |
| Bis(2-chloroethoxy)methane | ND | 80 | 83 | 3.7 | 86 | 86 | 0.0 | 30 - 130 | 30 | |
| Bis(2-chloroethyl)ether | ND | 64 | 68 | 6.1 | 68 | 71 | 4.3 | 30 - 130 | 30 | |
| Bis(2-chloroisopropyl)ether | ND | 66 | 70 | 5.9 | 72 | 73 | 1.4 | 30 - 130 | 30 | |
| Bis(2-ethylhexyl)phthalate | ND | 85 | 88 | 3.5 | 96 | 91 | 5.3 | 30 - 130 | 30 | |
| Caprolactam | ND | 78 | 80 | 2.5 | 87 | 87 | 0.0 | 30 - 130 | 30 | |
| Carbazole | ND | 84 | 89 | 5.8 | 92 | 87 | 5.6 | 30 - 130 | 30 | |
| Chrysene | ND | 88 | 93 | 5.5 | 95 | 96 | 1.0 | 30 - 130 | 30 | |
| Dibenz(a,h)anthracene | ND | 89 | 95 | 6.5 | 101 | 98 | 3.0 | 30 - 130 | 30 | |
| Dibenzofuran | ND | 83 | 88 | 5.8 | 90 | 90 | 0.0 | 30 - 130 | 30 | |
| Diethyl phthalate | ND | 85 | 85 | 0.0 | 91 | 89 | 2.2 | 30 - 130 | 30 | |
| Dimethylphthalate | ND | 83 | 85 | 2.4 | 91 | 89 | 2.2 | 30 - 130 | 30 | |
| Di-n-butylphthalate | ND | 77 | 80 | 3.8 | 88 | 80 | 9.5 | 30 - 130 | 30 | |
| Di-n-octylphthalate | ND | 90 | 95 | 5.4 | 97 | 97 | 0.0 | 30 - 130 | 30 | |
| Fluoranthene | ND | 79 | 85 | 7.3 | 90 | 86 | 4.5 | 30 - 130 | 30 | |
| Fluorene | ND | 82 | 85 | 3.6 | 89 | 88 | 1.1 | 30 - 130 | 30 | |
| Hexachlorobenzene | ND | 79 | 82 | 3.7 | 90 | 84 | 6.9 | 30 - 130 | 30 | |
| Hexachlorobutadiene | ND | 74 | 77 | 4.0 | 82 | 82 | 0.0 | 30 - 130 | 30 | |
| Hexachlorocyclopentadiene | ND | 90 | 100 | 10.5 | 91 | 102 | 11.4 | 30 - 130 | 30 | |

# QA/QC Data

SDG I.D.: GBH78392

| Parameter | Blank | LCS % | LCSD % | LCS RPD | MS % | MSD % | MS RPD | % Rec Limits | % RPD Limits |
|---|---|---|---|---|---|---|---|---|---|
| Hexachloroethane | ND | 66 | 71 | 7.3 | 72 | 73 | 1.4 | 30 - 130 | 30 |
| Indeno(1,2,3-cd)pyrene | ND | 89 | 96 | 7.6 | 101 | 99 | 2.0 | 30 - 130 | 30 |
| Isophorone | ND | 75 | 77 | 2.6 | 81 | 80 | 1.2 | 30 - 130 | 30 |
| Naphthalene | ND | 74 | 80 | 7.8 | 81 | 83 | 2.4 | 30 - 130 | 30 |
| Nitrobenzene | ND | 73 | 79 | 7.9 | 79 | 82 | 3.7 | 30 - 130 | 30 |
| N-Nitrosodimethylamine | ND | 58 | 62 | 6.7 | 63 | 63 | 0.0 | 30 - 130 | 30 |
| N-Nitrosodi-n-propylamine | ND | 76 | 80 | 5.1 | 82 | 83 | 1.2 | 30 - 130 | 30 |
| N-Nitrosodiphenylamine | ND | 85 | 87 | 2.3 | 89 | 91 | 2.2 | 30 - 130 | 30 |
| Pentachlorophenol | ND | 104 | 114 | 9.2 | 127 | 124 | 2.4 | 30 - 130 | 30 |
| Phenanthrene | ND | 82 | 86 | 4.8 | 91 | 88 | 3.4 | 30 - 130 | 30 |
| Phenol | ND | 71 | 77 | 8.1 | 77 | 79 | 2.6 | 30 - 130 | 30 |
| Pyrene | ND | 79 | 83 | 4.9 | 90 | 85 | 5.7 | 30 - 130 | 30 |
| % 2,4,6-Tribromophenol | 100 | 83 | 88 | 5.8 | 92 | 91 | 1.1 | 30 - 130 | 30 |
| % 2-Fluorobiphenyl | 77 | 75 | 79 | 5.2 | 83 | 83 | 0.0 | 30 - 130 | 30 |
| % 2-Fluorophenol | 64 | 70 | 75 | 6.9 | 76 | 77 | 1.3 | 30 - 130 | 30 |
| % Nitrobenzene-d5 | 67 | 71 | 78 | 9.4 | 77 | 80 | 3.8 | 30 - 130 | 30 |
| % Phenol-d5 | 70 | 73 | 79 | 7.9 | 79 | 81 | 2.5 | 30 - 130 | 30 |
| % Terphenyl-d14 | 88 | 84 | 90 | 6.9 | 98 | 93 | 5.2 | 30 - 130 | 30 |

**Comment:**

Additional 8270 criteria: 20% of compounds can be outside of acceptance criteria as long as recovery is at least 10%. (Acid surrogates acceptance range for aqueous samples: 15-110%, for soils 30-130%)

QA/QC Batch 300457, QC Sample No: BH78084 (BH78392, BH78393)

## Pesticides - Solid

| | | | | | | | | | |
|---|---|---|---|---|---|---|---|---|---|
| 4,4' -DDD | ND | 128 | 130 | 1.6 | 130 | 132 | 1.5 | 40 - 140 | 30 |
| 4,4' -DDE | ND | 108 | 110 | 1.8 | 102 | 103 | 1.0 | 40 - 140 | 30 |
| 4,4' -DDT | ND | 116 | 119 | 2.6 | 113 | 111 | 1.8 | 40 - 140 | 30 |
| a-BHC | ND | 112 | 115 | 2.6 | 104 | 106 | 1.9 | 40 - 140 | 30 |
| a-Chlordane | ND | 110 | 113 | 2.7 | 104 | 108 | 3.8 | 40 - 140 | 30 |
| Aldrin | ND | 105 | 106 | 0.9 | 98 | 98 | 0.0 | 40 - 140 | 30 |
| b-BHC | ND | 112 | 110 | 1.8 | 107 | 107 | 0.0 | 40 - 140 | 30 |
| Chlordane | ND | 104 | 105 | 1.0 | 98 | 99 | 1.0 | 40 - 140 | 30 |
| d-BHC | ND | 89 | 89 | 0.0 | 85 | 86 | 1.2 | 40 - 140 | 30 |
| Dieldrin | ND | 104 | 108 | 3.8 | 102 | 103 | 1.0 | 40 - 140 | 30 |
| Endosulfan I | ND | 114 | 112 | 1.8 | 105 | 107 | 1.9 | 40 - 140 | 30 |
| Endosulfan II | ND | 104 | 91 | 13.3 | 106 | 104 | 1.9 | 40 - 140 | 30 |
| Endosulfan sulfate | ND | 84 | 79 | 6.1 | 83 | 84 | 1.2 | 40 - 140 | 30 |
| Endrin | ND | 109 | 112 | 2.7 | 107 | 107 | 0.0 | 40 - 140 | 30 |
| Endrin aldehyde | ND | 107 | 90 | 17.3 | 105 | 111 | 5.6 | 40 - 140 | 30 |
| Endrin ketone | ND | 109 | 113 | 3.6 | 103 | 105 | 1.9 | 40 - 140 | 30 |
| g-BHC | ND | 112 | 115 | 2.6 | 119 | 120 | 0.8 | 40 - 140 | 30 |
| g-Chlordane | ND | 104 | 105 | 1.0 | 98 | 99 | 1.0 | 40 - 140 | 30 |
| Heptachlor | ND | 111 | 116 | 4.4 | 105 | 108 | 2.8 | 40 - 140 | 30 |
| Heptachlor epoxide | ND | 109 | 112 | 2.7 | 104 | 104 | 0.0 | 40 - 140 | 30 |
| Methoxychlor | ND | 113 | 115 | 1.8 | 114 | 110 | 3.6 | 40 - 140 | 30 |
| Toxaphene | ND | NA | NA | NC | NA | NA | NC | 40 - 140 | 30 |
| % DCBP | 98 | 94 | 96 | 2.1 | 87 | 87 | 0.0 | 30 - 150 | 30 |
| % TCMX | 86 | 87 | 90 | 3.4 | 79 | 81 | 2.5 | 30 - 150 | 30 |

QA/QC Batch 300456, QC Sample No: BH78084 (BH78392, BH78393)

## Polychlorinated Biphenyls - Solid

| | | | | | | | | | |
|---|---|---|---|---|---|---|---|---|---|
| PCB-1016 | ND | 95 | 95 | 0.0 | 92 | 89 | 3.3 | 40 - 140 | 30 |
| PCB-1221 | ND | | | | | | | 40 - 140 | 30 |
| PCB-1232 | ND | | | | | | | 40 - 140 | 30 |

# QA/QC Data

SDG I.D.: GBH78392

| Parameter | Blank | LCS % | LCSD % | LCS RPD | MS % | MSD % | MS RPD | % Rec Limits | % RPD Limits |
|---|---|---|---|---|---|---|---|---|---|
| PCB-1242 | ND | | | | | | | 40 - 140 | 30 |
| PCB-1248 | ND | | | | | | | 40 - 140 | 30 |
| PCB-1254 | ND | | | | | | | 40 - 140 | 30 |
| PCB-1260 | ND | 99 | 99 | 0.0 | 96 | 95 | 1.0 | 40 - 140 | 30 |
| PCB-1262 | ND | | | | | | | 40 - 140 | 30 |
| PCB-1268 | ND | | | | | | | 40 - 140 | 30 |
| % DCBP (Surrogate Rec) | 83 | 103 | 102 | 1.0 | 99 | 97 | 2.0 | 30 - 150 | 30 |
| % TCMX (Surrogate Rec) | 69 | 102 | 102 | 0.0 | 94 | 92 | 2.2 | 30 - 150 | 30 |
| QA/QC Batch 300647, QC Sample No: BH78392 (BH78392, BH78393) | | | | | | | | | |
| **Gasoline Range Organics (C6C10) - Solid** | | | | | | | | | |
| Gasoline Range Organics (C6-C10) | ND | 74 | 76 | 2.7 | | | | 60 - 120 | 30 |
| QA/QC Batch 300661, QC Sample No: BH78392 (BH78392, BH78393) | | | | | | | | | |
| **Pesticides** | | | | | | | | | |
| 4,4' -DDD | ND | 78 | 84 | 7.4 | | | | 40 - 140 | 20 |
| 4,4' -DDE | ND | 81 | 93 | 13.8 | | | | 40 - 140 | 20 |
| 4,4' -DDT | ND | 82 | 83 | 1.2 | | | | 40 - 140 | 20 |
| a-BHC | ND | 77 | 84 | 8.7 | | | | 40 - 140 | 20 |
| a-Chlordane | ND | 87 | 84 | 3.5 | | | | 40 - 140 | 20 |
| Alachlor | ND | NA | NA | NC | | | | 40 - 140 | 20 |
| Aldrin | ND | 70 | 72 | 2.8 | | | | 40 - 140 | 20 |
| b-BHC | ND | 82 | 87 | 5.9 | | | | 40 - 140 | 20 |
| Chlordane | ND | 81 | 85 | 4.8 | | | | 40 - 140 | 20 |
| d-BHC | ND | 70 | 73 | 4.2 | | | | 40 - 140 | 20 |
| Dieldrin | ND | 88 | 97 | 9.7 | | | | 40 - 140 | 20 |
| Endosulfan I | ND | 82 | 86 | 4.8 | | | | 40 - 140 | 20 |
| Endosulfan II | ND | 84 | 88 | 4.7 | | | | 40 - 140 | 20 |
| Endosulfan sulfate | ND | 80 | 83 | 3.7 | | | | 40 - 140 | 20 |
| Endrin | ND | 80 | 86 | 7.2 | | | | 40 - 140 | 20 |
| Endrin aldehyde | ND | 100 | 103 | 3.0 | | | | 40 - 140 | 20 |
| g-BHC | ND | 82 | 87 | 5.9 | | | | 40 - 140 | 20 |
| g-Chlordane | ND | 81 | 85 | 4.8 | | | | 40 - 140 | 20 |
| Heptachlor | ND | 73 | 77 | 5.3 | | | | 40 - 140 | 20 |
| Heptachlor epoxide | ND | 82 | 86 | 4.8 | | | | 40 - 140 | 20 |
| Methoxychlor | ND | 76 | 78 | 2.6 | | | | 40 - 140 | 20 |
| Toxaphene | ND | NA | NA | NC | | | | 40 - 140 | 20 |
| % DCBP | 76 | 75 | 71 | 5.5 | | | | 40 - 150 | 20 |
| % TCMX | 73 | 69 | 77 | 11.0 | | | | 40 - 150 | 20 |
| QA/QC Batch 300767, QC Sample No: BH78392 (BH78393 (5X) ) | | | | | | | | | |
| **Volatiles - TCLP** | | | | | | | | | |
| 1,1-Dichloroethene | ND | 92 | 97 | 5.3 | 92 | 89 | 3.3 | 70 - 130 | 30 |
| 1,2-Dichloroethane | ND | 90 | 94 | 4.3 | 93 | 91 | 2.2 | 70 - 130 | 30 |
| Benzene | ND | 94 | 99 | 5.2 | 96 | 94 | 2.1 | 70 - 130 | 30 |
| Carbon tetrachloride | ND | 92 | 97 | 5.3 | 90 | 89 | 1.1 | 70 - 130 | 30 |
| Chlorobenzene | ND | 100 | 105 | 4.9 | 104 | 100 | 3.9 | 70 - 130 | 30 |
| Chloroform | ND | 93 | 97 | 4.2 | 96 | 93 | 3.2 | 70 - 130 | 30 |
| Methyl ethyl ketone | ND | 88 | 91 | 3.4 | 96 | 93 | 3.2 | 70 - 130 | 30 |
| Tetrachloroethene | ND | 103 | 109 | 5.7 | 103 | 99 | 4.0 | 70 - 130 | 30 |
| Trichloroethene | ND | 94 | 99 | 5.2 | 97 | 94 | 3.1 | 70 - 130 | 30 |
| Vinyl chloride | ND | 86 | 92 | 6.7 | 91 | 91 | 0.0 | 70 - 130 | 30 |
| % 1,2-dichlorobenzene-d4 | 97 | 96 | 99 | 3.1 | 98 | 100 | 2.0 | 70 - 130 | 30 |
| % Bromofluorobenzene | 95 | 95 | 96 | 1.0 | 96 | 95 | 1.0 | 70 - 130 | 30 |

# QA/QC Data

SDG I.D.: GBH78392

| Parameter | Blank | LCS % | LCSD % | LCS RPD | MS % | MSD % | MS RPD | % Rec Limits | % RPD Limits | |
|---|---|---|---|---|---|---|---|---|---|---|
| % Dibromofluoromethane | 98 | 101 | 99 | 2.0 | 100 | 101 | 1.0 | 70 - 130 | 30 | |
| % Toluene-d8 | 99 | 98 | 99 | 1.0 | 99 | 98 | 1.0 | 70 - 130 | 30 | |

**Comment:**

Additional 8260 criteria: 10% of LCS/LCSD compounds can be outside of acceptance criteria as long as recovery is 40-160%.

QA/QC Batch 300840, QC Sample No: BH78836 (BH78392, BH78393 (1X, 50X) )

## Volatiles (TCL) - Solid

| | | | | | | | | | | |
|---|---|---|---|---|---|---|---|---|---|---|
| 1,1,1-Trichloroethane | ND | 102 | 111 | 8.5 | 112 | 103 | 8.4 | 70 - 130 | 30 | |
| 1,1,2,2-Tetrachloroethane | ND | 116 | 124 | 6.7 | 136 | 108 | 23.0 | 70 - 130 | 30 | m |
| 1,1,2-Trichloroethane | ND | 97 | 105 | 7.9 | 106 | 94 | 12.0 | 70 - 130 | 30 | |
| 1,1-Dichloroethane | ND | 105 | 112 | 6.5 | 114 | 105 | 8.2 | 70 - 130 | 30 | |
| 1,1-Dichloroethene | ND | 105 | 114 | 8.2 | 114 | 101 | 12.1 | 70 - 130 | 30 | |
| 1,2,3-Trichlorobenzene | ND | 100 | 110 | 9.5 | 94 | 77 | 19.9 | 70 - 130 | 30 | |
| 1,2,4-Trichlorobenzene | ND | 98 | 109 | 10.6 | 95 | 77 | 20.9 | 70 - 130 | 30 | |
| 1,2-Dibromo-3-chloropropane | ND | 105 | 113 | 7.3 | 123 | 95 | 25.7 | 70 - 130 | 30 | |
| 1,2-Dibromoethane | ND | 98 | 106 | 7.8 | 105 | 94 | 11.1 | 70 - 130 | 30 | |
| 1,2-Dichlorobenzene | ND | 102 | 112 | 9.3 | 111 | 91 | 19.8 | 70 - 130 | 30 | |
| 1,2-Dichloroethane | ND | 97 | 105 | 7.9 | 103 | 93 | 10.2 | 70 - 130 | 30 | |
| 1,2-Dichloropropane | ND | 104 | 112 | 7.4 | 111 | 103 | 7.5 | 70 - 130 | 30 | |
| 1,3-Dichlorobenzene | ND | 100 | 112 | 11.3 | 112 | 93 | 18.5 | 70 - 130 | 30 | |
| 1,4-Dichlorobenzene | ND | 106 | 118 | 10.7 | 119 | 97 | 20.4 | 70 - 130 | 30 | |
| 2-Hexanone | ND | 96 | 105 | 9.0 | 104 | 85 | 20.1 | 70 - 130 | 30 | |
| 4-Methyl-2-pentanone | ND | 99 | 105 | 5.9 | 105 | 90 | 15.4 | 70 - 130 | 30 | |
| Acetone | ND | 101 | 106 | 4.8 | 87 | 73 | 17.5 | 70 - 130 | 30 | |
| Benzene | ND | 103 | 111 | 7.5 | 111 | 101 | 9.4 | 70 - 130 | 30 | |
| Bromochloromethane | ND | 104 | 114 | 9.2 | 110 | 98 | 11.5 | 70 - 130 | 30 | |
| Bromodichloromethane | ND | 105 | 112 | 6.5 | 107 | 97 | 9.8 | 70 - 130 | 30 | |
| Bromoform | ND | 98 | 109 | 10.6 | 104 | 92 | 12.2 | 70 - 130 | 30 | |
| Bromomethane | ND | 94 | 106 | 12.0 | 106 | 96 | 9.9 | 70 - 130 | 30 | |
| Carbon Disulfide | ND | 123 | 134 | 8.6 | 116 | 106 | 9.0 | 70 - 130 | 30 | l |
| Carbon tetrachloride | ND | 100 | 108 | 7.7 | 106 | 99 | 6.8 | 70 - 130 | 30 | |
| Chlorobenzene | ND | 102 | 112 | 9.3 | 112 | 100 | 11.3 | 70 - 130 | 30 | |
| Chloroethane | ND | 94 | 100 | 6.2 | 109 | 101 | 7.6 | 70 - 130 | 30 | |
| Chloroform | ND | 102 | 111 | 8.5 | 111 | 101 | 9.4 | 70 - 130 | 30 | |
| Chloromethane | ND | 107 | 113 | 5.5 | 119 | 108 | 9.7 | 70 - 130 | 30 | |
| cis-1,2-Dichloroethene | ND | 107 | 114 | 6.3 | 113 | 102 | 10.2 | 70 - 130 | 30 | |
| cis-1,3-Dichloropropene | ND | 107 | 117 | 8.9 | 108 | 98 | 9.7 | 70 - 130 | 30 | |
| Cyclohexane | ND | 97 | 103 | 6.0 | 119 | 109 | 8.8 | 70 - 130 | 30 | |
| Dibromochloromethane | ND | 105 | 113 | 7.3 | 110 | 97 | 12.6 | 70 - 130 | 30 | |
| Dichlorodifluoromethane | ND | 107 | 116 | 8.1 | 117 | 108 | 8.0 | 70 - 130 | 30 | |
| Ethylbenzene | ND | 105 | 116 | 10.0 | 118 | 104 | 12.6 | 70 - 130 | 30 | |
| Isopropylbenzene | ND | 103 | 113 | 9.3 | 128 | 106 | 18.8 | 70 - 130 | 30 | |
| m&p-Xylene | ND | 103 | 113 | 9.3 | 116 | 102 | 12.8 | 70 - 130 | 30 | |
| Methyl ethyl ketone | ND | 94 | 98 | 4.2 | 97 | 82 | 16.8 | 70 - 130 | 30 | |
| Methyl t-butyl ether (MTBE) | ND | 98 | 106 | 7.8 | 101 | 92 | 9.3 | 70 - 130 | 30 | |
| Methylacetate | ND | 100 | 109 | 8.6 | 92 | 78 | 16.5 | 70 - 130 | 30 | |
| Methylcyclohexane | ND | 93 | 100 | 7.3 | 112 | 101 | 10.3 | 70 - 130 | 30 | |
| Methylene chloride | ND | 101 | 108 | 6.7 | 99 | 91 | 8.4 | 70 - 130 | 30 | |
| o-Xylene | ND | 105 | 115 | 9.1 | 116 | 103 | 11.9 | 70 - 130 | 30 | |
| Styrene | ND | 105 | 115 | 9.1 | 111 | 99 | 11.4 | 70 - 130 | 30 | |
| Tetrachloroethene | ND | 100 | 112 | 11.3 | 115 | 102 | 12.0 | 70 - 130 | 30 | |
| Toluene | ND | 101 | 109 | 7.6 | 109 | 100 | 8.6 | 70 - 130 | 30 | |
| trans-1,2-Dichloroethene | ND | 108 | 118 | 8.8 | 114 | 105 | 8.2 | 70 - 130 | 30 | |

# QA/QC Data

SDG I.D.: GBH78392

| Parameter | Blank | LCS % | LCSD % | LCS RPD | MS % | MSD % | MS RPD | % Rec Limits | % RPD Limits |
|---|---|---|---|---|---|---|---|---|---|
| trans-1,3-Dichloropropene | ND | 108 | 117 | 8.0 | 106 | 97 | 8.9 | 70 - 130 | 30 |
| Trichloroethene | ND | 99 | 106 | 6.8 | 107 | 97 | 9.8 | 70 - 130 | 30 |
| Trichlorofluoromethane | ND | 100 | 110 | 9.5 | 111 | 102 | 8.5 | 70 - 130 | 30 |
| Trichlorotrifluoroethane | ND | 104 | 112 | 7.4 | 114 | 104 | 9.2 | 70 - 130 | 30 |
| Vinyl chloride | ND | 102 | 110 | 7.5 | 119 | 110 | 7.9 | 70 - 130 | 30 |
| % 1,2-dichlorobenzene-d4 | 102 | 101 | 100 | 1.0 | 100 | 99 | 1.0 | 70 - 130 | 30 |
| % Bromofluorobenzene | 96 | 100 | 100 | 0.0 | 98 | 99 | 1.0 | 70 - 130 | 30 |
| % Dibromofluoromethane | 100 | 103 | 101 | 2.0 | 99 | 98 | 1.0 | 70 - 130 | 30 |
| % Toluene-d8 | 95 | 101 | 100 | 1.0 | 99 | 100 | 1.0 | 70 - 130 | 30 |

**Comment:**

Additional 8260 criteria: 10% of LCS/LCSD compounds can be outside of acceptance criteria as long as recovery is 40-160%.

l = This parameter is outside laboratory lcs/lcsd specified recovery limits.
m = This parameter is outside laboratory ms/msd specified recovery limits.

**If there are any questions regarding this data, please call Phoenix Client Services at extension 200.**

RPD - Relative Percent Difference
LCS - Laboratory Control Sample
LCSD - Laboratory Control Sample Duplicate
MS - Matrix Spike
MS Dup - Matrix Spike Duplicate
NC - No Criteria
Intf - Interference

Phyllis Shiller, Laboratory Director
March 09, 2015

Monday, March 09, 2015

Criteria: NJ: RC; NY: 375RS

State: NY

# Sample Criteria Exceedences Report

## GBH78392 - HESNY-TUCK

| SampNo | Acode | Phoenix Analyte | Criteria | Result | RL | Criteria | RL Criteria | Analysis Units |
|---|---|---|---|---|---|---|---|---|
| BH78392 | $8270_TCLR | Dibenz(a,h)anthracene | NJ / Soil Remediation Standard / Res. Direct Contact | ND | 2500 | 200 | 200 | ug/Kg |
| BH78392 | $8270_TCLR | 2,6-Dinitrotoluene | NJ / Soil Remediation Standard / Res. Direct Contact | ND | 2500 | 700 | 200 | ug/Kg |
| BH78392 | $8270_TCLR | 3,3'-Dichlorobenzidine | NJ / Soil Remediation Standard / Res. Direct Contact | ND | 4300 | 1000 | 200 | ug/Kg |
| BH78392 | $8270_TCLR | 4,6-Dinitro-2-methylphenol | NJ / Soil Remediation Standard / Res. Direct Contact | ND | 10000 | 6000 | 300 | ug/Kg |
| BH78392 | $8270_TCLR | Acetophenone | NJ / Soil Remediation Standard / Res. Direct Contact | ND | 2500 | 2000 | 200 | ug/Kg |
| BH78392 | $8270_TCLR | Benz(a)anthracene | NJ / Soil Remediation Standard / Res. Direct Contact | ND | 2500 | 600 | 200 | ug/Kg |
| BH78392 | $8270_TCLR | Benzo(a)pyrene | NJ / Soil Remediation Standard / Res. Direct Contact | ND | 2500 | 200 | 200 | ug/Kg |
| BH78392 | $8270_TCLR | Benzo(b)fluoranthene | NJ / Soil Remediation Standard / Res. Direct Contact | 3000 | 2500 | 600 | 200 | ug/Kg |
| BH78392 | $8270_TCLR | 2,4-Dinitrotoluene | NJ / Soil Remediation Standard / Res. Direct Contact | ND | 2500 | 700 | 200 | ug/Kg |
| BH78392 | $8270_TCLR | Bis(2-chloroethyl)ether | NJ / Soil Remediation Standard / Res. Direct Contact | ND | 3600 | 400 | 200 | ug/Kg |
| BH78392 | $8270_TCLR | Hexachlorobenzene | NJ / Soil Remediation Standard / Res. Direct Contact | ND | 2500 | 300 | 200 | ug/Kg |
| BH78392 | $8270_TCLR | N-Nitrosodi-n-propylamine | NJ / Soil Remediation Standard / Res. Direct Contact | ND | 2500 | 200 | 200 | ug/Kg |
| BH78392 | $8270_TCLR | Pentachlorophenol | NJ / Soil Remediation Standard / Res. Direct Contact | ND | 3600 | 3000 | 300 | ug/Kg |
| BH78392 | $8270_TCLR | Indeno(1,2,3-cd)pyrene | NJ / Soil Remediation Standard / Res. Direct Contact | ND | 2500 | 600 | 200 | ug/Kg |
| BH78392 | $8270_TCLR | N-Nitrosodimethylamine | NJ / Soil Remediation Standard / Res. Direct Contact | ND | 3600 | 700 | 700 | ug/Kg |
| BH78392 | $8270_TCLR | Indeno(1,2,3-cd)pyrene | NY / 375-6.8 Semivolatiles / Residential | ND | 2500 | 500 | 500 | ug/Kg |
| BH78392 | $8270_TCLR | Benzo(k)fluoranthene | NY / 375-6.8 Semivolatiles / Residential | ND | 2500 | 1000 | 1000 | ug/Kg |
| BH78392 | $8270_TCLR | Benzo(b)fluoranthene | NY / 375-6.8 Semivolatiles / Residential | 3000 | 2500 | 1000 | 1000 | ug/Kg |
| BH78392 | $8270_TCLR | Dibenz(a,h)anthracene | NY / 375-6.8 Semivolatiles / Residential | ND | 2500 | 330 | 330 | ug/Kg |
| BH78392 | $8270_TCLR | Chrysene | NY / 375-6.8 Semivolatiles / Residential | 2600 | 2500 | 1000 | 1000 | ug/Kg |
| BH78392 | $8270_TCLR | Benz(a)anthracene | NY / 375-6.8 Semivolatiles / Residential | ND | 2500 | 1000 | 1000 | ug/Kg |
| BH78392 | $8270_TCLR | Pentachlorophenol | NY / 375-6.8 Semivolatiles / Residential | ND | 3600 | 2400 | 2400 | ug/Kg |
| BH78392 | $8270_TCLR | Benzo(a)pyrene | NY / 375-6.8 Semivolatiles / Residential | ND | 2500 | 1000 | 1000 | ug/Kg |
| BH78393 | $8270_TCLR | N-Nitrosodi-n-propylamine | NJ / Soil Remediation Standard / Res. Direct Contact | ND | 270 | 200 | 200 | ug/Kg |
| BH78393 | $8270_TCLR | Benz(a)anthracene | NJ / Soil Remediation Standard / Res. Direct Contact | 630 | 270 | 600 | 200 | ug/Kg |
| BH78393 | $8270_TCLR | Benzo(a)pyrene | NJ / Soil Remediation Standard / Res. Direct Contact | 580 | 270 | 200 | 200 | ug/Kg |
| BH78393 | $8270_TCLR | Benzo(b)fluoranthene | NJ / Soil Remediation Standard / Res. Direct Contact | 710 | 270 | 600 | 200 | ug/Kg |
| BH78393 | $8270_TCLR | Dibenz(a,h)anthracene | NJ / Soil Remediation Standard / Res. Direct Contact | ND | 270 | 200 | 200 | ug/Kg |

Phoenix Laboratories does not assume responsibility for the data contained in this report. It is provided as an additional tool to identify requested criteria exceedences. All efforts are made to ensure the accuracy of the data (obtained from appropriate agencies). A lack of exceedence information does not necessarily suggest conformance to the criteria. It is ultimately the site professional's responsibility to determine appropriate compliance.

**Environmental Laboratories, Inc.**
**587 East Middle Turnpike, P.O.Box 370, Manchester, CT 06045**
**Tel. (860) 645-1102 Fax (860) 645-0823**

# NY Temperature Narration

**March 09, 2015**

**SDG I.D.: GBH78392**

The samples in this delivery group were received at 4°C.
(Note acceptance criteria is above freezing up to 6°C)

**PHOENIX Environmental Laboratories, Inc.**

# NY/NJ CHAIN OF CUSTODY RECORD

587 East Middle Turnpike, P.O. Box 370, Manchester, CT 06040
Email: info@phoenixlabs.com Fax (860) 645-0823
**Client Services (860) 645-8726**

Temp 4 [illegible] °C

**Data Delivery:**
☐ Fax #:
☒ Email: info@hesny.com

| | | | |
|---|---|---|---|
| Customer: | | Project: 109 Marbledale Rd, Tuckahoe NY | Project P.O: |
| Address: | HYDROENVIRONMENTAL SOLUTIONS<br>ONE DEANS BRIDGE ROAD<br>SOMERS, NEW YORK 10589 | Report to: Tim Carr | Phone #: 914-276-2560 |
| | | Invoice to: → | Fax #: 914-276-2664 |

**Client Sample - Information - Identification**

Sampler's Signature: R Gaffer Date: 2/27/15

Analysis Request: See Attached

**Matrix Code:**
DW=drinking water WW=wastewater S=soil/solid O=oil
GW=groundwater SL=sludge A=air X=other

| Phoenix Sample # | Customer Sample Identification | Sample Matrix | Date Sampled | Time Sampled | 5g EnCore | Soil VOA [ ] Methanol [ ] S. Bisulfate [ ] H2O | GL Soil container ( 8 ) oz | GL Soil container ( 4 ) oz | 40 ml VOA Vial [ ] As is [ ] HCl | GL Amber 1000ml [ ] As is [ ] H2SO4 | PL As is [ ] 250ml [ ] 500ml [ ] 1000ml | PL H2SO4 [ ] 250ml [ ] 500ml | PL HNO3 250ml | PL NaOH 250ml | Bacteria Bottle |
|---|---|---|---|---|---|---|---|---|---|---|---|---|---|---|---|
| 78392 | TB-11 | S | 2/27/15 | | 3 | | | 2 | 1 | | | | | | |
| 78393 | TB-13 | S | 2/26/15 | | 1 | | | 1 | 1 | | | | | | |

| Relinquished by: | Accepted by: | Date: | Time: |
|---|---|---|---|
| [signature] | [signature] | 3-2-15 | 12:10 |
| [signature] | [signature] | 3/2/15 | 15:48 |

**Comments, Special Requirements or Regulations:**
Running attached CleanEarth Protocol (13 tests) on both samples

**Turnaround:**
☐ 1 Day*
☐ 2 Days*
☐ 3 Days*
☒ Standard
☐ Other
* SURCHARGE APPLIES

**NJ**
☒ Res. Criteria
☐ Non-Res. Criteria
☐ Impact to GW Soil Cleanup Criteria
☐ GW Criteria

**NY**
☐ TAGM 4046 GW
☐ TAGM 4046 SOIL
☐ NY375 Unrestricted Soil
☒ NY375 Residential Soil
☐ NY375 Restricted Non-Residential Soil

**Data Format**
☐ Phoenix Std Report
☐ Excel
☒ PDF
☐ GIS/Key
☐ EQuIS
☐ NJ Hazsite EDD
☐ NY EZ EDD (ASP)
☐ Other

**Data Package**
☐ NJ Reduced Deliv. *
☐ NY Enhanced (ASP B) *
☐ Other

**State where samples were collected:** NY

# Clean Earth Sampling Protocol
## Hybrid

| PARAMETERS | | TOTAL PETROLEUM HYDROCARBONS (TPHC): GRO & DRO - Expanded to C44 (GRAB SAMPLE) | EPH (Extractable Petroleum Hydrocarbon) | TOTAL VOLATILE ORGANICS (TCL+10 & 20 & NJDEP SCC List + NJDEP SRS List) | TOTAL SEMIVOLATILE ORGANICS (TCL + NJDEP SCC List + NJDEP SRS List) | Total Pesticides (TCL + NJDEP SRS List) | TAL Metals & Hexavalent Chromium and Mercury | TCLP METALS RCRA + Cu, Ni, Zn | IGNITABILITY | CORROSIVITY (PH) | REACTIVITY - SULFIDE AND CYANIDE | PCBs | TCLP VOLATILE ORGANICS (GRAB SAMPLE) | TCLP SEMI VOLATILE ORGANICS | TCLP HERBICIDES | TCLP PESTICIDES |
|---|---|---|---|---|---|---|---|---|---|---|---|---|---|---|---|---|
| **METHODS** | | 8015M (expanded to C44) | Extractable Petroleum Hydrocarbon /EPH | 8260B - with EnCore sampling devices | 8270D | 8081A/ 8151A | 6000/ 7000 | 1311/6010 | 1010A | 9040C | SW846 CHAPTER 7.3 | 8082A | 1311/ 8260B | 1311/ 8270D | 1311/ 8151A | 1311/ 8081B |
| | **FREQUENCY** | | | | | | | | | | | | | | | |
| **HISTORIC FILL/ CONSTRUCTION FILL** | Grab Sample Every 250 tons | x | | | | | | | | | | | | | | |
| | Grab - every 1000 tons | | | x | | | | | | | | | | | | |
| | 5 point composite - every 1000 tons | | | | x | x | x | x | x | x | x | x | | x | x | x |

(1) The methods provided are standard EPA methods. The method revisions are subject to change and the most current method should always be utilized by the laboratory.

This is to be used as a guideline for sampling. Sampling frequencies and parameter requirements may be modified at the discretion of the CE Approval staff based items such as site history, levels of contamination and/or source of contamination, etc.

Protocol for sampling requires the screening of each of the five (5) grab samples with a PID. The highest PID grab sample for every 1,000 tons is to be submitted for the VOC portion of the testing utilizing an ENCORE sampling device. The five (5) grab samples are then to be composited for every 1,000 tons and submitted for the remaining parameters.

**In addition, Clean Earth of Carteret requires 1 EPH analysis every 100 cy, which can be analyzed from incoming loads.**
**CEP facility requires 1 grab sample every 250 tons to be analyzed for TPH-DRO/GRO-Extended to C44, which can be analyzed once need arises.**
**CE requests that enough grabs for TPHs are collected and put on hold for further analysis as needed.**

10/28/2013

PHOENIX
Environmental Laboratories, Inc.

Monday, March 16, 2015

Attn: Mr. Tim Carr
HydroEnvironmental Solutions, Inc.
One Deans Bridge Rd
Somers NY 10589

Project ID: 109 MARBLEDALE RD., TUCKAHOE, NY
Sample ID#s: BH79483 - BH79489

This laboratory is in compliance with the NELAC requirements of procedures used except where indicated.

This report contains results for the parameters tested, under the sampling conditions described on the Chain Of Custody, as received by the laboratory.

All soils, solids and sludges are reported on a dry weight basis unless otherwise noted in the sample comments.

A scanned version of the COC form accompanies the analytical report and is an exact duplicate of the original.

If you have any questions concerning this testing, please do not hesitate to contact Phoenix Client Services at ext. 200.

Sincerely yours,

Phyllis Shiller
Laboratory Director

NELAC - #NY11301
CT Lab Registration #PH-0618
MA Lab Registration #MA-CT-007
ME Lab Registration #CT-007
NH Lab Registration #213693-A,B
NJ Lab Registration #CT-003
NY Lab Registration #11301
PA Lab Registration #68-03530
RI Lab Registration #63
VT Lab Registration #VT11301

587 East Middle Turnpike, P.O. Box 370, Manchester, CT 06040
Telephone (860) 645-1102 Fax (860) 645-0823

PHOENIX

Environmental Laboratories, Inc.
587 East Middle Turnpike, P.O.Box 370, Manchester, CT 06045
Tel. (860) 645-1102 Fax (860) 645-0823

ACCREDITED IN ACCORDANCE WITH nelac
NY # 11301

# SDG Comments

March 16, 2015

SDG I.D.: GBH79483

---

Please be advised that the NY 375 soil criteria for chromium are based on hexavalent chromium and trivalent chromium.

PHOENIX

Environmental Laboratories, Inc.
587 East Middle Turnpike, P.O.Box 370, Manchester, CT 06045
Tel. (860) 645-1102 Fax (860) 645-0823

ACCREDITED IN ACCORDANCE WITH nelac NY # 11301

# Analysis Report

March 16, 2015

FOR: Attn: Mr. Tim Carr
HydroEnvironmental Solutions, Inc.
One Deans Bridge Rd
Somers NY 10589

| Sample Information | | Custody Information | | Date | Time |
|---|---|---|---|---|---|
| Matrix: | SOIL | Collected by: | | 03/03/15 | 11:00 |
| Location Code: | HESNY-TUCK | Received by: | LB | 03/04/15 | 16:20 |
| Rush Request: | 72 Hour | Analyzed by: | see "By" below | | |
| P.O.#: | | | | | |

## Laboratory Data

SDG ID: GBH79483
Phoenix ID: BH79483

Project ID: 109 MARBLEDALE RD., TUCKAHOE, NY
Client ID: TB-3 (2-4)

| Parameter | Result | RL/ PQL | Units | Date/Time | By | Reference |
|---|---|---|---|---|---|---|
| Silver | < 0.37 | 0.37 | mg/Kg | 03/05/15 | LK | SW6010C |
| Aluminum | 15000 | 56 | mg/Kg | 03/05/15 | LK | SW6010C |
| Arsenic | 4.3 | 0.7 | mg/Kg | 03/05/15 | LK | SW6010C |
| Barium | 155 | 0.37 | mg/Kg | 03/05/15 | LK | SW6010C |
| Beryllium | 0.46 | 0.30 | mg/Kg | 03/05/15 | LK | SW6010C |
| Calcium | 13100 | 56 | mg/Kg | 03/05/15 | LK | SW6010C |
| Cadmium | < 0.37 | 0.37 | mg/Kg | 03/05/15 | LK | SW6010C |
| Cobalt | 12.9 | 0.37 | mg/Kg | 03/05/15 | LK | SW6010C |
| Chromium | 43.1 | 0.37 | mg/Kg | 03/05/15 | LK | SW6010C |
| Copper | 34.1 | 0.37 | mg/kg | 03/05/15 | LK | SW6010C |
| Iron | 24300 | 56 | mg/Kg | 03/05/15 | LK | SW6010C |
| Mercury | 0.06 | 0.03 | mg/Kg | 03/05/15 | MA | SW7471B |
| Potassium | 2360 | 5.6 | mg/Kg | 03/05/15 | LK | SW6010C |
| Magnesium | 9350 | 56 | mg/Kg | 03/05/15 | LK | SW6010C |
| Manganese | 404 | 3.7 | mg/Kg | 03/05/15 | LK | SW6010C |
| Sodium | 158 | 5.6 | mg/Kg | 03/05/15 | LK | SW6010C |
| Nickel | 28.1 | 0.37 | mg/Kg | 03/05/15 | LK | SW6010C |
| Lead | 180 | 3.7 | mg/Kg | 03/05/15 | LK | SW6010C |
| Antimony | < 3.7 | 3.7 | mg/Kg | 03/05/15 | LK | SW6010C |
| Selenium | < 1.5 | 1.5 | mg/Kg | 03/05/15 | LK | SW6010C |
| Thallium | < 3.3 | 3.3 | mg/Kg | 03/05/15 | LK | SW6010C |
| Vanadium | 62.5 | 0.37 | mg/Kg | 03/05/15 | LK | SW6010C |
| Zinc | 258 | 3.7 | mg/Kg | 03/05/15 | LK | SW6010C |
| Percent Solid | 82 | | % | 03/04/15 | I | SW846-%Solid |
| Total Cyanide | < 0.55 | 0.55 | mg/Kg | 03/04/15 | O/B/E | SW9012B |
| Soil Extraction for PCB | Completed | | | 03/04/15 | CC/H | SW3545A |
| Soil Extraction for SVOA | Completed | | | 03/04/15 | JJ/VH | SW3545A |
| Mercury Digestion | Completed | | | 03/05/15 | I/I | SW7471B |

Project ID: 109 MARBLEDALE RD., TUCKAHOE, NY
Client ID: TB-3 (2-4)

Phoenix I.D.: BH79483

| Parameter | Result | RL/ PQL | Units | Date/Time | By | Reference |
|---|---|---|---|---|---|---|
| Total Metals Digest | Completed | | | 03/04/15 | CB/AG | SW3050B |
| **Polychlorinated Biphenyls** | | | | | | |
| PCB-1016 | ND | 79 | ug/Kg | 03/05/15 | KCA | SW8082A |
| PCB-1221 | ND | 79 | ug/Kg | 03/05/15 | KCA | SW8082A |
| PCB-1232 | ND | 79 | ug/Kg | 03/05/15 | KCA | SW8082A |
| PCB-1242 | ND | 79 | ug/Kg | 03/05/15 | KCA | SW8082A |
| PCB-1248 | ND | 79 | ug/Kg | 03/05/15 | KCA | SW8082A |
| PCB-1254 | ND | 79 | ug/Kg | 03/05/15 | KCA | SW8082A |
| PCB-1260 | ND | 79 | ug/Kg | 03/05/15 | KCA | SW8082A |
| PCB-1262 | ND | 79 | ug/Kg | 03/05/15 | KCA | SW8082A |
| PCB-1268 | ND | 79 | ug/Kg | 03/05/15 | KCA | SW8082A |
| **QA/QC Surrogates** | | | | | | |
| % DCBP | 91 | | % | 03/05/15 | KCA | 30 - 150 % |
| % TCMX | 66 | | % | 03/05/15 | KCA | 30 - 150 % |
| **Volatiles (TCL)** | | | | | | |
| 1,1,1-Trichloroethane | ND | 8.1 | ug/kg | 03/05/15 | JLI | SW8260C |
| 1,1,2,2-Tetrachloroethane | ND | 8.1 | ug/kg | 03/05/15 | JLI | SW8260C |
| 1,1,2-Trichloroethane | ND | 8.1 | ug/kg | 03/05/15 | JLI | SW8260C |
| 1,1-Dichloroethane | ND | 8.1 | ug/kg | 03/05/15 | JLI | SW8260C |
| 1,1-Dichloroethene | ND | 8.1 | ug/kg | 03/05/15 | JLI | SW8260C |
| 1,2,3-Trichlorobenzene | ND | 360 | ug/kg | 03/05/15 | JLI | SW8260C |
| 1,2,4-Trichlorobenzene | ND | 360 | ug/kg | 03/05/15 | JLI | SW8260C |
| 1,2-Dibromo-3-chloropropane | ND | 360 | ug/kg | 03/05/15 | JLI | SW8260C |
| 1,2-Dibromoethane | ND | 8.1 | ug/kg | 03/05/15 | JLI | SW8260C |
| 1,2-Dichlorobenzene | ND | 360 | ug/kg | 03/05/15 | JLI | SW8260C |
| 1,2-Dichloroethane | ND | 8.1 | ug/kg | 03/05/15 | JLI | SW8260C |
| 1,2-Dichloropropane | ND | 8.1 | ug/kg | 03/05/15 | JLI | SW8260C |
| 1,3-Dichlorobenzene | ND | 360 | ug/kg | 03/05/15 | JLI | SW8260C |
| 1,4-Dichlorobenzene | ND | 360 | ug/kg | 03/05/15 | JLI | SW8260C |
| 2-Hexanone | ND | 41 | ug/kg | 03/05/15 | JLI | SW8260C |
| 4-Methyl-2-pentanone | ND | 41 | ug/kg | 03/05/15 | JLI | SW8260C |
| Acetone | 62 | 81 | ug/kg | 03/05/15 | JLI | SW8260C |
| Benzene | ND | 8.1 | ug/kg | 03/05/15 | JLI | SW8260C |
| Bromochloromethane | ND | 8.1 | ug/kg | 03/05/15 | JLI | SW8260C |
| Bromodichloromethane | ND | 8.1 | ug/kg | 03/05/15 | JLI | SW8260C |
| Bromoform | ND | 8.1 | ug/kg | 03/05/15 | JLI | SW8260C |
| Bromomethane | ND | 8.1 | ug/kg | 03/05/15 | JLI | SW8260C |
| Carbon Disulfide | ND | 8.1 | ug/kg | 03/05/15 | JLI | SW8260C |
| Carbon tetrachloride | ND | 8.1 | ug/kg | 03/05/15 | JLI | SW8260C |
| Chlorobenzene | ND | 20 | ug/kg | 03/05/15 | JLI | SW8260C |
| Chloroethane | ND | 8.1 | ug/kg | 03/05/15 | JLI | SW8260C |
| Chloroform | ND | 8.1 | ug/kg | 03/05/15 | JLI | SW8260C |
| Chloromethane | ND | 8.1 | ug/kg | 03/05/15 | JLI | SW8260C |
| cis-1,2-Dichloroethene | ND | 8.1 | ug/kg | 03/05/15 | JLI | SW8260C |
| cis-1,3-Dichloropropene | ND | 8.1 | ug/kg | 03/05/15 | JLI | SW8260C |
| Cyclohexane | ND | 8.1 | ug/kg | 03/05/15 | JLI | SW8260C |
| Dibromochloromethane | ND | 8.1 | ug/kg | 03/05/15 | JLI | SW8260C |
| Dichlorodifluoromethane | ND | 8.1 | ug/kg | 03/05/15 | JLI | SW8260C |

Project ID: 109 MARBLEDALE RD., TUCKAHOE, NY
Client ID: TB-3 (2-4)

Phoenix I.D.: BH79483

| Parameter | Result | RL/ PQL | Units | Date/Time | By | Reference |
|---|---|---|---|---|---|---|
| Ethylbenzene | ND | 8.1 | ug/kg | 03/05/15 | JLI | SW8260C |
| Isopropylbenzene | ND | 360 | ug/kg | 03/05/15 | JLI | SW8260C |
| m&p-Xylene | ND | 8.1 | ug/kg | 03/05/15 | JLI | SW8260C |
| Methyl ethyl ketone | ND | 49 | ug/kg | 03/05/15 | JLI | SW8260C |
| Methyl t-butyl ether (MTBE) | ND | 16 | ug/kg | 03/05/15 | JLI | SW8260C |
| Methylacetate | ND | 6.5 | ug/kg | 03/05/15 | JLI | SW8260C |
| Methylcyclohexane | ND | 8.1 | ug/kg | 03/05/15 | JLI | SW8260C |
| Methylene chloride | ND | 8.1 | ug/kg | 03/05/15 | JLI | SW8260C |
| o-Xylene | ND | 8.1 | ug/kg | 03/05/15 | JLI | SW8260C |
| Styrene | ND | 8.1 | ug/kg | 03/05/15 | JLI | SW8260C |
| Tetrachloroethene | ND | 8.1 | ug/kg | 03/05/15 | JLI | SW8260C |
| Toluene | ND | 8.1 | ug/kg | 03/05/15 | JLI | SW8260C |
| Total Xylenes | ND | 8.1 | ug/kg | 03/05/15 | JLI | SW8260C |
| trans-1,2-Dichloroethene | ND | 8.1 | ug/kg | 03/05/15 | JLI | SW8260C |
| trans-1,3-Dichloropropene | ND | 8.1 | ug/kg | 03/05/15 | JLI | SW8260C |
| Trichloroethene | ND | 8.1 | ug/kg | 03/05/15 | JLI | SW8260C |
| Trichlorofluoromethane | ND | 8.1 | ug/kg | 03/05/15 | JLI | SW8260C |
| Trichlorotrifluoroethane | ND | 8.1 | ug/kg | 03/05/15 | JLI | SW8260C |
| Vinyl chloride | ND | 8.1 | ug/kg | 03/05/15 | JLI | SW8260C |
| **QA/QC Surrogates** | | | | | | |
| % 1,2-dichlorobenzene-d4 | 98 | | % | 03/05/15 | JLI | 70 - 130 % |
| % Bromofluorobenzene | 90 | | % | 03/05/15 | JLI | 70 - 130 % |
| % Dibromofluoromethane | 99 | | % | 03/05/15 | JLI | 70 - 130 % |
| % Toluene-d8 | 96 | | % | 03/05/15 | JLI | 70 - 130 % |
| **1,4-dioxane** | | | | | | |
| 1,4-dioxane | ND | 96 | ug/kg | 03/05/15 | JLI | SW8260C |
| Volatile Library Search Top 10 | Completed | | | 03/05/15 | JLI | |
| **Semivolatiles** | | | | | | |
| 1,1-Biphenyl | ND | 560 | ug/Kg | 03/05/15 | DD | SW8270D |
| 1,2,4,5-Tetrachlorobenzene | ND | 560 | ug/Kg | 03/05/15 | DD | SW8270D |
| 2,3,4,6-tetrachlorophenol | ND | 560 | ug/Kg | 03/05/15 | DD | SW8270D |
| 2,4,5-Trichlorophenol | ND | 560 | ug/Kg | 03/05/15 | DD | SW8270D |
| 2,4,6-Trichlorophenol | ND | 560 | ug/Kg | 03/05/15 | DD | SW8270D |
| 2,4-Dichlorophenol | ND | 560 | ug/Kg | 03/05/15 | DD | SW8270D |
| 2,4-Dimethylphenol | ND | 560 | ug/Kg | 03/05/15 | DD | SW8270D |
| 2,4-Dinitrophenol | ND | 1300 | ug/Kg | 03/05/15 | DD | SW8270D |
| 2,4-Dinitrotoluene | ND | 560 | ug/Kg | 03/05/15 | DD | SW8270D |
| 2,6-Dinitrotoluene | ND | 560 | ug/Kg | 03/05/15 | DD | SW8270D |
| 2-Chloronaphthalene | ND | 560 | ug/Kg | 03/05/15 | DD | SW8270D |
| 2-Chlorophenol | ND | 560 | ug/Kg | 03/05/15 | DD | SW8270D |
| 2-Methylnaphthalene | 690 | 560 | ug/Kg | 03/05/15 | DD | SW8270D |
| 2-Methylphenol (o-cresol) | ND | 330 | ug/Kg | 03/05/15 | DD | SW8270D |
| 2-Nitroaniline | ND | 1300 | ug/Kg | 03/05/15 | DD | SW8270D |
| 2-Nitrophenol | ND | 560 | ug/Kg | 03/05/15 | DD | SW8270D |
| 3&4-Methylphenol (m&p-cresol) | ND | 800 | ug/Kg | 03/05/15 | DD | SW8270D 1 |
| 3,3'-Dichlorobenzidine | ND | 970 | ug/Kg | 03/05/15 | DD | SW8270D |
| 3-Nitroaniline | ND | 1300 | ug/Kg | 03/05/15 | DD | SW8270D |

Project ID: 109 MARBLEDALE RD., TUCKAHOE, NY
Client ID: TB-3 (2-4)

Phoenix I.D.: BH79483

| Parameter | Result | RL/ PQL | Units | Date/Time | By | Reference | |
|---|---|---|---|---|---|---|---|
| 4,6-Dinitro-2-methylphenol | ND | 2300 | ug/Kg | 03/05/15 | DD | SW8270D | |
| 4-Bromophenyl phenyl ether | ND | 800 | ug/Kg | 03/05/15 | DD | SW8270D | |
| 4-Chloro-3-methylphenol | ND | 560 | ug/Kg | 03/05/15 | DD | SW8270D | |
| 4-Chloroaniline | ND | 560 | ug/Kg | 03/05/15 | DD | SW8270D | |
| 4-Chlorophenyl phenyl ether | ND | 560 | ug/Kg | 03/05/15 | DD | SW8270D | |
| 4-Nitroaniline | ND | 1300 | ug/Kg | 03/05/15 | DD | SW8270D | |
| 4-Nitrophenol | ND | 2300 | ug/Kg | 03/05/15 | DD | SW8270D | |
| Acenaphthene | ND | 560 | ug/Kg | 03/05/15 | DD | SW8270D | |
| Acenaphthylene | 810 | 560 | ug/Kg | 03/05/15 | DD | SW8270D | |
| Acetophenone | ND | 560 | ug/Kg | 03/05/15 | DD | SW8270D | |
| Anthracene | 1500 | 560 | ug/Kg | 03/05/15 | DD | SW8270D | |
| Atrazine | ND | 560 | ug/Kg | 03/05/15 | DD | SW8270D | |
| Benz(a)anthracene | 5600 | 560 | ug/Kg | 03/05/15 | DD | SW8270D | |
| Benzaldehyde | ND | 560 | ug/Kg | 03/05/15 | DD | SW8270D | |
| Benzo(a)pyrene | 5800 | 560 | ug/Kg | 03/05/15 | DD | SW8270D | |
| Benzo(b)fluoranthene | 7700 | 560 | ug/Kg | 03/05/15 | DD | SW8270D | |
| Benzo(ghi)perylene | 2900 | 560 | ug/Kg | 03/05/15 | DD | SW8270D | |
| Benzo(k)fluoranthene | 2500 | 560 | ug/Kg | 03/05/15 | DD | SW8270D | |
| Benzyl butyl phthalate | ND | 560 | ug/Kg | 03/05/15 | DD | SW8270D | |
| Bis(2-chloroethoxy)methane | ND | 560 | ug/Kg | 03/05/15 | DD | SW8270D | |
| Bis(2-chloroethyl)ether | ND | 800 | ug/Kg | 03/05/15 | DD | SW8270D | |
| Bis(2-chloroisopropyl)ether | ND | 560 | ug/Kg | 03/05/15 | DD | SW8270D | 1 |
| Bis(2-ethylhexyl)phthalate | 780 | 560 | ug/Kg | 03/05/15 | DD | SW8270D | |
| Caprolactam | ND | 560 | ug/Kg | 03/05/15 | DD | SW8270D | |
| Carbazole | ND | 2300 | ug/Kg | 03/05/15 | DD | SW8270D | |
| Chrysene | 6000 | 560 | ug/Kg | 03/05/15 | DD | SW8270D | |
| Dibenz(a,h)anthracene | 790 | 560 | ug/Kg | 03/05/15 | DD | SW8270D | |
| Dibenzofuran | ND | 560 | ug/Kg | 03/05/15 | DD | SW8270D | |
| Diethyl phthalate | ND | 560 | ug/Kg | 03/05/15 | DD | SW8270D | |
| Dimethylphthalate | ND | 560 | ug/Kg | 03/05/15 | DD | SW8270D | |
| Di-n-butylphthalate | ND | 560 | ug/Kg | 03/05/15 | DD | SW8270D | |
| Di-n-octylphthalate | ND | 560 | ug/Kg | 03/05/15 | DD | SW8270D | |
| Fluoranthene | 7100 | 560 | ug/Kg | 03/05/15 | DD | SW8270D | |
| Fluorene | ND | 560 | ug/Kg | 03/05/15 | DD | SW8270D | |
| Hexachlorobenzene | ND | 560 | ug/Kg | 03/05/15 | DD | SW8270D | |
| Hexachlorobutadiene | ND | 560 | ug/Kg | 03/05/15 | DD | SW8270D | |
| Hexachlorocyclopentadiene | ND | 560 | ug/Kg | 03/05/15 | DD | SW8270D | |
| Hexachloroethane | ND | 560 | ug/Kg | 03/05/15 | DD | SW8270D | |
| Indeno(1,2,3-cd)pyrene | 2700 | 560 | ug/Kg | 03/05/15 | DD | SW8270D | |
| Isophorone | ND | 560 | ug/Kg | 03/05/15 | DD | SW8270D | |
| Naphthalene | 720 | 560 | ug/Kg | 03/05/15 | DD | SW8270D | |
| Nitrobenzene | ND | 560 | ug/Kg | 03/05/15 | DD | SW8270D | |
| N-Nitrosodimethylamine | ND | 800 | ug/Kg | 03/05/15 | DD | SW8270D | |
| N-Nitrosodi-n-propylamine | ND | 560 | ug/Kg | 03/05/15 | DD | SW8270D | |
| N-Nitrosodiphenylamine | ND | 800 | ug/Kg | 03/05/15 | DD | SW8270D | |
| Pentachlorophenol | ND | 800 | ug/Kg | 03/05/15 | DD | SW8270D | |
| Phenanthrene | 4100 | 560 | ug/Kg | 03/05/15 | DD | SW8270D | |
| Phenol | ND | 330 | ug/Kg | 03/05/15 | DD | SW8270D | |
| Pyrene | 5800 | 560 | ug/Kg | 03/05/15 | DD | SW8270D | |

Project ID: 109 MARBLEDALE RD., TUCKAHOE, NY
Client ID: TB-3 (2-4)

Phoenix I.D.: BH79483

| Parameter | Result | RL/ PQL | Units | Date/Time | By | Reference |
|---|---|---|---|---|---|---|
| **QA/QC Surrogates** | | | | | | |
| % 2,4,6-Tribromophenol | 81 | | % | 03/05/15 | DD | 30 - 130 % |
| % 2-Fluorobiphenyl | 71 | | % | 03/05/15 | DD | 30 - 130 % |
| % 2-Fluorophenol | 67 | | % | 03/05/15 | DD | 30 - 130 % |
| % Nitrobenzene-d5 | 70 | | % | 03/05/15 | DD | 30 - 130 % |
| % Phenol-d5 | 66 | | % | 03/05/15 | DD | 30 - 130 % |
| % Terphenyl-d14 | 55 | | % | 03/05/15 | DD | 30 - 130 % |
| SVOA Library Search Top 15 | Completed | | | 03/06/15 | DD | |

1 = This parameter is not certified by NY NELAC for this matrix. NY NELAC does not offer certification for all parameters at this time.

**RL/PQL=Reporting/Practical Quantitation Level (Equivalent to NELAC LOQ, Limit of Quanitation) ND=Not Detected BRL=Below Reporting Level**

## Comments:

Please be advised that the NY 375 soil criteria for chromium are based on hexavalent chromium and trivalent chromium.

Semi-Volatile Comment:
Due to a matrix interference and/or the presence of a large amount of non-target material in the sample, a dilution was required resulting in an elevated RL for the semivolatile analysis.

All soils, solids and sludges are reported on a dry weight basis unless otherwise noted in the sample comments.

If there are any questions regarding this data, please call Phoenix Client Services at extension 200.
This report must not be reproduced except in full as defined by the attached chain of custody.

**Phyllis Shiller, Laboratory Director**
**March 16, 2015**
**Reviewed and Released by: Phyllis Shiller, Laboratory Director**

PHOENIX

Environmental Laboratories, Inc.
587 East Middle Turnpike, P.O.Box 370, Manchester, CT 06045
Tel. (860) 645-1102 Fax (860) 645-0823

ACCREDITED IN ACCORDANCE WITH nelac NY # 11301

# Analysis Report

March 16, 2015

FOR: Attn: Mr. Tim Carr
HydroEnvironmental Solutions, Inc.
One Deans Bridge Rd
Somers NY 10589

| Sample Information | | Custody Information | | Date | Time |
|---|---|---|---|---|---|
| Matrix: | SOIL | Collected by: | | 03/03/15 | 14:00 |
| Location Code: | HESNY-TUCK | Received by: | LB | 03/04/15 | 16:20 |
| Rush Request: | 72 Hour | Analyzed by: | see "By" below | | |
| P.O.#: | | | | | |

## Laboratory Data

SDG ID: GBH79483
Phoenix ID: BH79484

Project ID: 109 MARBLEDALE RD., TUCKAHOE, NY
Client ID: TB-4 (24-26)

| Parameter | Result | RL/ PQL | Units | Date/Time | By | Reference |
|---|---|---|---|---|---|---|
| Silver | < 0.39 | 0.39 | mg/Kg | 03/05/15 | LK | SW6010C |
| Aluminum | 8790 | 58 | mg/Kg | 03/05/15 | LK | SW6010C |
| Arsenic | 12.0 | 0.8 | mg/Kg | 03/05/15 | LK | SW6010C |
| Barium | 104 | 0.39 | mg/Kg | 03/05/15 | LK | SW6010C |
| Beryllium | < 0.31 | 0.31 | mg/Kg | 03/05/15 | LK | SW6010C |
| Calcium | 21600 | 58 | mg/Kg | 03/05/15 | LK | SW6010C |
| Cadmium | 1.15 | 0.39 | mg/Kg | 03/05/15 | LK | SW6010C |
| Cobalt | 9.44 | 0.39 | mg/Kg | 03/05/15 | LK | SW6010C |
| Chromium | 36.5 | 0.39 | mg/Kg | 03/05/15 | LK | SW6010C |
| Copper | 150 | 3.9 | mg/kg | 03/05/15 | LK | SW6010C |
| Iron | 24900 | 58 | mg/Kg | 03/05/15 | LK | SW6010C |
| Mercury | 0.34 | 0.03 | mg/Kg | 03/05/15 | MA | SW7471B |
| Potassium | 1540 | 5.8 | mg/Kg | 03/05/15 | LK | SW6010C |
| Magnesium | 6890 | 58 | mg/Kg | 03/05/15 | LK | SW6010C |
| Manganese | 286 | 3.9 | mg/Kg | 03/05/15 | LK | SW6010C |
| Sodium | 354 | 5.8 | mg/Kg | 03/05/15 | LK | SW6010C |
| Nickel | 28.6 | 0.39 | mg/Kg | 03/05/15 | LK | SW6010C |
| Lead | 419 | 3.9 | mg/Kg | 03/05/15 | LK | SW6010C |
| Antimony | < 3.9 | 3.9 | mg/Kg | 03/05/15 | LK | SW6010C |
| Selenium | < 1.5 | 1.5 | mg/Kg | 03/05/15 | LK | SW6010C |
| Thallium | < 3.5 | 3.5 | mg/Kg | 03/05/15 | LK | SW6010C |
| Vanadium | 56.4 | 0.39 | mg/Kg | 03/05/15 | LK | SW6010C |
| Zinc | 342 | 3.9 | mg/Kg | 03/05/15 | LK | SW6010C |
| Percent Solid | 79 | | % | 03/04/15 | I | SW846-%Solid |
| Total Cyanide | < 0.63 | 0.63 | mg/Kg | 03/04/15 | O/B/E | SW9012B |
| Soil Extraction for PCB | Completed | | | 03/04/15 | CC/H | SW3545A |
| Soil Extraction for SVOA | Completed | | | 03/04/15 | JJ/VH | SW3545A |
| Mercury Digestion | Completed | | | 03/05/15 | I/I | SW7471B |

Project ID: 109 MARBLEDALE RD., TUCKAHOE, NY
Client ID: TB-4 (24-26)

Phoenix I.D.: BH79484

| Parameter | Result | RL/ PQL | Units | Date/Time | By | Reference |
|---|---|---|---|---|---|---|
| Total Metals Digest | Completed | | | 03/04/15 | CB/AG | SW3050B |
| **Polychlorinated Biphenyls** | | | | | | |
| PCB-1016 | ND | 410 | ug/Kg | 03/06/15 | AW | SW8082A |
| PCB-1221 | ND | 410 | ug/Kg | 03/06/15 | AW | SW8082A |
| PCB-1232 | ND | 410 | ug/Kg | 03/06/15 | AW | SW8082A |
| PCB-1242 | ND | 410 | ug/Kg | 03/06/15 | AW | SW8082A |
| PCB-1248 | ND | 410 | ug/Kg | 03/06/15 | AW | SW8082A |
| PCB-1254 | ND | 410 | ug/Kg | 03/06/15 | AW | SW8082A |
| PCB-1260 | 1100 | 410 | ug/Kg | 03/06/15 | AW | SW8082A |
| PCB-1262 | ND | 410 | ug/Kg | 03/06/15 | AW | SW8082A |
| PCB-1268 | ND | 410 | ug/Kg | 03/06/15 | AW | SW8082A |
| **QA/QC Surrogates** | | | | | | |
| % DCBP | 120 | | % | 03/06/15 | AW | 30 - 150 % |
| % TCMX | 82 | | % | 03/06/15 | AW | 30 - 150 % |
| **Volatiles (TCL)** | | | | | | |
| 1,1,1-Trichloroethane | ND | 8.1 | ug/kg | 03/05/15 | JLI | SW8260C |
| 1,1,2,2-Tetrachloroethane | ND | 8.1 | ug/kg | 03/05/15 | JLI | SW8260C |
| 1,1,2-Trichloroethane | ND | 8.1 | ug/kg | 03/05/15 | JLI | SW8260C |
| 1,1-Dichloroethane | ND | 8.1 | ug/kg | 03/05/15 | JLI | SW8260C |
| 1,1-Dichloroethene | ND | 8.1 | ug/kg | 03/05/15 | JLI | SW8260C |
| 1,2,3-Trichlorobenzene | ND | 360 | ug/kg | 03/05/15 | JLI | SW8260C |
| 1,2,4-Trichlorobenzene | ND | 360 | ug/kg | 03/05/15 | JLI | SW8260C |
| 1,2-Dibromo-3-chloropropane | ND | 360 | ug/kg | 03/05/15 | JLI | SW8260C |
| 1,2-Dibromoethane | ND | 8.1 | ug/kg | 03/05/15 | JLI | SW8260C |
| 1,2-Dichlorobenzene | ND | 360 | ug/kg | 03/05/15 | JLI | SW8260C |
| 1,2-Dichloroethane | ND | 8.1 | ug/kg | 03/05/15 | JLI | SW8260C |
| 1,2-Dichloropropane | ND | 8.1 | ug/kg | 03/05/15 | JLI | SW8260C |
| 1,3-Dichlorobenzene | ND | 360 | ug/kg | 03/05/15 | JLI | SW8260C |
| 1,4-Dichlorobenzene | ND | 360 | ug/kg | 03/05/15 | JLI | SW8260C |
| 2-Hexanone | ND | 41 | ug/kg | 03/05/15 | JLI | SW8260C |
| 4-Methyl-2-pentanone | ND | 41 | ug/kg | 03/05/15 | JLI | SW8260C |
| Acetone | 250 | 81 | ug/kg | 03/05/15 | JLI | SW8260C |
| Benzene | ND | 8.1 | ug/kg | 03/05/15 | JLI | SW8260C |
| Bromochloromethane | ND | 8.1 | ug/kg | 03/05/15 | JLI | SW8260C |
| Bromodichloromethane | ND | 8.1 | ug/kg | 03/05/15 | JLI | SW8260C |
| Bromoform | ND | 8.1 | ug/kg | 03/05/15 | JLI | SW8260C |
| Bromomethane | ND | 8.1 | ug/kg | 03/05/15 | JLI | SW8260C |
| Carbon Disulfide | ND | 8.1 | ug/kg | 03/05/15 | JLI | SW8260C |
| Carbon tetrachloride | ND | 8.1 | ug/kg | 03/05/15 | JLI | SW8260C |
| Chlorobenzene | ND | 20 | ug/kg | 03/05/15 | JLI | SW8260C |
| Chloroethane | ND | 8.1 | ug/kg | 03/05/15 | JLI | SW8260C |
| Chloroform | ND | 8.1 | ug/kg | 03/05/15 | JLI | SW8260C |
| Chloromethane | ND | 8.1 | ug/kg | 03/05/15 | JLI | SW8260C |
| cis-1,2-Dichloroethene | ND | 8.1 | ug/kg | 03/05/15 | JLI | SW8260C |
| cis-1,3-Dichloropropene | ND | 8.1 | ug/kg | 03/05/15 | JLI | SW8260C |
| Cyclohexane | ND | 8.1 | ug/kg | 03/05/15 | JLI | SW8260C |
| Dibromochloromethane | ND | 8.1 | ug/kg | 03/05/15 | JLI | SW8260C |
| Dichlorodifluoromethane | ND | 8.1 | ug/kg | 03/05/15 | JLI | SW8260C |

Project ID: 109 MARBLEDALE RD., TUCKAHOE, NY
Client ID: TB-4 (24-26)

Phoenix I.D.: BH79484

| Parameter | Result | RL/ PQL | Units | Date/Time | By | Reference |
|---|---|---|---|---|---|---|
| Ethylbenzene | ND | 8.1 | ug/kg | 03/05/15 | JLI | SW8260C |
| Isopropylbenzene | ND | 360 | ug/kg | 03/05/15 | JLI | SW8260C |
| m&p-Xylene | ND | 8.1 | ug/kg | 03/05/15 | JLI | SW8260C |
| Methyl ethyl ketone | 110 | 49 | ug/kg | 03/05/15 | JLI | SW8260C |
| Methyl t-butyl ether (MTBE) | ND | 16 | ug/kg | 03/05/15 | JLI | SW8260C |
| Methylacetate | ND | 6.5 | ug/kg | 03/05/15 | JLI | SW8260C |
| Methylcyclohexane | 13 | 8.1 | ug/kg | 03/05/15 | JLI | SW8260C |
| Methylene chloride | ND | 8.1 | ug/kg | 03/05/15 | JLI | SW8260C |
| o-Xylene | ND | 8.1 | ug/kg | 03/05/15 | JLI | SW8260C |
| Styrene | ND | 8.1 | ug/kg | 03/05/15 | JLI | SW8260C |
| Tetrachloroethene | ND | 8.1 | ug/kg | 03/05/15 | JLI | SW8260C |
| Toluene | ND | 8.1 | ug/kg | 03/05/15 | JLI | SW8260C |
| Total Xylenes | ND | 8.1 | ug/kg | 03/05/15 | JLI | SW8260C |
| trans-1,2-Dichloroethene | ND | 8.1 | ug/kg | 03/05/15 | JLI | SW8260C |
| trans-1,3-Dichloropropene | ND | 8.1 | ug/kg | 03/05/15 | JLI | SW8260C |
| Trichloroethene | ND | 8.1 | ug/kg | 03/05/15 | JLI | SW8260C |
| Trichlorofluoromethane | ND | 8.1 | ug/kg | 03/05/15 | JLI | SW8260C |
| Trichlorotrifluoroethane | ND | 8.1 | ug/kg | 03/05/15 | JLI | SW8260C |
| Vinyl chloride | ND | 8.1 | ug/kg | 03/05/15 | JLI | SW8260C |
| **QA/QC Surrogates** | | | | | | |
| % 1,2-dichlorobenzene-d4 | 97 | | % | 03/05/15 | JLI | 70 - 130 % |
| % Bromofluorobenzene | 101 | | % | 03/05/15 | JLI | 70 - 130 % |
| % Dibromofluoromethane | 99 | | % | 03/05/15 | JLI | 70 - 130 % |
| % Toluene-d8 | 86 | | % | 03/05/15 | JLI | 70 - 130 % |
| **1,4-dioxane** | | | | | | |
| 1,4-dioxane | ND | 100 | ug/kg | 03/05/15 | JLI | SW8260C |
| Volatile Library Search Top 10 | Completed | | | 03/05/15 | JLI | |
| **Semivolatiles** | | | | | | |
| 1,1-Biphenyl | ND | 590 | ug/Kg | 03/05/15 | DD | SW8270D |
| 1,2,4,5-Tetrachlorobenzene | ND | 590 | ug/Kg | 03/05/15 | DD | SW8270D |
| 2,3,4,6-tetrachlorophenol | ND | 590 | ug/Kg | 03/05/15 | DD | SW8270D |
| 2,4,5-Trichlorophenol | ND | 590 | ug/Kg | 03/05/15 | DD | SW8270D |
| 2,4,6-Trichlorophenol | ND | 590 | ug/Kg | 03/05/15 | DD | SW8270D |
| 2,4-Dichlorophenol | ND | 590 | ug/Kg | 03/05/15 | DD | SW8270D |
| 2,4-Dimethylphenol | ND | 590 | ug/Kg | 03/05/15 | DD | SW8270D |
| 2,4-Dinitrophenol | ND | 1300 | ug/Kg | 03/05/15 | DD | SW8270D |
| 2,4-Dinitrotoluene | ND | 590 | ug/Kg | 03/05/15 | DD | SW8270D |
| 2,6-Dinitrotoluene | ND | 590 | ug/Kg | 03/05/15 | DD | SW8270D |
| 2-Chloronaphthalene | ND | 590 | ug/Kg | 03/05/15 | DD | SW8270D |
| 2-Chlorophenol | ND | 590 | ug/Kg | 03/05/15 | DD | SW8270D |
| 2-Methylnaphthalene | ND | 590 | ug/Kg | 03/05/15 | DD | SW8270D |
| 2-Methylphenol (o-cresol) | ND | 330 | ug/Kg | 03/05/15 | DD | SW8270D |
| 2-Nitroaniline | ND | 1300 | ug/Kg | 03/05/15 | DD | SW8270D |
| 2-Nitrophenol | ND | 590 | ug/Kg | 03/05/15 | DD | SW8270D |
| 3&4-Methylphenol (m&p-cresol) | ND | 840 | ug/Kg | 03/05/15 | DD | SW8270D 1 |
| 3,3'-Dichlorobenzidine | ND | 1000 | ug/Kg | 03/05/15 | DD | SW8270D |
| 3-Nitroaniline | ND | 1300 | ug/Kg | 03/05/15 | DD | SW8270D |

Project ID: 109 MARBLEDALE RD., TUCKAHOE, NY
Client ID: TB-4 (24-26)

Phoenix I.D.: BH79484

| Parameter | Result | RL/ PQL | Units | Date/Time | By | Reference | |
|---|---|---|---|---|---|---|---|
| 4,6-Dinitro-2-methylphenol | ND | 2400 | ug/Kg | 03/05/15 | DD | SW8270D | |
| 4-Bromophenyl phenyl ether | ND | 840 | ug/Kg | 03/05/15 | DD | SW8270D | |
| 4-Chloro-3-methylphenol | ND | 590 | ug/Kg | 03/05/15 | DD | SW8270D | |
| 4-Chloroaniline | ND | 590 | ug/Kg | 03/05/15 | DD | SW8270D | |
| 4-Chlorophenyl phenyl ether | ND | 590 | ug/Kg | 03/05/15 | DD | SW8270D | |
| 4-Nitroaniline | ND | 1300 | ug/Kg | 03/05/15 | DD | SW8270D | |
| 4-Nitrophenol | ND | 2400 | ug/Kg | 03/05/15 | DD | SW8270D | |
| Acenaphthene | ND | 590 | ug/Kg | 03/05/15 | DD | SW8270D | |
| Acenaphthylene | ND | 590 | ug/Kg | 03/05/15 | DD | SW8270D | |
| Acetophenone | ND | 590 | ug/Kg | 03/05/15 | DD | SW8270D | |
| Anthracene | ND | 590 | ug/Kg | 03/05/15 | DD | SW8270D | |
| Atrazine | ND | 590 | ug/Kg | 03/05/15 | DD | SW8270D | |
| Benz(a)anthracene | ND | 590 | ug/Kg | 03/05/15 | DD | SW8270D | |
| Benzaldehyde | ND | 590 | ug/Kg | 03/05/15 | DD | SW8270D | |
| Benzo(a)pyrene | ND | 590 | ug/Kg | 03/05/15 | DD | SW8270D | |
| Benzo(b)fluoranthene | 790 | 590 | ug/Kg | 03/05/15 | DD | SW8270D | |
| Benzo(ghi)perylene | ND | 590 | ug/Kg | 03/05/15 | DD | SW8270D | |
| Benzo(k)fluoranthene | ND | 590 | ug/Kg | 03/05/15 | DD | SW8270D | |
| Benzyl butyl phthalate | ND | 590 | ug/Kg | 03/05/15 | DD | SW8270D | |
| Bis(2-chloroethoxy)methane | ND | 590 | ug/Kg | 03/05/15 | DD | SW8270D | |
| Bis(2-chloroethyl)ether | ND | 840 | ug/Kg | 03/05/15 | DD | SW8270D | |
| Bis(2-chloroisopropyl)ether | ND | 590 | ug/Kg | 03/05/15 | DD | SW8270D | 1 |
| Bis(2-ethylhexyl)phthalate | 3600 | 590 | ug/Kg | 03/05/15 | DD | SW8270D | |
| Caprolactam | ND | 590 | ug/Kg | 03/05/15 | DD | SW8270D | |
| Carbazole | ND | 2400 | ug/Kg | 03/05/15 | DD | SW8270D | |
| Chrysene | 730 | 590 | ug/Kg | 03/05/15 | DD | SW8270D | |
| Dibenz(a,h)anthracene | ND | 330 | ug/Kg | 03/05/15 | DD | SW8270D | |
| Dibenzofuran | ND | 590 | ug/Kg | 03/05/15 | DD | SW8270D | |
| Diethyl phthalate | ND | 590 | ug/Kg | 03/05/15 | DD | SW8270D | |
| Dimethylphthalate | ND | 590 | ug/Kg | 03/05/15 | DD | SW8270D | |
| Di-n-butylphthalate | ND | 590 | ug/Kg | 03/05/15 | DD | SW8270D | |
| Di-n-octylphthalate | ND | 590 | ug/Kg | 03/05/15 | DD | SW8270D | |
| Fluoranthene | 850 | 590 | ug/Kg | 03/05/15 | DD | SW8270D | |
| Fluorene | ND | 590 | ug/Kg | 03/05/15 | DD | SW8270D | |
| Hexachlorobenzene | ND | 590 | ug/Kg | 03/05/15 | DD | SW8270D | |
| Hexachlorobutadiene | ND | 590 | ug/Kg | 03/05/15 | DD | SW8270D | |
| Hexachlorocyclopentadiene | ND | 590 | ug/Kg | 03/05/15 | DD | SW8270D | |
| Hexachloroethane | ND | 590 | ug/Kg | 03/05/15 | DD | SW8270D | |
| Indeno(1,2,3-cd)pyrene | ND | 500 | ug/Kg | 03/05/15 | DD | SW8270D | |
| Isophorone | ND | 590 | ug/Kg | 03/05/15 | DD | SW8270D | |
| Naphthalene | ND | 590 | ug/Kg | 03/05/15 | DD | SW8270D | |
| Nitrobenzene | ND | 590 | ug/Kg | 03/05/15 | DD | SW8270D | |
| N-Nitrosodimethylamine | ND | 840 | ug/Kg | 03/05/15 | DD | SW8270D | |
| N-Nitrosodi-n-propylamine | ND | 590 | ug/Kg | 03/05/15 | DD | SW8270D | |
| N-Nitrosodiphenylamine | ND | 840 | ug/Kg | 03/05/15 | DD | SW8270D | |
| Pentachlorophenol | ND | 800 | ug/Kg | 03/05/15 | DD | SW8270D | |
| Phenanthrene | 800 | 590 | ug/Kg | 03/05/15 | DD | SW8270D | |
| Phenol | ND | 330 | ug/Kg | 03/05/15 | DD | SW8270D | |
| Pyrene | 670 | 590 | ug/Kg | 03/05/15 | DD | SW8270D | |

Project ID: 109 MARBLEDALE RD., TUCKAHOE, NY
Client ID: TB-4 (24-26)

Phoenix I.D.: BH79484

| Parameter | Result | RL/ PQL | Units | Date/Time | By | Reference |
|---|---|---|---|---|---|---|
| **QA/QC Surrogates** | | | | | | |
| % 2,4,6-Tribromophenol | 76 | | % | 03/05/15 | DD | 30 - 130 % |
| % 2-Fluorobiphenyl | 63 | | % | 03/05/15 | DD | 30 - 130 % |
| % 2-Fluorophenol | 49 | | % | 03/05/15 | DD | 30 - 130 % |
| % Nitrobenzene-d5 | 60 | | % | 03/05/15 | DD | 30 - 130 % |
| % Phenol-d5 | 54 | | % | 03/05/15 | DD | 30 - 130 % |
| % Terphenyl-d14 | 50 | | % | 03/05/15 | DD | 30 - 130 % |
| SVOA Library Search Top 15 | Completed | | | 03/06/15 | DD | |

1 = This parameter is not certified by NY NELAC for this matrix. NY NELAC does not offer certification for all parameters at this time.

**RL/PQL=Reporting/Practical Quantitation Level (Equivalent to NELAC LOQ, Limit of Quanitation) ND=Not Detected BRL=Below Reporting Level**

## Comments:

Please be advised that the NY 375 soil criteria for chromium are based on hexavalent chromium and trivalent chromium.

Volatile Comment:
There was a suppression of the last internal standard in the low level analysis, all affected compounds are reported from the methanol preserved high level analysis which did not exhibit this interference.

Semi-Volatile Comment:
Due to a matrix interference and/or the presence of a large amount of non-target material in the sample, a dilution was required resulting in an elevated RL for the semivolatile analysis.

All soils, solids and sludges are reported on a dry weight basis unless otherwise noted in the sample comments.

If there are any questions regarding this data, please call Phoenix Client Services at extension 200.
This report must not be reproduced except in full as defined by the attached chain of custody.

**Phyllis Shiller, Laboratory Director**
**March 16, 2015**
**Reviewed and Released by: Phyllis Shiller, Laboratory Director**

PHOENIX

Environmental Laboratories, Inc.
587 East Middle Turnpike, P.O.Box 370, Manchester, CT 06045
Tel. (860) 645-1102 Fax (860) 645-0823

ACCREDITED IN ACCORDANCE WITH nelac NY # 11301

# Analysis Report

March 16, 2015

FOR: Attn: Mr. Tim Carr
HydroEnvironmental Solutions, Inc.
One Deans Bridge Rd
Somers NY 10589

| Sample Information | | Custody Information | | Date | Time |
|---|---|---|---|---|---|
| Matrix: | SOIL | Collected by: | | 03/03/15 | 14:00 |
| Location Code: | HESNY-TUCK | Received by: | LB | 03/04/15 | 16:20 |
| Rush Request: | 72 Hour | Analyzed by: | see "By" below | | |
| P.O.#: | | | | | |

## Laboratory Data

SDG ID: GBH79483
Phoenix ID: BH79485

Project ID: 109 MARBLEDALE RD., TUCKAHOE, NY
Client ID: TB-4 (30-32)

| Parameter | Result | RL/ PQL | Units | Date/Time | By | Reference |
|---|---|---|---|---|---|---|
| Silver | < 0.51 | 0.51 | mg/Kg | 03/05/15 | LK | SW6010C |
| Aluminum | 11300 | 76 | mg/Kg | 03/05/15 | LK | SW6010C |
| Arsenic | 25.1 | 1.0 | mg/Kg | 03/05/15 | LK | SW6010C |
| Barium | 1120 | 0.51 | mg/Kg | 03/05/15 | LK | SW6010C |
| Beryllium | 0.46 | 0.40 | mg/Kg | 03/05/15 | LK | SW6010C |
| Calcium | 5090 | 7.6 | mg/Kg | 03/05/15 | LK | SW6010C |
| Cadmium | 3.12 | 0.51 | mg/Kg | 03/05/15 | LK | SW6010C |
| Cobalt | 6.72 | 0.51 | mg/Kg | 03/05/15 | LK | SW6010C |
| Chromium | 82.0 | 0.51 | mg/Kg | 03/05/15 | LK | SW6010C |
| Copper | 69.0 | 0.51 | mg/kg | 03/05/15 | LK | SW6010C |
| Iron | 15500 | 76 | mg/Kg | 03/05/15 | LK | SW6010C |
| Mercury | 0.29 | 0.04 | mg/Kg | 03/05/15 | MA | SW7471B |
| Potassium | 1640 | 7.6 | mg/Kg | 03/05/15 | LK | SW6010C |
| Magnesium | 3580 | 7.6 | mg/Kg | 03/05/15 | LK | SW6010C |
| Manganese | 278 | 5.1 | mg/Kg | 03/05/15 | LK | SW6010C |
| Sodium | 229 | 7.6 | mg/Kg | 03/05/15 | LK | SW6010C |
| Nickel | 21.8 | 0.51 | mg/Kg | 03/05/15 | LK | SW6010C |
| Lead | 589 | 5.1 | mg/Kg | 03/05/15 | LK | SW6010C |
| Antimony | < 5.1 | 5.1 | mg/Kg | 03/05/15 | LK | SW6010C |
| Selenium | < 2.0 | 2.0 | mg/Kg | 03/05/15 | LK | SW6010C |
| Thallium | < 4.6 | 4.6 | mg/Kg | 03/05/15 | LK | SW6010C |
| Vanadium | 80.5 | 0.51 | mg/Kg | 03/05/15 | LK | SW6010C |
| Zinc | 216 | 5.1 | mg/Kg | 03/05/15 | LK | SW6010C |
| Percent Solid | 61 | | % | 03/04/15 | I | SW846-%Solid |
| Total Cyanide | < 0.82 | 0.82 | mg/Kg | 03/04/15 | O/B/E | SW9012B |
| Soil Extraction for PCB | Completed | | | 03/04/15 | CC/H | SW3545A |
| Soil Extraction for SVOA | Completed | | | 03/04/15 | JJ/VH | SW3545A |
| Mercury Digestion | Completed | | | 03/05/15 | I/I | SW7471B |

Project ID: 109 MARBLEDALE RD., TUCKAHOE, NY
Client ID: TB-4 (30-32)

Phoenix I.D.: BH79485

| Parameter | Result | RL/ PQL | Units | Date/Time | By | Reference |
|---|---|---|---|---|---|---|
| Total Metals Digest | Completed | | | 03/04/15 | CB/AG | SW3050B |
| **Polychlorinated Biphenyls** | | | | | | |
| PCB-1016 | ND | 54 | ug/Kg | 03/06/15 | AW | SW8082A |
| PCB-1221 | ND | 54 | ug/Kg | 03/06/15 | AW | SW8082A |
| PCB-1232 | ND | 54 | ug/Kg | 03/06/15 | AW | SW8082A |
| PCB-1242 | ND | 54 | ug/Kg | 03/06/15 | AW | SW8082A |
| PCB-1248 | ND | 54 | ug/Kg | 03/06/15 | AW | SW8082A |
| PCB-1254 | ND | 54 | ug/Kg | 03/06/15 | AW | SW8082A |
| PCB-1260 | ND | 54 | ug/Kg | 03/06/15 | AW | SW8082A |
| PCB-1262 | ND | 54 | ug/Kg | 03/06/15 | AW | SW8082A |
| PCB-1268 | ND | 54 | ug/Kg | 03/06/15 | AW | SW8082A |
| **QA/QC Surrogates** | | | | | | |
| % DCBP | 46 | | % | 03/06/15 | AW | 30 - 150 % |
| % TCMX | 51 | | % | 03/06/15 | AW | 30 - 150 % |
| **Volatiles (TCL)** | | | | | | |
| 1,1,1-Trichloroethane | ND | 8.1 | ug/kg | 03/05/15 | JLI | SW8260C |
| 1,1,2,2-Tetrachloroethane | ND | 8.1 | ug/kg | 03/05/15 | JLI | SW8260C |
| 1,1,2-Trichloroethane | ND | 8.1 | ug/kg | 03/05/15 | JLI | SW8260C |
| 1,1-Dichloroethane | ND | 8.1 | ug/kg | 03/05/15 | JLI | SW8260C |
| 1,1-Dichloroethene | ND | 8.1 | ug/kg | 03/05/15 | JLI | SW8260C |
| 1,2,3-Trichlorobenzene | ND | 360 | ug/kg | 03/05/15 | JLI | SW8260C |
| 1,2,4-Trichlorobenzene | ND | 360 | ug/kg | 03/05/15 | JLI | SW8260C |
| 1,2-Dibromo-3-chloropropane | ND | 360 | ug/kg | 03/05/15 | JLI | SW8260C |
| 1,2-Dibromoethane | ND | 8.1 | ug/kg | 03/05/15 | JLI | SW8260C |
| 1,2-Dichlorobenzene | ND | 360 | ug/kg | 03/05/15 | JLI | SW8260C |
| 1,2-Dichloroethane | ND | 8.1 | ug/kg | 03/05/15 | JLI | SW8260C |
| 1,2-Dichloropropane | ND | 8.1 | ug/kg | 03/05/15 | JLI | SW8260C |
| 1,3-Dichlorobenzene | ND | 360 | ug/kg | 03/05/15 | JLI | SW8260C |
| 1,4-Dichlorobenzene | ND | 360 | ug/kg | 03/05/15 | JLI | SW8260C |
| 2-Hexanone | ND | 41 | ug/kg | 03/05/15 | JLI | SW8260C |
| 4-Methyl-2-pentanone | ND | 41 | ug/kg | 03/05/15 | JLI | SW8260C |
| Acetone | 220 | 81 | ug/kg | 03/05/15 | JLI | SW8260C |
| Benzene | ND | 8.1 | ug/kg | 03/05/15 | JLI | SW8260C |
| Bromochloromethane | ND | 8.1 | ug/kg | 03/05/15 | JLI | SW8260C |
| Bromodichloromethane | ND | 8.1 | ug/kg | 03/05/15 | JLI | SW8260C |
| Bromoform | ND | 8.1 | ug/kg | 03/05/15 | JLI | SW8260C |
| Bromomethane | ND | 8.1 | ug/kg | 03/05/15 | JLI | SW8260C |
| Carbon Disulfide | ND | 8.1 | ug/kg | 03/05/15 | JLI | SW8260C |
| Carbon tetrachloride | ND | 8.1 | ug/kg | 03/05/15 | JLI | SW8260C |
| Chlorobenzene | ND | 20 | ug/kg | 03/05/15 | JLI | SW8260C |
| Chloroethane | ND | 8.1 | ug/kg | 03/05/15 | JLI | SW8260C |
| Chloroform | ND | 8.1 | ug/kg | 03/05/15 | JLI | SW8260C |
| Chloromethane | ND | 8.1 | ug/kg | 03/05/15 | JLI | SW8260C |
| cis-1,2-Dichloroethene | ND | 8.1 | ug/kg | 03/05/15 | JLI | SW8260C |
| cis-1,3-Dichloropropene | ND | 8.1 | ug/kg | 03/05/15 | JLI | SW8260C |
| Cyclohexane | ND | 8.1 | ug/kg | 03/05/15 | JLI | SW8260C |
| Dibromochloromethane | ND | 8.1 | ug/kg | 03/05/15 | JLI | SW8260C |
| Dichlorodifluoromethane | ND | 8.1 | ug/kg | 03/05/15 | JLI | SW8260C |

| Parameter | Result | RL/ PQL | Units | Date/Time | By | Reference |
|---|---|---|---|---|---|---|
| Ethylbenzene | ND | 8.1 | ug/kg | 03/05/15 | JLI | SW8260C |
| Isopropylbenzene | ND | 360 | ug/kg | 03/05/15 | JLI | SW8260C |
| m&p-Xylene | ND | 8.1 | ug/kg | 03/05/15 | JLI | SW8260C |
| Methyl ethyl ketone | 110 | 49 | ug/kg | 03/05/15 | JLI | SW8260C |
| Methyl t-butyl ether (MTBE) | ND | 16 | ug/kg | 03/05/15 | JLI | SW8260C |
| Methylacetate | ND | 6.5 | ug/kg | 03/05/15 | JLI | SW8260C |
| Methylcyclohexane | 12 | 8.1 | ug/kg | 03/05/15 | JLI | SW8260C |
| Methylene chloride | ND | 8.1 | ug/kg | 03/05/15 | JLI | SW8260C |
| o-Xylene | ND | 8.1 | ug/kg | 03/05/15 | JLI | SW8260C |
| Styrene | ND | 8.1 | ug/kg | 03/05/15 | JLI | SW8260C |
| Tetrachloroethene | ND | 8.1 | ug/kg | 03/05/15 | JLI | SW8260C |
| Toluene | ND | 8.1 | ug/kg | 03/05/15 | JLI | SW8260C |
| Total Xylenes | ND | 8.1 | ug/kg | 03/05/15 | JLI | SW8260C |
| trans-1,2-Dichloroethene | ND | 8.1 | ug/kg | 03/05/15 | JLI | SW8260C |
| trans-1,3-Dichloropropene | ND | 8.1 | ug/kg | 03/05/15 | JLI | SW8260C |
| Trichloroethene | ND | 8.1 | ug/kg | 03/05/15 | JLI | SW8260C |
| Trichlorofluoromethane | ND | 8.1 | ug/kg | 03/05/15 | JLI | SW8260C |
| Trichlorotrifluoroethane | ND | 8.1 | ug/kg | 03/05/15 | JLI | SW8260C |
| Vinyl chloride | ND | 8.1 | ug/kg | 03/05/15 | JLI | SW8260C |
| **QA/QC Surrogates** | | | | | | |
| % 1,2-dichlorobenzene-d4 | 94 | | % | 03/05/15 | JLI | 70 - 130 % |
| % Bromofluorobenzene | 100 | | % | 03/05/15 | JLI | 70 - 130 % |
| % Dibromofluoromethane | 105 | | % | 03/05/15 | JLI | 70 - 130 % |
| % Toluene-d8 | 84 | | % | 03/05/15 | JLI | 70 - 130 % |
| **1,4-dioxane** | | | | | | |
| 1,4-dioxane | ND | 100 | ug/kg | 03/05/15 | JLI | SW8260C |
| Volatile Library Search Top 10 | Completed | | | 03/05/15 | JLI | |
| **Semivolatiles** | | | | | | |
| 1,1-Biphenyl | ND | 380 | ug/Kg | 03/05/15 | DD | SW8270D |
| 1,2,4,5-Tetrachlorobenzene | ND | 380 | ug/Kg | 03/05/15 | DD | SW8270D |
| 2,3,4,6-tetrachlorophenol | ND | 380 | ug/Kg | 03/05/15 | DD | SW8270D |
| 2,4,5-Trichlorophenol | ND | 380 | ug/Kg | 03/05/15 | DD | SW8270D |
| 2,4,6-Trichlorophenol | ND | 380 | ug/Kg | 03/05/15 | DD | SW8270D |
| 2,4-Dichlorophenol | ND | 380 | ug/Kg | 03/05/15 | DD | SW8270D |
| 2,4-Dimethylphenol | ND | 380 | ug/Kg | 03/05/15 | DD | SW8270D |
| 2,4-Dinitrophenol | ND | 870 | ug/Kg | 03/05/15 | DD | SW8270D |
| 2,4-Dinitrotoluene | ND | 380 | ug/Kg | 03/05/15 | DD | SW8270D |
| 2,6-Dinitrotoluene | ND | 380 | ug/Kg | 03/05/15 | DD | SW8270D |
| 2-Chloronaphthalene | ND | 380 | ug/Kg | 03/05/15 | DD | SW8270D |
| 2-Chlorophenol | ND | 380 | ug/Kg | 03/05/15 | DD | SW8270D |
| 2-Methylnaphthalene | ND | 380 | ug/Kg | 03/05/15 | DD | SW8270D |
| 2-Methylphenol (o-cresol) | ND | 330 | ug/Kg | 03/05/15 | DD | SW8270D |
| 2-Nitroaniline | ND | 870 | ug/Kg | 03/05/15 | DD | SW8270D |
| 2-Nitrophenol | ND | 380 | ug/Kg | 03/05/15 | DD | SW8270D |
| 3&4-Methylphenol (m&p-cresol) | ND | 540 | ug/Kg | 03/05/15 | DD | SW8270D 1 |
| 3,3'-Dichlorobenzidine | ND | 650 | ug/Kg | 03/05/15 | DD | SW8270D |
| 3-Nitroaniline | ND | 870 | ug/Kg | 03/05/15 | DD | SW8270D |

Project ID: 109 MARBLEDALE RD., TUCKAHOE, NY
Client ID: TB-4 (30-32)

Phoenix I.D.: BH79485

| Parameter | Result | RL/ PQL | Units | Date/Time | By | Reference | |
|---|---|---|---|---|---|---|---|
| 4,6-Dinitro-2-methylphenol | ND | 1600 | ug/Kg | 03/05/15 | DD | SW8270D | |
| 4-Bromophenyl phenyl ether | ND | 540 | ug/Kg | 03/05/15 | DD | SW8270D | |
| 4-Chloro-3-methylphenol | ND | 380 | ug/Kg | 03/05/15 | DD | SW8270D | |
| 4-Chloroaniline | ND | 380 | ug/Kg | 03/05/15 | DD | SW8270D | |
| 4-Chlorophenyl phenyl ether | ND | 380 | ug/Kg | 03/05/15 | DD | SW8270D | |
| 4-Nitroaniline | ND | 870 | ug/Kg | 03/05/15 | DD | SW8270D | |
| 4-Nitrophenol | ND | 1600 | ug/Kg | 03/05/15 | DD | SW8270D | |
| Acenaphthene | ND | 380 | ug/Kg | 03/05/15 | DD | SW8270D | |
| Acenaphthylene | ND | 380 | ug/Kg | 03/05/15 | DD | SW8270D | |
| Acetophenone | ND | 380 | ug/Kg | 03/05/15 | DD | SW8270D | |
| Anthracene | ND | 380 | ug/Kg | 03/05/15 | DD | SW8270D | |
| Atrazine | ND | 380 | ug/Kg | 03/05/15 | DD | SW8270D | |
| Benz(a)anthracene | ND | 380 | ug/Kg | 03/05/15 | DD | SW8270D | |
| Benzaldehyde | 620 | 380 | ug/Kg | 03/05/15 | DD | SW8270D | |
| Benzo(a)pyrene | ND | 380 | ug/Kg | 03/05/15 | DD | SW8270D | |
| Benzo(b)fluoranthene | 640 | 380 | ug/Kg | 03/05/15 | DD | SW8270D | |
| Benzo(ghi)perylene | ND | 380 | ug/Kg | 03/05/15 | DD | SW8270D | |
| Benzo(k)fluoranthene | ND | 380 | ug/Kg | 03/05/15 | DD | SW8270D | |
| Benzyl butyl phthalate | ND | 380 | ug/Kg | 03/05/15 | DD | SW8270D | |
| Bis(2-chloroethoxy)methane | ND | 380 | ug/Kg | 03/05/15 | DD | SW8270D | |
| Bis(2-chloroethyl)ether | ND | 540 | ug/Kg | 03/05/15 | DD | SW8270D | |
| Bis(2-chloroisopropyl)ether | ND | 380 | ug/Kg | 03/05/15 | DD | SW8270D | 1 |
| Bis(2-ethylhexyl)phthalate | 3200 | 380 | ug/Kg | 03/05/15 | DD | SW8270D | |
| Caprolactam | ND | 380 | ug/Kg | 03/05/15 | DD | SW8270D | |
| Carbazole | ND | 1600 | ug/Kg | 03/05/15 | DD | SW8270D | |
| Chrysene | 640 | 380 | ug/Kg | 03/05/15 | DD | SW8270D | |
| Dibenz(a,h)anthracene | ND | 330 | ug/Kg | 03/05/15 | DD | SW8270D | |
| Dibenzofuran | ND | 380 | ug/Kg | 03/05/15 | DD | SW8270D | |
| Diethyl phthalate | ND | 380 | ug/Kg | 03/05/15 | DD | SW8270D | |
| Dimethylphthalate | ND | 380 | ug/Kg | 03/05/15 | DD | SW8270D | |
| Di-n-butylphthalate | ND | 380 | ug/Kg | 03/05/15 | DD | SW8270D | |
| Di-n-octylphthalate | ND | 380 | ug/Kg | 03/05/15 | DD | SW8270D | |
| Fluoranthene | 990 | 380 | ug/Kg | 03/05/15 | DD | SW8270D | |
| Fluorene | ND | 380 | ug/Kg | 03/05/15 | DD | SW8270D | |
| Hexachlorobenzene | ND | 380 | ug/Kg | 03/05/15 | DD | SW8270D | |
| Hexachlorobutadiene | ND | 380 | ug/Kg | 03/05/15 | DD | SW8270D | |
| Hexachlorocyclopentadiene | ND | 380 | ug/Kg | 03/05/15 | DD | SW8270D | |
| Hexachloroethane | ND | 380 | ug/Kg | 03/05/15 | DD | SW8270D | |
| Indeno(1,2,3-cd)pyrene | ND | 380 | ug/Kg | 03/05/15 | DD | SW8270D | |
| Isophorone | ND | 380 | ug/Kg | 03/05/15 | DD | SW8270D | |
| Naphthalene | ND | 380 | ug/Kg | 03/05/15 | DD | SW8270D | |
| Nitrobenzene | ND | 380 | ug/Kg | 03/05/15 | DD | SW8270D | |
| N-Nitrosodimethylamine | ND | 540 | ug/Kg | 03/05/15 | DD | SW8270D | |
| N-Nitrosodi-n-propylamine | ND | 380 | ug/Kg | 03/05/15 | DD | SW8270D | |
| N-Nitrosodiphenylamine | ND | 540 | ug/Kg | 03/05/15 | DD | SW8270D | |
| Pentachlorophenol | ND | 540 | ug/Kg | 03/05/15 | DD | SW8270D | |
| Phenanthrene | 440 | 380 | ug/Kg | 03/05/15 | DD | SW8270D | |
| Phenol | ND | 330 | ug/Kg | 03/05/15 | DD | SW8270D | |
| Pyrene | 810 | 380 | ug/Kg | 03/05/15 | DD | SW8270D | |

Project ID: 109 MARBLEDALE RD., TUCKAHOE, NY
Client ID: TB-4 (30-32)

Phoenix I.D.: BH79485

| Parameter | Result | RL/ PQL | Units | Date/Time | By | Reference |
|---|---|---|---|---|---|---|
| **QA/QC Surrogates** | | | | | | |
| % 2,4,6-Tribromophenol | 92 | | % | 03/05/15 | DD | 30 - 130 % |
| % 2-Fluorobiphenyl | 70 | | % | 03/05/15 | DD | 30 - 130 % |
| % 2-Fluorophenol | 60 | | % | 03/05/15 | DD | 30 - 130 % |
| % Nitrobenzene-d5 | 66 | | % | 03/05/15 | DD | 30 - 130 % |
| % Phenol-d5 | 64 | | % | 03/05/15 | DD | 30 - 130 % |
| % Terphenyl-d14 | 68 | | % | 03/05/15 | DD | 30 - 130 % |
| SVOA Library Search Top 15 | Completed | | | 03/06/15 | DD | |

1 = This parameter is not certified by NY NELAC for this matrix. NY NELAC does not offer certification for all parameters at this time.

**RL/PQL=Reporting/Practical Quantitation Level (Equivalent to NELAC LOQ, Limit of Quanitation) ND=Not Detected BRL=Below Reporting Level**

## Comments:

Please be advised that the NY 375 soil criteria for chromium are based on hexavalent chromium and trivalent chromium.

Volatile Comment:
There was a suppression of the last internal standard in the low level analysis, all affected compounds are reported from the methanol preserved high level analysis which did not exhibit this interference.

All soils, solids and sludges are reported on a dry weight basis unless otherwise noted in the sample comments.

If there are any questions regarding this data, please call Phoenix Client Services at extension 200.
This report must not be reproduced except in full as defined by the attached chain of custody.

**Phyllis Shiller, Laboratory Director**
**March 16, 2015**
**Reviewed and Released by: Phyllis Shiller, Laboratory Director**

PHOENIX

Environmental Laboratories, Inc.
587 East Middle Turnpike, P.O.Box 370, Manchester, CT 06045
Tel. (860) 645-1102 Fax (860) 645-0823

ACCREDITED IN ACCORDANCE WITH nelac NY # 11301

# Analysis Report

March 16, 2015

FOR: Attn: Mr. Tim Carr
HydroEnvironmental Solutions, Inc.
One Deans Bridge Rd
Somers NY 10589

| Sample Information | | Custody Information | | Date | Time |
|---|---|---|---|---|---|
| Matrix: | SOIL | Collected by: | | 03/02/15 | 12:00 |
| Location Code: | HESNY-TUCK | Received by: | LB | 03/04/15 | 16:20 |
| Rush Request: | 72 Hour | Analyzed by: | see "By" below | | |
| P.O.#: | | | | | |

## Laboratory Data

SDG ID: GBH79483
Phoenix ID: BH79486

Project ID: 109 MARBLEDALE RD., TUCKAHOE, NY
Client ID: TB-9 (2-4)

| Parameter | Result | RL/ PQL | Units | Date/Time | By | Reference |
|---|---|---|---|---|---|---|
| Silver | < 0.36 | 0.36 | mg/Kg | 03/05/15 | LK | SW6010C |
| Aluminum | 10600 | 54 | mg/Kg | 03/05/15 | LK | SW6010C |
| Arsenic | 3.3 | 0.7 | mg/Kg | 03/05/15 | LK | SW6010C |
| Barium | 79.1 | 0.36 | mg/Kg | 03/05/15 | LK | SW6010C |
| Beryllium | 0.34 | 0.29 | mg/Kg | 03/05/15 | LK | SW6010C |
| Calcium | 15600 | 54 | mg/Kg | 03/05/15 | LK | SW6010C |
| Cadmium | < 0.36 | 0.36 | mg/Kg | 03/05/15 | LK | SW6010C |
| Cobalt | 9.57 | 0.36 | mg/Kg | 03/05/15 | LK | SW6010C |
| Chromium | 25.2 | 0.36 | mg/Kg | 03/05/15 | LK | SW6010C |
| Copper | 60.7 | 0.36 | mg/kg | 03/05/15 | LK | SW6010C |
| Iron | 20100 | 54 | mg/Kg | 03/05/15 | LK | SW6010C |
| Mercury | 0.04 | 0.03 | mg/Kg | 03/05/15 | MA | SW7471B |
| Potassium | 2340 | 5.4 | mg/Kg | 03/05/15 | LK | SW6010C |
| Magnesium | 6620 | 54 | mg/Kg | 03/05/15 | LK | SW6010C |
| Manganese | 279 | 3.6 | mg/Kg | 03/05/15 | LK | SW6010C |
| Sodium | 289 | 5.4 | mg/Kg | 03/05/15 | LK | SW6010C |
| Nickel | 20.3 | 0.36 | mg/Kg | 03/05/15 | LK | SW6010C |
| Lead | 52.5 | 0.36 | mg/Kg | 03/05/15 | LK | SW6010C |
| Antimony | < 3.6 | 3.6 | mg/Kg | 03/05/15 | LK | SW6010C |
| Selenium | < 1.4 | 1.4 | mg/Kg | 03/05/15 | LK | SW6010C |
| Thallium | < 3.2 | 3.2 | mg/Kg | 03/05/15 | LK | SW6010C |
| Vanadium | 42.0 | 0.36 | mg/Kg | 03/05/15 | LK | SW6010C |
| Zinc | 71.0 | 0.36 | mg/Kg | 03/05/15 | LK | SW6010C |
| Percent Solid | 87 | | % | 03/04/15 | I | SW846-%Solid |
| Total Cyanide | < 0.48 | 0.48 | mg/Kg | 03/04/15 | O/B/E | SW9012B |
| Soil Extraction for PCB | Completed | | | 03/04/15 | CC/H | SW3545A |
| Soil Extraction for SVOA | Completed | | | 03/04/15 | JJ/VH | SW3545A |
| Mercury Digestion | Completed | | | 03/05/15 | I/I | SW7471B |

Project ID: 109 MARBLEDALE RD., TUCKAHOE, NY
Client ID: TB-9 (2-4)

Phoenix I.D.: BH79486

| Parameter | Result | RL/ PQL | Units | Date/Time | By | Reference |
|---|---|---|---|---|---|---|
| Total Metals Digest | Completed | | | 03/04/15 | CB/AG | SW3050B |
| **Polychlorinated Biphenyls** | | | | | | |
| PCB-1016 | ND | 74 | ug/Kg | 03/05/15 | KCA | SW8082A |
| PCB-1221 | ND | 74 | ug/Kg | 03/05/15 | KCA | SW8082A |
| PCB-1232 | ND | 74 | ug/Kg | 03/05/15 | KCA | SW8082A |
| PCB-1242 | ND | 74 | ug/Kg | 03/05/15 | KCA | SW8082A |
| PCB-1248 | ND | 74 | ug/Kg | 03/05/15 | KCA | SW8082A |
| PCB-1254 | ND | 74 | ug/Kg | 03/05/15 | KCA | SW8082A |
| PCB-1260 | ND | 74 | ug/Kg | 03/05/15 | KCA | SW8082A |
| PCB-1262 | ND | 74 | ug/Kg | 03/05/15 | KCA | SW8082A |
| PCB-1268 | ND | 74 | ug/Kg | 03/05/15 | KCA | SW8082A |
| **QA/QC Surrogates** | | | | | | |
| % DCBP | 65 | | % | 03/05/15 | KCA | 30 - 150 % |
| % TCMX | 68 | | % | 03/05/15 | KCA | 30 - 150 % |
| **Volatiles (TCL)** | | | | | | |
| 1,1,1-Trichloroethane | ND | 8.1 | ug/kg | 03/05/15 | JLI | SW8260C |
| 1,1,2,2-Tetrachloroethane | ND | 8.1 | ug/kg | 03/05/15 | JLI | SW8260C |
| 1,1,2-Trichloroethane | ND | 8.1 | ug/kg | 03/05/15 | JLI | SW8260C |
| 1,1-Dichloroethane | ND | 8.1 | ug/kg | 03/05/15 | JLI | SW8260C |
| 1,1-Dichloroethene | ND | 8.1 | ug/kg | 03/05/15 | JLI | SW8260C |
| 1,2,3-Trichlorobenzene | ND | 360 | ug/kg | 03/05/15 | JLI | SW8260C |
| 1,2,4-Trichlorobenzene | ND | 360 | ug/kg | 03/05/15 | JLI | SW8260C |
| 1,2-Dibromo-3-chloropropane | ND | 360 | ug/kg | 03/05/15 | JLI | SW8260C |
| 1,2-Dibromoethane | ND | 8.1 | ug/kg | 03/05/15 | JLI | SW8260C |
| 1,2-Dichlorobenzene | ND | 360 | ug/kg | 03/05/15 | JLI | SW8260C |
| 1,2-Dichloroethane | ND | 8.1 | ug/kg | 03/05/15 | JLI | SW8260C |
| 1,2-Dichloropropane | ND | 8.1 | ug/kg | 03/05/15 | JLI | SW8260C |
| 1,3-Dichlorobenzene | ND | 360 | ug/kg | 03/05/15 | JLI | SW8260C |
| 1,4-Dichlorobenzene | ND | 360 | ug/kg | 03/05/15 | JLI | SW8260C |
| 2-Hexanone | ND | 41 | ug/kg | 03/05/15 | JLI | SW8260C |
| 4-Methyl-2-pentanone | ND | 41 | ug/kg | 03/05/15 | JLI | SW8260C |
| Acetone | ND | 50 | ug/kg | 03/05/15 | JLI | SW8260C |
| Benzene | ND | 8.1 | ug/kg | 03/05/15 | JLI | SW8260C |
| Bromochloromethane | ND | 8.1 | ug/kg | 03/05/15 | JLI | SW8260C |
| Bromodichloromethane | ND | 8.1 | ug/kg | 03/05/15 | JLI | SW8260C |
| Bromoform | ND | 8.1 | ug/kg | 03/05/15 | JLI | SW8260C |
| Bromomethane | ND | 8.1 | ug/kg | 03/05/15 | JLI | SW8260C |
| Carbon Disulfide | ND | 8.1 | ug/kg | 03/05/15 | JLI | SW8260C |
| Carbon tetrachloride | ND | 8.1 | ug/kg | 03/05/15 | JLI | SW8260C |
| Chlorobenzene | ND | 20 | ug/kg | 03/05/15 | JLI | SW8260C |
| Chloroethane | ND | 8.1 | ug/kg | 03/05/15 | JLI | SW8260C |
| Chloroform | ND | 8.1 | ug/kg | 03/05/15 | JLI | SW8260C |
| Chloromethane | ND | 8.1 | ug/kg | 03/05/15 | JLI | SW8260C |
| cis-1,2-Dichloroethene | ND | 8.1 | ug/kg | 03/05/15 | JLI | SW8260C |
| cis-1,3-Dichloropropene | ND | 8.1 | ug/kg | 03/05/15 | JLI | SW8260C |
| Cyclohexane | ND | 8.1 | ug/kg | 03/05/15 | JLI | SW8260C |
| Dibromochloromethane | ND | 8.1 | ug/kg | 03/05/15 | JLI | SW8260C |
| Dichlorodifluoromethane | ND | 8.1 | ug/kg | 03/05/15 | JLI | SW8260C |

Project ID: 109 MARBLEDALE RD., TUCKAHOE, NY
Client ID: TB-9 (2-4)

Phoenix I.D.: BH79486

| Parameter | Result | RL/ PQL | Units | Date/Time | By | Reference |
|---|---|---|---|---|---|---|
| Ethylbenzene | ND | 8.1 | ug/kg | 03/05/15 | JLI | SW8260C |
| Isopropylbenzene | ND | 360 | ug/kg | 03/05/15 | JLI | SW8260C |
| m&p-Xylene | ND | 8.1 | ug/kg | 03/05/15 | JLI | SW8260C |
| Methyl ethyl ketone | ND | 49 | ug/kg | 03/05/15 | JLI | SW8260C |
| Methyl t-butyl ether (MTBE) | ND | 16 | ug/kg | 03/05/15 | JLI | SW8260C |
| Methylacetate | ND | 6.5 | ug/kg | 03/05/15 | JLI | SW8260C |
| Methylcyclohexane | ND | 8.1 | ug/kg | 03/05/15 | JLI | SW8260C |
| Methylene chloride | ND | 8.1 | ug/kg | 03/05/15 | JLI | SW8260C |
| o-Xylene | ND | 8.1 | ug/kg | 03/05/15 | JLI | SW8260C |
| Styrene | ND | 8.1 | ug/kg | 03/05/15 | JLI | SW8260C |
| Tetrachloroethene | ND | 8.1 | ug/kg | 03/05/15 | JLI | SW8260C |
| Toluene | ND | 8.1 | ug/kg | 03/05/15 | JLI | SW8260C |
| Total Xylenes | ND | 8.1 | ug/kg | 03/05/15 | JLI | SW8260C |
| trans-1,2-Dichloroethene | ND | 8.1 | ug/kg | 03/05/15 | JLI | SW8260C |
| trans-1,3-Dichloropropene | ND | 8.1 | ug/kg | 03/05/15 | JLI | SW8260C |
| Trichloroethene | ND | 8.1 | ug/kg | 03/05/15 | JLI | SW8260C |
| Trichlorofluoromethane | ND | 8.1 | ug/kg | 03/05/15 | JLI | SW8260C |
| Trichlorotrifluoroethane | ND | 8.1 | ug/kg | 03/05/15 | JLI | SW8260C |
| Vinyl chloride | ND | 8.1 | ug/kg | 03/05/15 | JLI | SW8260C |
| **QA/QC Surrogates** | | | | | | |
| % 1,2-dichlorobenzene-d4 | 95 | | % | 03/05/15 | JLI | 70 - 130 % |
| % Bromofluorobenzene | 88 | | % | 03/05/15 | JLI | 70 - 130 % |
| % Dibromofluoromethane | 99 | | % | 03/05/15 | JLI | 70 - 130 % |
| % Toluene-d8 | 91 | | % | 03/05/15 | JLI | 70 - 130 % |
| **1,4-dioxane** | | | | | | |
| 1,4-dioxane | ND | 100 | ug/kg | 03/05/15 | JLI | SW8260C |
| Volatile Library Search Top 10 | Completed | | | 03/05/15 | JLI | |
| **Semivolatiles** | | | | | | |
| 1,1-Biphenyl | ND | 530 | ug/Kg | 03/05/15 | DD | SW8270D |
| 1,2,4,5-Tetrachlorobenzene | ND | 530 | ug/Kg | 03/05/15 | DD | SW8270D |
| 2,3,4,6-tetrachlorophenol | ND | 530 | ug/Kg | 03/05/15 | DD | SW8270D |
| 2,4,5-Trichlorophenol | ND | 530 | ug/Kg | 03/05/15 | DD | SW8270D |
| 2,4,6-Trichlorophenol | ND | 530 | ug/Kg | 03/05/15 | DD | SW8270D |
| 2,4-Dichlorophenol | ND | 530 | ug/Kg | 03/05/15 | DD | SW8270D |
| 2,4-Dimethylphenol | ND | 530 | ug/Kg | 03/05/15 | DD | SW8270D |
| 2,4-Dinitrophenol | ND | 1200 | ug/Kg | 03/05/15 | DD | SW8270D |
| 2,4-Dinitrotoluene | ND | 530 | ug/Kg | 03/05/15 | DD | SW8270D |
| 2,6-Dinitrotoluene | ND | 530 | ug/Kg | 03/05/15 | DD | SW8270D |
| 2-Chloronaphthalene | ND | 530 | ug/Kg | 03/05/15 | DD | SW8270D |
| 2-Chlorophenol | ND | 530 | ug/Kg | 03/05/15 | DD | SW8270D |
| 2-Methylnaphthalene | ND | 530 | ug/Kg | 03/05/15 | DD | SW8270D |
| 2-Methylphenol (o-cresol) | ND | 330 | ug/Kg | 03/05/15 | DD | SW8270D |
| 2-Nitroaniline | ND | 1200 | ug/Kg | 03/05/15 | DD | SW8270D |
| 2-Nitrophenol | ND | 530 | ug/Kg | 03/05/15 | DD | SW8270D |
| 3&4-Methylphenol (m&p-cresol) | ND | 760 | ug/Kg | 03/05/15 | DD | SW8270D 1 |
| 3,3'-Dichlorobenzidine | ND | 920 | ug/Kg | 03/05/15 | DD | SW8270D |
| 3-Nitroaniline | ND | 1200 | ug/Kg | 03/05/15 | DD | SW8270D |

Project ID: 109 MARBLEDALE RD., TUCKAHOE, NY
Client ID: TB-9 (2-4)

Phoenix I.D.: BH79486

| Parameter | Result | RL/ PQL | Units | Date/Time | By | Reference | |
|---|---|---|---|---|---|---|---|
| 4,6-Dinitro-2-methylphenol | ND | 2200 | ug/Kg | 03/05/15 | DD | SW8270D | |
| 4-Bromophenyl phenyl ether | ND | 760 | ug/Kg | 03/05/15 | DD | SW8270D | |
| 4-Chloro-3-methylphenol | ND | 530 | ug/Kg | 03/05/15 | DD | SW8270D | |
| 4-Chloroaniline | ND | 530 | ug/Kg | 03/05/15 | DD | SW8270D | |
| 4-Chlorophenyl phenyl ether | ND | 530 | ug/Kg | 03/05/15 | DD | SW8270D | |
| 4-Nitroaniline | ND | 1200 | ug/Kg | 03/05/15 | DD | SW8270D | |
| 4-Nitrophenol | ND | 2200 | ug/Kg | 03/05/15 | DD | SW8270D | |
| Acenaphthene | ND | 530 | ug/Kg | 03/05/15 | DD | SW8270D | |
| Acenaphthylene | ND | 530 | ug/Kg | 03/05/15 | DD | SW8270D | |
| Acetophenone | ND | 530 | ug/Kg | 03/05/15 | DD | SW8270D | |
| Anthracene | ND | 530 | ug/Kg | 03/05/15 | DD | SW8270D | |
| Atrazine | ND | 530 | ug/Kg | 03/05/15 | DD | SW8270D | |
| Benz(a)anthracene | 1200 | 530 | ug/Kg | 03/05/15 | DD | SW8270D | |
| Benzaldehyde | ND | 530 | ug/Kg | 03/05/15 | DD | SW8270D | |
| Benzo(a)pyrene | 1200 | 530 | ug/Kg | 03/05/15 | DD | SW8270D | |
| Benzo(b)fluoranthene | 1500 | 530 | ug/Kg | 03/05/15 | DD | SW8270D | |
| Benzo(ghi)perylene | ND | 530 | ug/Kg | 03/05/15 | DD | SW8270D | |
| Benzo(k)fluoranthene | 600 | 530 | ug/Kg | 03/05/15 | DD | SW8270D | |
| Benzyl butyl phthalate | ND | 530 | ug/Kg | 03/05/15 | DD | SW8270D | |
| Bis(2-chloroethoxy)methane | ND | 530 | ug/Kg | 03/05/15 | DD | SW8270D | |
| Bis(2-chloroethyl)ether | ND | 760 | ug/Kg | 03/05/15 | DD | SW8270D | |
| Bis(2-chloroisopropyl)ether | ND | 530 | ug/Kg | 03/05/15 | DD | SW8270D | 1 |
| Bis(2-ethylhexyl)phthalate | 770 | 530 | ug/Kg | 03/05/15 | DD | SW8270D | |
| Caprolactam | ND | 530 | ug/Kg | 03/05/15 | DD | SW8270D | |
| Carbazole | ND | 2200 | ug/Kg | 03/05/15 | DD | SW8270D | |
| Chrysene | 1200 | 530 | ug/Kg | 03/05/15 | DD | SW8270D | |
| Dibenz(a,h)anthracene | ND | 330 | ug/Kg | 03/05/15 | DD | SW8270D | |
| Dibenzofuran | ND | 530 | ug/Kg | 03/05/15 | DD | SW8270D | |
| Diethyl phthalate | ND | 530 | ug/Kg | 03/05/15 | DD | SW8270D | |
| Dimethylphthalate | ND | 530 | ug/Kg | 03/05/15 | DD | SW8270D | |
| Di-n-butylphthalate | ND | 530 | ug/Kg | 03/05/15 | DD | SW8270D | |
| Di-n-octylphthalate | ND | 530 | ug/Kg | 03/05/15 | DD | SW8270D | |
| Fluoranthene | 1900 | 530 | ug/Kg | 03/05/15 | DD | SW8270D | |
| Fluorene | ND | 530 | ug/Kg | 03/05/15 | DD | SW8270D | |
| Hexachlorobenzene | ND | 530 | ug/Kg | 03/05/15 | DD | SW8270D | |
| Hexachlorobutadiene | ND | 530 | ug/Kg | 03/05/15 | DD | SW8270D | |
| Hexachlorocyclopentadiene | ND | 530 | ug/Kg | 03/05/15 | DD | SW8270D | |
| Hexachloroethane | ND | 530 | ug/Kg | 03/05/15 | DD | SW8270D | |
| Indeno(1,2,3-cd)pyrene | ND | 500 | ug/Kg | 03/05/15 | DD | SW8270D | |
| Isophorone | ND | 530 | ug/Kg | 03/05/15 | DD | SW8270D | |
| Naphthalene | ND | 530 | ug/Kg | 03/05/15 | DD | SW8270D | |
| Nitrobenzene | ND | 530 | ug/Kg | 03/05/15 | DD | SW8270D | |
| N-Nitrosodimethylamine | ND | 760 | ug/Kg | 03/05/15 | DD | SW8270D | |
| N-Nitrosodi-n-propylamine | ND | 530 | ug/Kg | 03/05/15 | DD | SW8270D | |
| N-Nitrosodiphenylamine | ND | 760 | ug/Kg | 03/05/15 | DD | SW8270D | |
| Pentachlorophenol | ND | 760 | ug/Kg | 03/05/15 | DD | SW8270D | |
| Phenanthrene | 1700 | 530 | ug/Kg | 03/05/15 | DD | SW8270D | |
| Phenol | ND | 330 | ug/Kg | 03/05/15 | DD | SW8270D | |
| Pyrene | 1600 | 530 | ug/Kg | 03/05/15 | DD | SW8270D | |

Project ID: 109 MARBLEDALE RD., TUCKAHOE, NY
Client ID: TB-9 (2-4)

Phoenix I.D.: BH79486

| Parameter | Result | RL/ PQL | Units | Date/Time | By | Reference |
|---|---|---|---|---|---|---|
| **QA/QC Surrogates** | | | | | | |
| % 2,4,6-Tribromophenol | 81 | | % | 03/05/15 | DD | 30 - 130 % |
| % 2-Fluorobiphenyl | 74 | | % | 03/05/15 | DD | 30 - 130 % |
| % 2-Fluorophenol | 66 | | % | 03/05/15 | DD | 30 - 130 % |
| % Nitrobenzene-d5 | 82 | | % | 03/05/15 | DD | 30 - 130 % |
| % Phenol-d5 | 66 | | % | 03/05/15 | DD | 30 - 130 % |
| % Terphenyl-d14 | 61 | | % | 03/05/15 | DD | 30 - 130 % |
| SVOA Library Search Top 15 | Completed | | | 03/06/15 | DD | |

1 = This parameter is not certified by NY NELAC for this matrix. NY NELAC does not offer certification for all parameters at this time.

**RL/PQL=Reporting/Practical Quantitation Level (Equivalent to NELAC LOQ, Limit of Quanitation) ND=Not Detected BRL=Below Reporting Level**

## Comments:

Please be advised that the NY 375 soil criteria for chromium are based on hexavalent chromium and trivalent chromium.

Semi-Volatile Comment:
Due to a matrix interference and/or the presence of a large amount of non-target material in the sample, a dilution was required resulting in an elevated RL for the semivolatile analysis.

All soils, solids and sludges are reported on a dry weight basis unless otherwise noted in the sample comments.

If there are any questions regarding this data, please call Phoenix Client Services at extension 200.
This report must not be reproduced except in full as defined by the attached chain of custody.

**Phyllis Shiller, Laboratory Director**
**March 16, 2015**
**Reviewed and Released by: Phyllis Shiller, Laboratory Director**

PHOENIX

Environmental Laboratories, Inc.
587 East Middle Turnpike, P.O.Box 370, Manchester, CT 06045
Tel. (860) 645-1102 Fax (860) 645-0823

ACCREDITED IN ACCORDANCE WITH nelac NY # 11301

# Analysis Report

March 16, 2015

FOR: Attn: Mr. Tim Carr
HydroEnvironmental Solutions, Inc.
One Deans Bridge Rd
Somers NY 10589

| Sample Information | | Custody Information | | Date | Time |
|---|---|---|---|---|---|
| Matrix: | SOIL | Collected by: | | 03/02/15 | 12:00 |
| Location Code: | HESNY-TUCK | Received by: | LB | 03/04/15 | 16:20 |
| Rush Request: | 72 Hour | Analyzed by: | see "By" below | | |
| P.O.#: | | | | | |

## Laboratory Data

SDG ID: GBH79483
Phoenix ID: BH79487

Project ID: 109 MARBLEDALE RD., TUCKAHOE, NY
Client ID: TB-9 (7-9)

| Parameter | Result | RL/ PQL | Units | Date/Time | By | Reference |
|---|---|---|---|---|---|---|
| Silver | < 0.40 | 0.40 | mg/Kg | 03/05/15 | LK | SW6010C |
| Aluminum | 8160 | 60 | mg/Kg | 03/05/15 | LK | SW6010C |
| Arsenic | 4.0 | 0.8 | mg/Kg | 03/05/15 | LK | SW6010C |
| Barium | 57.9 | 0.40 | mg/Kg | 03/05/15 | LK | SW6010C |
| Beryllium | < 0.32 | 0.32 | mg/Kg | 03/05/15 | LK | SW6010C |
| Calcium | 62400 | 60 | mg/Kg | 03/05/15 | LK | SW6010C |
| Cadmium | < 0.40 | 0.40 | mg/Kg | 03/05/15 | LK | SW6010C |
| Cobalt | 7.28 | 0.40 | mg/Kg | 03/05/15 | LK | SW6010C |
| Chromium | 26.0 | 0.40 | mg/Kg | 03/05/15 | LK | SW6010C |
| Copper | 28.0 | 0.40 | mg/kg | 03/05/15 | LK | SW6010C |
| Iron | 13600 | 60 | mg/Kg | 03/05/15 | LK | SW6010C |
| Mercury | 0.05 | 0.03 | mg/Kg | 03/05/15 | MA | SW7471B |
| Potassium | 1860 | 6.0 | mg/Kg | 03/05/15 | LK | SW6010C |
| Magnesium | 30000 | 60 | mg/Kg | 03/05/15 | LK | SW6010C |
| Manganese | 208 | 4.0 | mg/Kg | 03/05/15 | LK | SW6010C |
| Sodium | 321 | 6.0 | mg/Kg | 03/05/15 | LK | SW6010C |
| Nickel | 16.3 | 0.40 | mg/Kg | 03/05/15 | LK | SW6010C |
| Lead | 40.6 | 0.40 | mg/Kg | 03/05/15 | LK | SW6010C |
| Antimony | < 4.0 | 4.0 | mg/Kg | 03/05/15 | LK | SW6010C |
| Selenium | < 1.6 | 1.6 | mg/Kg | 03/05/15 | LK | SW6010C |
| Thallium | < 3.6 | 3.6 | mg/Kg | 03/05/15 | LK | SW6010C |
| Vanadium | 36.5 | 0.40 | mg/Kg | 03/05/15 | LK | SW6010C |
| Zinc | 48.1 | 0.40 | mg/Kg | 03/05/15 | LK | SW6010C |
| Percent Solid | 86 | | % | 03/04/15 | I | SW846-%Solid |
| Total Cyanide | < 0.58 | 0.58 | mg/Kg | 03/04/15 | O/B/E | SW9012B |
| Soil Extraction for PCB | Completed | | | 03/04/15 | CC/H | SW3545A |
| Soil Extraction for SVOA | Completed | | | 03/04/15 | JJ/VH | SW3545A |
| Mercury Digestion | Completed | | | 03/05/15 | I/I | SW7471B |

Project ID: 109 MARBLEDALE RD., TUCKAHOE, NY
Client ID: TB-9 (7-9)

Phoenix I.D.: BH79487

| Parameter | Result | RL/ PQL | Units | Date/Time | By | Reference |
|---|---|---|---|---|---|---|
| Total Metals Digest | Completed | | | 03/04/15 | CB/AG | SW3050B |
| **Polychlorinated Biphenyls** | | | | | | |
| PCB-1016 | ND | 77 | ug/Kg | 03/05/15 | KCA | SW8082A |
| PCB-1221 | ND | 77 | ug/Kg | 03/05/15 | KCA | SW8082A |
| PCB-1232 | ND | 77 | ug/Kg | 03/05/15 | KCA | SW8082A |
| PCB-1242 | ND | 77 | ug/Kg | 03/05/15 | KCA | SW8082A |
| PCB-1248 | ND | 77 | ug/Kg | 03/05/15 | KCA | SW8082A |
| PCB-1254 | ND | 77 | ug/Kg | 03/05/15 | KCA | SW8082A |
| PCB-1260 | ND | 77 | ug/Kg | 03/05/15 | KCA | SW8082A |
| PCB-1262 | ND | 77 | ug/Kg | 03/05/15 | KCA | SW8082A |
| PCB-1268 | ND | 77 | ug/Kg | 03/05/15 | KCA | SW8082A |
| **QA/QC Surrogates** | | | | | | |
| % DCBP | 64 | | % | 03/05/15 | KCA | 30 - 150 % |
| % TCMX | 69 | | % | 03/05/15 | KCA | 30 - 150 % |
| **Volatiles (TCL)** | | | | | | |
| 1,1,1-Trichloroethane | ND | 8.1 | ug/kg | 03/05/15 | JLI | SW8260C |
| 1,1,2,2-Tetrachloroethane | ND | 8.1 | ug/kg | 03/05/15 | JLI | SW8260C |
| 1,1,2-Trichloroethane | ND | 8.1 | ug/kg | 03/05/15 | JLI | SW8260C |
| 1,1-Dichloroethane | ND | 8.1 | ug/kg | 03/05/15 | JLI | SW8260C |
| 1,1-Dichloroethene | ND | 8.1 | ug/kg | 03/05/15 | JLI | SW8260C |
| 1,2,3-Trichlorobenzene | ND | 360 | ug/kg | 03/05/15 | JLI | SW8260C |
| 1,2,4-Trichlorobenzene | ND | 360 | ug/kg | 03/05/15 | JLI | SW8260C |
| 1,2-Dibromo-3-chloropropane | ND | 360 | ug/kg | 03/05/15 | JLI | SW8260C |
| 1,2-Dibromoethane | ND | 8.1 | ug/kg | 03/05/15 | JLI | SW8260C |
| 1,2-Dichlorobenzene | ND | 360 | ug/kg | 03/05/15 | JLI | SW8260C |
| 1,2-Dichloroethane | ND | 8.1 | ug/kg | 03/05/15 | JLI | SW8260C |
| 1,2-Dichloropropane | ND | 8.1 | ug/kg | 03/05/15 | JLI | SW8260C |
| 1,3-Dichlorobenzene | ND | 360 | ug/kg | 03/05/15 | JLI | SW8260C |
| 1,4-Dichlorobenzene | ND | 360 | ug/kg | 03/05/15 | JLI | SW8260C |
| 2-Hexanone | ND | 41 | ug/kg | 03/05/15 | JLI | SW8260C |
| 4-Methyl-2-pentanone | ND | 41 | ug/kg | 03/05/15 | JLI | SW8260C |
| Acetone | 61 | 81 | ug/kg | 03/05/15 | JLI | SW8260C |
| Benzene | 6.9 | 8.1 | ug/kg | 03/05/15 | JLI | SW8260C |
| Bromochloromethane | ND | 8.1 | ug/kg | 03/05/15 | JLI | SW8260C |
| Bromodichloromethane | ND | 8.1 | ug/kg | 03/05/15 | JLI | SW8260C |
| Bromoform | ND | 8.1 | ug/kg | 03/05/15 | JLI | SW8260C |
| Bromomethane | ND | 8.1 | ug/kg | 03/05/15 | JLI | SW8260C |
| Carbon Disulfide | ND | 8.1 | ug/kg | 03/05/15 | JLI | SW8260C |
| Carbon tetrachloride | ND | 8.1 | ug/kg | 03/05/15 | JLI | SW8260C |
| Chlorobenzene | ND | 20 | ug/kg | 03/05/15 | JLI | SW8260C |
| Chloroethane | ND | 8.1 | ug/kg | 03/05/15 | JLI | SW8260C |
| Chloroform | ND | 8.1 | ug/kg | 03/05/15 | JLI | SW8260C |
| Chloromethane | ND | 8.1 | ug/kg | 03/05/15 | JLI | SW8260C |
| cis-1,2-Dichloroethene | ND | 8.1 | ug/kg | 03/05/15 | JLI | SW8260C |
| cis-1,3-Dichloropropene | ND | 8.1 | ug/kg | 03/05/15 | JLI | SW8260C |
| Cyclohexane | ND | 8.1 | ug/kg | 03/05/15 | JLI | SW8260C |
| Dibromochloromethane | ND | 8.1 | ug/kg | 03/05/15 | JLI | SW8260C |
| Dichlorodifluoromethane | ND | 8.1 | ug/kg | 03/05/15 | JLI | SW8260C |

Project ID: 109 MARBLEDALE RD., TUCKAHOE, NY
Client ID: TB-9 (7-9)

Phoenix I.D.: BH79487

| Parameter | Result | RL/ PQL | Units | Date/Time | By | Reference |
|---|---|---|---|---|---|---|
| Ethylbenzene | ND | 8.1 | ug/kg | 03/05/15 | JLI | SW8260C |
| Isopropylbenzene | ND | 360 | ug/kg | 03/05/15 | JLI | SW8260C |
| m&p-Xylene | ND | 8.1 | ug/kg | 03/05/15 | JLI | SW8260C |
| Methyl ethyl ketone | ND | 49 | ug/kg | 03/05/15 | JLI | SW8260C |
| Methyl t-butyl ether (MTBE) | ND | 16 | ug/kg | 03/05/15 | JLI | SW8260C |
| Methylacetate | ND | 6.5 | ug/kg | 03/05/15 | JLI | SW8260C |
| Methylcyclohexane | ND | 8.1 | ug/kg | 03/05/15 | JLI | SW8260C |
| Methylene chloride | ND | 8.1 | ug/kg | 03/05/15 | JLI | SW8260C |
| o-Xylene | ND | 8.1 | ug/kg | 03/05/15 | JLI | SW8260C |
| Styrene | ND | 8.1 | ug/kg | 03/05/15 | JLI | SW8260C |
| Tetrachloroethene | ND | 8.1 | ug/kg | 03/05/15 | JLI | SW8260C |
| Toluene | ND | 8.1 | ug/kg | 03/05/15 | JLI | SW8260C |
| Total Xylenes | ND | 8.1 | ug/kg | 03/05/15 | JLI | SW8260C |
| trans-1,2-Dichloroethene | ND | 8.1 | ug/kg | 03/05/15 | JLI | SW8260C |
| trans-1,3-Dichloropropene | ND | 8.1 | ug/kg | 03/05/15 | JLI | SW8260C |
| Trichloroethene | ND | 8.1 | ug/kg | 03/05/15 | JLI | SW8260C |
| Trichlorofluoromethane | ND | 8.1 | ug/kg | 03/05/15 | JLI | SW8260C |
| Trichlorotrifluoroethane | ND | 8.1 | ug/kg | 03/05/15 | JLI | SW8260C |
| Vinyl chloride | ND | 8.1 | ug/kg | 03/05/15 | JLI | SW8260C |
| **QA/QC Surrogates** | | | | | | |
| % 1,2-dichlorobenzene-d4 | 96 | | % | 03/05/15 | JLI | 70 - 130 % |
| % Bromofluorobenzene | 104 | | % | 03/05/15 | JLI | 70 - 130 % |
| % Dibromofluoromethane | 82 | | % | 03/05/15 | JLI | 70 - 130 % |
| % Toluene-d8 | 83 | | % | 03/05/15 | JLI | 70 - 130 % |
| **1,4-dioxane** | | | | | | |
| 1,4-dioxane | ND | 100 | ug/kg | 03/05/15 | JLI | SW8260C |
| Volatile Library Search Top 10 | Completed | | | 03/05/15 | JLI | |
| **Semivolatiles** | | | | | | |
| 1,1-Biphenyl | ND | 530 | ug/Kg | 03/05/15 | DD | SW8270D |
| 1,2,4,5-Tetrachlorobenzene | ND | 530 | ug/Kg | 03/05/15 | DD | SW8270D |
| 2,3,4,6-tetrachlorophenol | ND | 530 | ug/Kg | 03/05/15 | DD | SW8270D |
| 2,4,5-Trichlorophenol | ND | 530 | ug/Kg | 03/05/15 | DD | SW8270D |
| 2,4,6-Trichlorophenol | ND | 530 | ug/Kg | 03/05/15 | DD | SW8270D |
| 2,4-Dichlorophenol | ND | 530 | ug/Kg | 03/05/15 | DD | SW8270D |
| 2,4-Dimethylphenol | ND | 530 | ug/Kg | 03/05/15 | DD | SW8270D |
| 2,4-Dinitrophenol | ND | 1200 | ug/Kg | 03/05/15 | DD | SW8270D |
| 2,4-Dinitrotoluene | ND | 530 | ug/Kg | 03/05/15 | DD | SW8270D |
| 2,6-Dinitrotoluene | ND | 530 | ug/Kg | 03/05/15 | DD | SW8270D |
| 2-Chloronaphthalene | ND | 530 | ug/Kg | 03/05/15 | DD | SW8270D |
| 2-Chlorophenol | ND | 530 | ug/Kg | 03/05/15 | DD | SW8270D |
| 2-Methylnaphthalene | ND | 530 | ug/Kg | 03/05/15 | DD | SW8270D |
| 2-Methylphenol (o-cresol) | ND | 330 | ug/Kg | 03/05/15 | DD | SW8270D |
| 2-Nitroaniline | ND | 1200 | ug/Kg | 03/05/15 | DD | SW8270D |
| 2-Nitrophenol | ND | 530 | ug/Kg | 03/05/15 | DD | SW8270D |
| 3&4-Methylphenol (m&p-cresol) | ND | 760 | ug/Kg | 03/05/15 | DD | SW8270D 1 |
| 3,3'-Dichlorobenzidine | ND | 910 | ug/Kg | 03/05/15 | DD | SW8270D |
| 3-Nitroaniline | ND | 1200 | ug/Kg | 03/05/15 | DD | SW8270D |

Project ID: 109 MARBLEDALE RD., TUCKAHOE, NY
Client ID: TB-9 (7-9)

Phoenix I.D.: BH79487

| Parameter | Result | RL/ PQL | Units | Date/Time | By | Reference | |
|---|---|---|---|---|---|---|---|
| 4,6-Dinitro-2-methylphenol | ND | 2200 | ug/Kg | 03/05/15 | DD | SW8270D | |
| 4-Bromophenyl phenyl ether | ND | 760 | ug/Kg | 03/05/15 | DD | SW8270D | |
| 4-Chloro-3-methylphenol | ND | 530 | ug/Kg | 03/05/15 | DD | SW8270D | |
| 4-Chloroaniline | ND | 530 | ug/Kg | 03/05/15 | DD | SW8270D | |
| 4-Chlorophenyl phenyl ether | ND | 530 | ug/Kg | 03/05/15 | DD | SW8270D | |
| 4-Nitroaniline | ND | 1200 | ug/Kg | 03/05/15 | DD | SW8270D | |
| 4-Nitrophenol | ND | 2200 | ug/Kg | 03/05/15 | DD | SW8270D | |
| Acenaphthene | ND | 530 | ug/Kg | 03/05/15 | DD | SW8270D | |
| Acenaphthylene | ND | 530 | ug/Kg | 03/05/15 | DD | SW8270D | |
| Acetophenone | ND | 530 | ug/Kg | 03/05/15 | DD | SW8270D | |
| Anthracene | 1100 | 530 | ug/Kg | 03/05/15 | DD | SW8270D | |
| Atrazine | ND | 530 | ug/Kg | 03/05/15 | DD | SW8270D | |
| Benz(a)anthracene | 2200 | 530 | ug/Kg | 03/05/15 | DD | SW8270D | |
| Benzaldehyde | ND | 530 | ug/Kg | 03/05/15 | DD | SW8270D | |
| Benzo(a)pyrene | 2000 | 530 | ug/Kg | 03/05/15 | DD | SW8270D | |
| Benzo(b)fluoranthene | 2900 | 530 | ug/Kg | 03/05/15 | DD | SW8270D | |
| Benzo(ghi)perylene | ND | 530 | ug/Kg | 03/05/15 | DD | SW8270D | |
| Benzo(k)fluoranthene | 1100 | 530 | ug/Kg | 03/05/15 | DD | SW8270D | |
| Benzyl butyl phthalate | ND | 530 | ug/Kg | 03/05/15 | DD | SW8270D | |
| Bis(2-chloroethoxy)methane | ND | 530 | ug/Kg | 03/05/15 | DD | SW8270D | |
| Bis(2-chloroethyl)ether | ND | 760 | ug/Kg | 03/05/15 | DD | SW8270D | |
| Bis(2-chloroisopropyl)ether | ND | 530 | ug/Kg | 03/05/15 | DD | SW8270D | 1 |
| Bis(2-ethylhexyl)phthalate | ND | 530 | ug/Kg | 03/05/15 | DD | SW8270D | |
| Caprolactam | ND | 530 | ug/Kg | 03/05/15 | DD | SW8270D | |
| Carbazole | ND | 2200 | ug/Kg | 03/05/15 | DD | SW8270D | |
| Chrysene | 2300 | 530 | ug/Kg | 03/05/15 | DD | SW8270D | |
| Dibenz(a,h)anthracene | ND | 330 | ug/Kg | 03/05/15 | DD | SW8270D | |
| Dibenzofuran | ND | 530 | ug/Kg | 03/05/15 | DD | SW8270D | |
| Diethyl phthalate | ND | 530 | ug/Kg | 03/05/15 | DD | SW8270D | |
| Dimethylphthalate | ND | 530 | ug/Kg | 03/05/15 | DD | SW8270D | |
| Di-n-butylphthalate | ND | 530 | ug/Kg | 03/05/15 | DD | SW8270D | |
| Di-n-octylphthalate | ND | 530 | ug/Kg | 03/05/15 | DD | SW8270D | |
| Fluoranthene | 3700 | 530 | ug/Kg | 03/05/15 | DD | SW8270D | |
| Fluorene | ND | 530 | ug/Kg | 03/05/15 | DD | SW8270D | |
| Hexachlorobenzene | ND | 530 | ug/Kg | 03/05/15 | DD | SW8270D | |
| Hexachlorobutadiene | ND | 530 | ug/Kg | 03/05/15 | DD | SW8270D | |
| Hexachlorocyclopentadiene | ND | 530 | ug/Kg | 03/05/15 | DD | SW8270D | |
| Hexachloroethane | ND | 530 | ug/Kg | 03/05/15 | DD | SW8270D | |
| Indeno(1,2,3-cd)pyrene | ND | 500 | ug/Kg | 03/05/15 | DD | SW8270D | |
| Isophorone | ND | 530 | ug/Kg | 03/05/15 | DD | SW8270D | |
| Naphthalene | ND | 530 | ug/Kg | 03/05/15 | DD | SW8270D | |
| Nitrobenzene | ND | 530 | ug/Kg | 03/05/15 | DD | SW8270D | |
| N-Nitrosodimethylamine | ND | 760 | ug/Kg | 03/05/15 | DD | SW8270D | |
| N-Nitrosodi-n-propylamine | ND | 530 | ug/Kg | 03/05/15 | DD | SW8270D | |
| N-Nitrosodiphenylamine | ND | 760 | ug/Kg | 03/05/15 | DD | SW8270D | |
| Pentachlorophenol | ND | 760 | ug/Kg | 03/05/15 | DD | SW8270D | |
| Phenanthrene | 3600 | 530 | ug/Kg | 03/05/15 | DD | SW8270D | |
| Phenol | ND | 330 | ug/Kg | 03/05/15 | DD | SW8270D | |
| Pyrene | 3000 | 530 | ug/Kg | 03/05/15 | DD | SW8270D | |

Project ID: 109 MARBLEDALE RD., TUCKAHOE, NY
Client ID: TB-9 (7-9)

Phoenix I.D.: BH79487

| Parameter | Result | RL/ PQL | Units | Date/Time | By | Reference |
|---|---|---|---|---|---|---|
| **QA/QC Surrogates** | | | | | | |
| % 2,4,6-Tribromophenol | 68 | | % | 03/05/15 | DD | 30 - 130 % |
| % 2-Fluorobiphenyl | 75 | | % | 03/05/15 | DD | 30 - 130 % |
| % 2-Fluorophenol | 64 | | % | 03/05/15 | DD | 30 - 130 % |
| % Nitrobenzene-d5 | 81 | | % | 03/05/15 | DD | 30 - 130 % |
| % Phenol-d5 | 65 | | % | 03/05/15 | DD | 30 - 130 % |
| % Terphenyl-d14 | 59 | | % | 03/05/15 | DD | 30 - 130 % |
| SVOA Library Search Top 15 | Completed | | | 03/06/15 | DD | |

1 = This parameter is not certified by NY NELAC for this matrix. NY NELAC does not offer certification for all parameters at this time.

**RL/PQL=Reporting/Practical Quantitation Level (Equivalent to NELAC LOQ, Limit of Quanitation) ND=Not Detected BRL=Below Reporting Level**

## Comments:

Please be advised that the NY 375 soil criteria for chromium are based on hexavalent chromium and trivalent chromium.

Volatile Comment:
There was a suppression of the last internal standard in the low level analysis, all affected compounds are reported from the methanol preserved high level analysis which did not exhibit this interference.

Semi-Volatile Comment:
Due to a matrix interference and/or the presence of a large amount of non-target material in the sample, a dilution was required resulting in an elevated RL for the semivolatile analysis.

All soils, solids and sludges are reported on a dry weight basis unless otherwise noted in the sample comments.

If there are any questions regarding this data, please call Phoenix Client Services at extension 200.
This report must not be reproduced except in full as defined by the attached chain of custody.

**Phyllis Shiller, Laboratory Director**
**March 16, 2015**
**Reviewed and Released by: Phyllis Shiller, Laboratory Director**

PHOENIX

Environmental Laboratories, Inc.
587 East Middle Turnpike, P.O.Box 370, Manchester, CT 06045
Tel. (860) 645-1102 Fax (860) 645-0823

ACCREDITED IN ACCORDANCE WITH nelac NY # 11301

# Analysis Report

March 16, 2015

FOR: Attn: Mr. Tim Carr
HydroEnvironmental Solutions, Inc.
One Deans Bridge Rd
Somers NY 10589

| Sample Information | | Custody Information | | Date | Time |
|---|---|---|---|---|---|
| Matrix: | SOIL | Collected by: | | 03/02/15 | 15:00 |
| Location Code: | HESNY-TUCK | Received by: | LB | 03/04/15 | 16:20 |
| Rush Request: | 72 Hour | Analyzed by: | see "By" below | | |
| P.O.#: | | | | | |

## Laboratory Data

SDG ID: GBH79483
Phoenix ID: BH79488

Project ID: 109 MARBLEDALE RD., TUCKAHOE, NY
Client ID: TB-10 (4-6)

| Parameter | Result | RL/ PQL | Units | Date/Time | By | Reference |
|---|---|---|---|---|---|---|
| Silver | < 0.35 | 0.35 | mg/Kg | 03/05/15 | LK | SW6010C |
| Aluminum | 11200 | 53 | mg/Kg | 03/05/15 | LK | SW6010C |
| Arsenic | 3.3 | 0.7 | mg/Kg | 03/05/15 | LK | SW6010C |
| Barium | 73.8 | 0.35 | mg/Kg | 03/05/15 | LK | SW6010C |
| Beryllium | 0.32 | 0.28 | mg/Kg | 03/05/15 | LK | SW6010C |
| Calcium | 24800 | 53 | mg/Kg | 03/05/15 | LK | SW6010C |
| Cadmium | < 0.35 | 0.35 | mg/Kg | 03/05/15 | LK | SW6010C |
| Cobalt | 11.4 | 0.35 | mg/Kg | 03/05/15 | LK | SW6010C |
| Chromium | 24.8 | 0.35 | mg/Kg | 03/05/15 | LK | SW6010C |
| Copper | 57.7 | 0.35 | mg/kg | 03/05/15 | LK | SW6010C |
| Iron | 20700 | 53 | mg/Kg | 03/05/15 | LK | SW6010C |
| Mercury | 0.28 | 0.03 | mg/Kg | 03/05/15 | MA | SW7471B |
| Potassium | 3160 | 5.3 | mg/Kg | 03/05/15 | LK | SW6010C |
| Magnesium | 14500 | 53 | mg/Kg | 03/05/15 | LK | SW6010C |
| Manganese | 349 | 3.5 | mg/Kg | 03/05/15 | LK | SW6010C |
| Sodium | 293 | 5.3 | mg/Kg | 03/05/15 | LK | SW6010C |
| Nickel | 19.0 | 0.35 | mg/Kg | 03/05/15 | LK | SW6010C |
| Lead | 49.3 | 0.35 | mg/Kg | 03/05/15 | LK | SW6010C |
| Antimony | < 3.5 | 3.5 | mg/Kg | 03/05/15 | LK | SW6010C |
| Selenium | < 1.4 | 1.4 | mg/Kg | 03/05/15 | LK | SW6010C |
| Thallium | < 3.2 | 3.2 | mg/Kg | 03/05/15 | LK | SW6010C |
| Vanadium | 37.5 | 0.35 | mg/Kg | 03/05/15 | LK | SW6010C |
| Zinc | 70.8 | 0.35 | mg/Kg | 03/05/15 | LK | SW6010C |
| Percent Solid | 87 | | % | 03/04/15 | I | SW846-%Solid |
| Total Cyanide | < 0.57 | 0.57 | mg/Kg | 03/04/15 | O/B/E | SW9012B |
| Soil Extraction for PCB | Completed | | | 03/04/15 | CC/H | SW3545A |
| Soil Extraction for SVOA | Completed | | | 03/04/15 | JJ/VH | SW3545A |
| Mercury Digestion | Completed | | | 03/05/15 | I/I | SW7471B |

Project ID: 109 MARBLEDALE RD., TUCKAHOE, NY
Client ID: TB-10 (4-6)

Phoenix I.D.: BH79488

| Parameter | Result | RL/ PQL | Units | Date/Time | By | Reference |
|---|---|---|---|---|---|---|
| Total Metals Digest | Completed | | | 03/04/15 | CB/AG | SW3050B |
| **Polychlorinated Biphenyls** | | | | | | |
| PCB-1016 | ND | 76 | ug/Kg | 03/06/15 | AW | SW8082A |
| PCB-1221 | ND | 76 | ug/Kg | 03/06/15 | AW | SW8082A |
| PCB-1232 | ND | 76 | ug/Kg | 03/06/15 | AW | SW8082A |
| PCB-1242 | ND | 76 | ug/Kg | 03/06/15 | AW | SW8082A |
| PCB-1248 | ND | 76 | ug/Kg | 03/06/15 | AW | SW8082A |
| PCB-1254 | ND | 76 | ug/Kg | 03/06/15 | AW | SW8082A |
| PCB-1260 | 190 | 76 | ug/Kg | 03/06/15 | AW | SW8082A |
| PCB-1262 | ND | 76 | ug/Kg | 03/06/15 | AW | SW8082A |
| PCB-1268 | ND | 76 | ug/Kg | 03/06/15 | AW | SW8082A |
| **QA/QC Surrogates** | | | | | | |
| % DCBP | 64 | | % | 03/06/15 | AW | 30 - 150 % |
| % TCMX | 63 | | % | 03/06/15 | AW | 30 - 150 % |
| **Volatiles (TCL)** | | | | | | |
| 1,1,1-Trichloroethane | ND | 8.1 | ug/kg | 03/05/15 | JLI | SW8260C |
| 1,1,2,2-Tetrachloroethane | ND | 8.1 | ug/kg | 03/05/15 | JLI | SW8260C |
| 1,1,2-Trichloroethane | ND | 8.1 | ug/kg | 03/05/15 | JLI | SW8260C |
| 1,1-Dichloroethane | ND | 8.1 | ug/kg | 03/05/15 | JLI | SW8260C |
| 1,1-Dichloroethene | ND | 8.1 | ug/kg | 03/05/15 | JLI | SW8260C |
| 1,2,3-Trichlorobenzene | ND | 360 | ug/kg | 03/05/15 | JLI | SW8260C |
| 1,2,4-Trichlorobenzene | ND | 360 | ug/kg | 03/05/15 | JLI | SW8260C |
| 1,2-Dibromo-3-chloropropane | ND | 360 | ug/kg | 03/05/15 | JLI | SW8260C |
| 1,2-Dibromoethane | ND | 8.1 | ug/kg | 03/05/15 | JLI | SW8260C |
| 1,2-Dichlorobenzene | ND | 360 | ug/kg | 03/05/15 | JLI | SW8260C |
| 1,2-Dichloroethane | ND | 8.1 | ug/kg | 03/05/15 | JLI | SW8260C |
| 1,2-Dichloropropane | ND | 8.1 | ug/kg | 03/05/15 | JLI | SW8260C |
| 1,3-Dichlorobenzene | ND | 360 | ug/kg | 03/05/15 | JLI | SW8260C |
| 1,4-Dichlorobenzene | ND | 360 | ug/kg | 03/05/15 | JLI | SW8260C |
| 2-Hexanone | ND | 41 | ug/kg | 03/05/15 | JLI | SW8260C |
| 4-Methyl-2-pentanone | ND | 41 | ug/kg | 03/05/15 | JLI | SW8260C |
| Acetone | ND | 50 | ug/kg | 03/05/15 | JLI | SW8260C |
| Benzene | 5.9 | 8.1 | ug/kg | 03/05/15 | JLI | SW8260C |
| Bromochloromethane | ND | 8.1 | ug/kg | 03/05/15 | JLI | SW8260C |
| Bromodichloromethane | ND | 8.1 | ug/kg | 03/05/15 | JLI | SW8260C |
| Bromoform | ND | 8.1 | ug/kg | 03/05/15 | JLI | SW8260C |
| Bromomethane | ND | 8.1 | ug/kg | 03/05/15 | JLI | SW8260C |
| Carbon Disulfide | ND | 8.1 | ug/kg | 03/05/15 | JLI | SW8260C |
| Carbon tetrachloride | ND | 8.1 | ug/kg | 03/05/15 | JLI | SW8260C |
| Chlorobenzene | ND | 20 | ug/kg | 03/05/15 | JLI | SW8260C |
| Chloroethane | ND | 8.1 | ug/kg | 03/05/15 | JLI | SW8260C |
| Chloroform | ND | 8.1 | ug/kg | 03/05/15 | JLI | SW8260C |
| Chloromethane | ND | 8.1 | ug/kg | 03/05/15 | JLI | SW8260C |
| cis-1,2-Dichloroethene | ND | 8.1 | ug/kg | 03/05/15 | JLI | SW8260C |
| cis-1,3-Dichloropropene | ND | 8.1 | ug/kg | 03/05/15 | JLI | SW8260C |
| Cyclohexane | ND | 8.1 | ug/kg | 03/05/15 | JLI | SW8260C |
| Dibromochloromethane | ND | 8.1 | ug/kg | 03/05/15 | JLI | SW8260C |
| Dichlorodifluoromethane | ND | 8.1 | ug/kg | 03/05/15 | JLI | SW8260C |

Project ID: 109 MARBLEDALE RD., TUCKAHOE, NY
Client ID: TB-10 (4-6)

Phoenix I.D.: BH79488

| Parameter | Result | RL/ PQL | Units | Date/Time | By | Reference |
|---|---|---|---|---|---|---|
| Ethylbenzene | ND | 8.1 | ug/kg | 03/05/15 | JLI | SW8260C |
| Isopropylbenzene | ND | 360 | ug/kg | 03/05/15 | JLI | SW8260C |
| m&p-Xylene | 8.4 | 8.1 | ug/kg | 03/05/15 | JLI | SW8260C |
| Methyl ethyl ketone | ND | 49 | ug/kg | 03/05/15 | JLI | SW8260C |
| Methyl t-butyl ether (MTBE) | ND | 16 | ug/kg | 03/05/15 | JLI | SW8260C |
| Methylacetate | ND | 6.5 | ug/kg | 03/05/15 | JLI | SW8260C |
| Methylcyclohexane | 4.1 | 8.1 | ug/kg | 03/05/15 | JLI | SW8260C |
| Methylene chloride | ND | 8.1 | ug/kg | 03/05/15 | JLI | SW8260C |
| o-Xylene | 5.1 | 8.1 | ug/kg | 03/05/15 | JLI | SW8260C |
| Styrene | ND | 8.1 | ug/kg | 03/05/15 | JLI | SW8260C |
| Tetrachloroethene | ND | 8.1 | ug/kg | 03/05/15 | JLI | SW8260C |
| Toluene | 4.9 | 8.1 | ug/kg | 03/05/15 | JLI | SW8260C |
| Total Xylenes | 13.5 | 8.1 | ug/kg | 03/05/15 | JLI | SW8260C |
| trans-1,2-Dichloroethene | ND | 8.1 | ug/kg | 03/05/15 | JLI | SW8260C |
| trans-1,3-Dichloropropene | ND | 8.1 | ug/kg | 03/05/15 | JLI | SW8260C |
| Trichloroethene | ND | 8.1 | ug/kg | 03/05/15 | JLI | SW8260C |
| Trichlorofluoromethane | ND | 8.1 | ug/kg | 03/05/15 | JLI | SW8260C |
| Trichlorotrifluoroethane | ND | 8.1 | ug/kg | 03/05/15 | JLI | SW8260C |
| Vinyl chloride | ND | 8.1 | ug/kg | 03/05/15 | JLI | SW8260C |
| **QA/QC Surrogates** | | | | | | |
| % 1,2-dichlorobenzene-d4 | 95 | | % | 03/05/15 | JLI | 70 - 130 % |
| % Bromofluorobenzene | 96 | | % | 03/05/15 | JLI | 70 - 130 % |
| % Dibromofluoromethane | 93 | | % | 03/05/15 | JLI | 70 - 130 % |
| % Toluene-d8 | 95 | | % | 03/05/15 | JLI | 70 - 130 % |
| **1,4-dioxane** | | | | | | |
| 1,4-dioxane | ND | 70 | ug/kg | 03/05/15 | JLI | SW8260C |
| Volatile Library Search Top 10 | Completed | | | 03/05/15 | JLI | |
| **Semivolatiles** | | | | | | |
| 1,1-Biphenyl | ND | 1300 | ug/Kg | 03/05/15 | DD | SW8270D |
| 1,2,4,5-Tetrachlorobenzene | ND | 1300 | ug/Kg | 03/05/15 | DD | SW8270D |
| 2,3,4,6-tetrachlorophenol | ND | 1300 | ug/Kg | 03/05/15 | DD | SW8270D |
| 2,4,5-Trichlorophenol | ND | 1300 | ug/Kg | 03/05/15 | DD | SW8270D |
| 2,4,6-Trichlorophenol | ND | 1300 | ug/Kg | 03/05/15 | DD | SW8270D |
| 2,4-Dichlorophenol | ND | 1300 | ug/Kg | 03/05/15 | DD | SW8270D |
| 2,4-Dimethylphenol | ND | 1300 | ug/Kg | 03/05/15 | DD | SW8270D |
| 2,4-Dinitrophenol | ND | 3000 | ug/Kg | 03/05/15 | DD | SW8270D |
| 2,4-Dinitrotoluene | ND | 1300 | ug/Kg | 03/05/15 | DD | SW8270D |
| 2,6-Dinitrotoluene | ND | 1300 | ug/Kg | 03/05/15 | DD | SW8270D |
| 2-Chloronaphthalene | ND | 1300 | ug/Kg | 03/05/15 | DD | SW8270D |
| 2-Chlorophenol | ND | 1300 | ug/Kg | 03/05/15 | DD | SW8270D |
| 2-Methylnaphthalene | ND | 1300 | ug/Kg | 03/05/15 | DD | SW8270D |
| 2-Methylphenol (o-cresol) | ND | 1300 | ug/Kg | 03/05/15 | DD | SW8270D |
| 2-Nitroaniline | ND | 3000 | ug/Kg | 03/05/15 | DD | SW8270D |
| 2-Nitrophenol | ND | 1300 | ug/Kg | 03/05/15 | DD | SW8270D |
| 3&4-Methylphenol (m&p-cresol) | ND | 1900 | ug/Kg | 03/05/15 | DD | SW8270D 1 |
| 3,3'-Dichlorobenzidine | ND | 2300 | ug/Kg | 03/05/15 | DD | SW8270D |
| 3-Nitroaniline | ND | 3000 | ug/Kg | 03/05/15 | DD | SW8270D |

Project ID: 109 MARBLEDALE RD., TUCKAHOE, NY
Client ID: TB-10 (4-6)

Phoenix I.D.: BH79488

| Parameter | Result | RL/ PQL | Units | Date/Time | By | Reference | |
|---|---|---|---|---|---|---|---|
| 4,6-Dinitro-2-methylphenol | ND | 5500 | ug/Kg | 03/05/15 | DD | SW8270D | |
| 4-Bromophenyl phenyl ether | ND | 1900 | ug/Kg | 03/05/15 | DD | SW8270D | |
| 4-Chloro-3-methylphenol | ND | 1300 | ug/Kg | 03/05/15 | DD | SW8270D | |
| 4-Chloroaniline | ND | 1300 | ug/Kg | 03/05/15 | DD | SW8270D | |
| 4-Chlorophenyl phenyl ether | ND | 1300 | ug/Kg | 03/05/15 | DD | SW8270D | |
| 4-Nitroaniline | ND | 3000 | ug/Kg | 03/05/15 | DD | SW8270D | |
| 4-Nitrophenol | ND | 5500 | ug/Kg | 03/05/15 | DD | SW8270D | |
| Acenaphthene | ND | 1300 | ug/Kg | 03/05/15 | DD | SW8270D | |
| Acenaphthylene | ND | 1300 | ug/Kg | 03/05/15 | DD | SW8270D | |
| Acetophenone | ND | 1300 | ug/Kg | 03/05/15 | DD | SW8270D | |
| Anthracene | 2900 | 1300 | ug/Kg | 03/05/15 | DD | SW8270D | |
| Atrazine | ND | 1300 | ug/Kg | 03/05/15 | DD | SW8270D | |
| Benz(a)anthracene | 4500 | 1300 | ug/Kg | 03/05/15 | DD | SW8270D | |
| Benzaldehyde | ND | 1300 | ug/Kg | 03/05/15 | DD | SW8270D | |
| Benzo(a)pyrene | 4000 | 1300 | ug/Kg | 03/05/15 | DD | SW8270D | |
| Benzo(b)fluoranthene | 5900 | 1300 | ug/Kg | 03/05/15 | DD | SW8270D | |
| Benzo(ghi)perylene | ND | 1300 | ug/Kg | 03/05/15 | DD | SW8270D | |
| Benzo(k)fluoranthene | 2300 | 1300 | ug/Kg | 03/05/15 | DD | SW8270D | |
| Benzyl butyl phthalate | ND | 1300 | ug/Kg | 03/05/15 | DD | SW8270D | |
| Bis(2-chloroethoxy)methane | ND | 1300 | ug/Kg | 03/05/15 | DD | SW8270D | |
| Bis(2-chloroethyl)ether | ND | 1900 | ug/Kg | 03/05/15 | DD | SW8270D | |
| Bis(2-chloroisopropyl)ether | ND | 1300 | ug/Kg | 03/05/15 | DD | SW8270D | 1 |
| Bis(2-ethylhexyl)phthalate | ND | 1300 | ug/Kg | 03/05/15 | DD | SW8270D | |
| Caprolactam | ND | 1300 | ug/Kg | 03/05/15 | DD | SW8270D | |
| Carbazole | ND | 5500 | ug/Kg | 03/05/15 | DD | SW8270D | |
| Chrysene | 4800 | 1300 | ug/Kg | 03/05/15 | DD | SW8270D | |
| Dibenz(a,h)anthracene | ND | 1300 | ug/Kg | 03/05/15 | DD | SW8270D | |
| Dibenzofuran | 1400 | 1300 | ug/Kg | 03/05/15 | DD | SW8270D | |
| Diethyl phthalate | ND | 1300 | ug/Kg | 03/05/15 | DD | SW8270D | |
| Dimethylphthalate | ND | 1300 | ug/Kg | 03/05/15 | DD | SW8270D | |
| Di-n-butylphthalate | ND | 1300 | ug/Kg | 03/05/15 | DD | SW8270D | |
| Di-n-octylphthalate | ND | 1300 | ug/Kg | 03/05/15 | DD | SW8270D | |
| Fluoranthene | 8600 | 1300 | ug/Kg | 03/05/15 | DD | SW8270D | |
| Fluorene | 1800 | 1300 | ug/Kg | 03/05/15 | DD | SW8270D | |
| Hexachlorobenzene | ND | 1300 | ug/Kg | 03/05/15 | DD | SW8270D | |
| Hexachlorobutadiene | ND | 1300 | ug/Kg | 03/05/15 | DD | SW8270D | |
| Hexachlorocyclopentadiene | ND | 1300 | ug/Kg | 03/05/15 | DD | SW8270D | |
| Hexachloroethane | ND | 1300 | ug/Kg | 03/05/15 | DD | SW8270D | |
| Indeno(1,2,3-cd)pyrene | ND | 1300 | ug/Kg | 03/05/15 | DD | SW8270D | |
| Isophorone | ND | 1300 | ug/Kg | 03/05/15 | DD | SW8270D | |
| Naphthalene | 2100 | 1300 | ug/Kg | 03/05/15 | DD | SW8270D | |
| Nitrobenzene | ND | 1300 | ug/Kg | 03/05/15 | DD | SW8270D | |
| N-Nitrosodimethylamine | ND | 1900 | ug/Kg | 03/05/15 | DD | SW8270D | |
| N-Nitrosodi-n-propylamine | ND | 1300 | ug/Kg | 03/05/15 | DD | SW8270D | |
| N-Nitrosodiphenylamine | ND | 1900 | ug/Kg | 03/05/15 | DD | SW8270D | |
| Pentachlorophenol | ND | 800 | ug/Kg | 03/05/15 | DD | SW8270D | |
| Phenanthrene | 10000 | 1300 | ug/Kg | 03/05/15 | DD | SW8270D | |
| Phenol | ND | 1300 | ug/Kg | 03/05/15 | DD | SW8270D | |
| Pyrene | 6500 | 1300 | ug/Kg | 03/05/15 | DD | SW8270D | |

Project ID: 109 MARBLEDALE RD., TUCKAHOE, NY

Client ID: TB-10 (4-6)

Phoenix I.D.: BH79488

| Parameter | Result | RL/ PQL | Units | Date/Time | By | Reference |
|---|---|---|---|---|---|---|
| **QA/QC Surrogates** | | | | | | |
| % 2,4,6-Tribromophenol | 69 | | % | 03/05/15 | DD | 30 - 130 % |
| % 2-Fluorobiphenyl | 71 | | % | 03/05/15 | DD | 30 - 130 % |
| % 2-Fluorophenol | 62 | | % | 03/05/15 | DD | 30 - 130 % |
| % Nitrobenzene-d5 | 74 | | % | 03/05/15 | DD | 30 - 130 % |
| % Phenol-d5 | 60 | | % | 03/05/15 | DD | 30 - 130 % |
| % Terphenyl-d14 | 55 | | % | 03/05/15 | DD | 30 - 130 % |
| SVOA Library Search Top 15 | Completed | | | 03/06/15 | DD | |

1 = This parameter is not certified by NY NELAC for this matrix. NY NELAC does not offer certification for all parameters at this time.

**RL/PQL=Reporting/Practical Quantitation Level (Equivalent to NELAC LOQ, Limit of Quanitation) ND=Not Detected BRL=Below Reporting Level**

## Comments:

Please be advised that the NY 375 soil criteria for chromium are based on hexavalent chromium and trivalent chromium.

Semi-Volatile Comment:
Due to a matrix interference and/or the presence of a large amount of non-target material in the sample, a dilution was required resulting in an elevated RL for the semivolatile analysis.

All soils, solids and sludges are reported on a dry weight basis unless otherwise noted in the sample comments.

If there are any questions regarding this data, please call Phoenix Client Services at extension 200.
This report must not be reproduced except in full as defined by the attached chain of custody.

**Phyllis Shiller, Laboratory Director**

**March 16, 2015**

**Reviewed and Released by: Phyllis Shiller, Laboratory Director**

PHOENIX

Environmental Laboratories, Inc.
587 East Middle Turnpike, P.O.Box 370, Manchester, CT 06045
Tel. (860) 645-1102 Fax (860) 645-0823

ACCREDITED IN ACCORDANCE WITH nelac NY # 11301

# Analysis Report

March 16, 2015

FOR: Attn: Mr. Tim Carr
HydroEnvironmental Solutions, Inc.
One Deans Bridge Rd
Somers NY 10589

| Sample Information | | Custody Information | | Date | Time |
|---|---|---|---|---|---|
| Matrix: | SOIL | Collected by: | | 03/02/15 | 10:00 |
| Location Code: | HESNY-TUCK | Received by: | LB | 03/04/15 | 16:20 |
| Rush Request: | 72 Hour | Analyzed by: | see "By" below | | |
| P.O.#: | | | | | |

## Laboratory Data

SDG ID: GBH79483
Phoenix ID: BH79489

Project ID: 109 MARBLEDALE RD., TUCKAHOE, NY
Client ID: TB-10 (32-34)

| Parameter | Result | RL/ PQL | Units | Date/Time | By | Reference |
|---|---|---|---|---|---|---|
| Silver | 5.10 | 0.58 | mg/Kg | 03/05/15 | LK | SW6010C |
| Aluminum | 10300 | 88 | mg/Kg | 03/05/15 | LK | SW6010C |
| Arsenic | 17.1 | 1.2 | mg/Kg | 03/05/15 | LK | SW6010C |
| Barium | 332 | 0.58 | mg/Kg | 03/05/15 | LK | SW6010C |
| Beryllium | < 0.47 | 0.47 | mg/Kg | 03/05/15 | LK | SW6010C |
| Calcium | 86900 | 88 | mg/Kg | 03/05/15 | LK | SW6010C |
| Cadmium | 3.25 | 0.58 | mg/Kg | 03/05/15 | LK | SW6010C |
| Cobalt | 12.3 | 0.58 | mg/Kg | 03/05/15 | LK | SW6010C |
| Chromium | 84.7 | 0.58 | mg/Kg | 03/05/15 | LK | SW6010C |
| Copper | 90.9 | 0.58 | mg/kg | 03/05/15 | LK | SW6010C |
| Iron | 30900 | 88 | mg/Kg | 03/05/15 | LK | SW6010C |
| Mercury | 0.57 | 0.05 | mg/Kg | 03/05/15 | MA | SW7471B |
| Potassium | 2440 | 8.8 | mg/Kg | 03/05/15 | LK | SW6010C |
| Magnesium | 50100 | 88 | mg/Kg | 03/05/15 | LK | SW6010C |
| Manganese | 324 | 5.8 | mg/Kg | 03/05/15 | LK | SW6010C |
| Sodium | 202 | 8.8 | mg/Kg | 03/05/15 | LK | SW6010C |
| Nickel | 35.0 | 0.58 | mg/Kg | 03/05/15 | LK | SW6010C |
| Lead | 570 | 5.8 | mg/Kg | 03/05/15 | LK | SW6010C |
| Antimony | < 7.0 | 7.0 | mg/Kg | 03/05/15 | LK | SW6010C |
| Selenium | < 2.3 | 2.3 | mg/Kg | 03/05/15 | LK | SW6010C |
| Thallium | < 5.3 | 5.3 | mg/Kg | 03/05/15 | LK | SW6010C |
| Vanadium | 52.7 | 0.58 | mg/Kg | 03/05/15 | LK | SW6010C |
| Zinc | 677 | 5.8 | mg/Kg | 03/05/15 | LK | SW6010C |
| Percent Solid | 57 | | % | 03/04/15 | I | SW846-%Solid |
| Total Cyanide | 9.82 | 0.88 | mg/Kg | 03/04/15 | O/B/E | SW9012B |
| Soil Extraction for PCB | Completed | | | 03/04/15 | CC/H | SW3545A |
| Soil Extraction for SVOA | Completed | | | 03/04/15 | JJ/VH | SW3545A |
| Mercury Digestion | Completed | | | 03/05/15 | I/I | SW7471B |

Project ID: 109 MARBLEDALE RD., TUCKAHOE, NY
Client ID: TB-10 (32-34)

Phoenix I.D.: BH79489

| Parameter | Result | RL/ PQL | Units | Date/Time | By | Reference |
|---|---|---|---|---|---|---|
| Total Metals Digest | Completed | | | 03/04/15 | CB/AG | SW3050B |
| **Polychlorinated Biphenyls** | | | | | | |
| PCB-1016 | ND | 120 | ug/Kg | 03/10/15 | AW | SW8082A |
| PCB-1221 | ND | 120 | ug/Kg | 03/10/15 | AW | SW8082A |
| PCB-1232 | ND | 120 | ug/Kg | 03/10/15 | AW | SW8082A |
| PCB-1242 | ND | 120 | ug/Kg | 03/10/15 | AW | SW8082A |
| PCB-1248 | ND | 120 | ug/Kg | 03/10/15 | AW | SW8082A |
| PCB-1254 | ND | 120 | ug/Kg | 03/10/15 | AW | SW8082A |
| PCB-1260 | 130 | 120 | ug/Kg | 03/10/15 | AW | SW8082A |
| PCB-1262 | ND | 120 | ug/Kg | 03/10/15 | AW | SW8082A |
| PCB-1268 | ND | 120 | ug/Kg | 03/10/15 | AW | SW8082A |
| **QA/QC Surrogates** | | | | | | |
| % DCBP | 58 | | % | 03/10/15 | AW | 30 - 150 % |
| % TCMX | 56 | | % | 03/10/15 | AW | 30 - 150 % |
| **Volatiles (TCL)** | | | | | | |
| 1,1,1-Trichloroethane | ND | 8.1 | ug/kg | 03/06/15 | JLI | SW8260C |
| 1,1,2,2-Tetrachloroethane | ND | 8.1 | ug/kg | 03/06/15 | JLI | SW8260C |
| 1,1,2-Trichloroethane | ND | 8.1 | ug/kg | 03/06/15 | JLI | SW8260C |
| 1,1-Dichloroethane | ND | 8.1 | ug/kg | 03/06/15 | JLI | SW8260C |
| 1,1-Dichloroethene | ND | 8.1 | ug/kg | 03/06/15 | JLI | SW8260C |
| 1,2,3-Trichlorobenzene | ND | 360 | ug/kg | 03/06/15 | JLI | SW8260C |
| 1,2,4-Trichlorobenzene | ND | 360 | ug/kg | 03/06/15 | JLI | SW8260C |
| 1,2-Dibromo-3-chloropropane | ND | 360 | ug/kg | 03/06/15 | JLI | SW8260C |
| 1,2-Dibromoethane | ND | 8.1 | ug/kg | 03/06/15 | JLI | SW8260C |
| 1,2-Dichlorobenzene | ND | 360 | ug/kg | 03/06/15 | JLI | SW8260C |
| 1,2-Dichloroethane | ND | 8.1 | ug/kg | 03/06/15 | JLI | SW8260C |
| 1,2-Dichloropropane | ND | 8.1 | ug/kg | 03/06/15 | JLI | SW8260C |
| 1,3-Dichlorobenzene | ND | 360 | ug/kg | 03/06/15 | JLI | SW8260C |
| 1,4-Dichlorobenzene | ND | 360 | ug/kg | 03/06/15 | JLI | SW8260C |
| 2-Hexanone | ND | 41 | ug/kg | 03/06/15 | JLI | SW8260C |
| 4-Methyl-2-pentanone | ND | 41 | ug/kg | 03/06/15 | JLI | SW8260C |
| Acetone | ND | 50 | ug/kg | 03/06/15 | JLI | SW8260C |
| Benzene | 1800 | 8.1 | ug/kg | 03/06/15 | JLI | SW8260C |
| Bromochloromethane | ND | 8.1 | ug/kg | 03/06/15 | JLI | SW8260C |
| Bromodichloromethane | ND | 8.1 | ug/kg | 03/06/15 | JLI | SW8260C |
| Bromoform | ND | 8.1 | ug/kg | 03/06/15 | JLI | SW8260C |
| Bromomethane | ND | 8.1 | ug/kg | 03/06/15 | JLI | SW8260C |
| Carbon Disulfide | ND | 8.1 | ug/kg | 03/06/15 | JLI | SW8260C |
| Carbon tetrachloride | ND | 8.1 | ug/kg | 03/06/15 | JLI | SW8260C |
| Chlorobenzene | ND | 1000 | ug/kg | 03/06/15 | JLI | SW8260C |
| Chloroethane | ND | 8.1 | ug/kg | 03/06/15 | JLI | SW8260C |
| Chloroform | ND | 8.1 | ug/kg | 03/06/15 | JLI | SW8260C |
| Chloromethane | ND | 8.1 | ug/kg | 03/06/15 | JLI | SW8260C |
| cis-1,2-Dichloroethene | ND | 8.1 | ug/kg | 03/06/15 | JLI | SW8260C |
| cis-1,3-Dichloropropene | ND | 8.1 | ug/kg | 03/06/15 | JLI | SW8260C |
| Cyclohexane | ND | 8.1 | ug/kg | 03/06/15 | JLI | SW8260C |
| Dibromochloromethane | ND | 8.1 | ug/kg | 03/06/15 | JLI | SW8260C |
| Dichlorodifluoromethane | ND | 8.1 | ug/kg | 03/06/15 | JLI | SW8260C |

Project ID: 109 MARBLEDALE RD., TUCKAHOE, NY
Client ID: TB-10 (32-34)

Phoenix I.D.: BH79489

| Parameter | Result | RL/ PQL | Units | Date/Time | By | Reference |
|---|---|---|---|---|---|---|
| Ethylbenzene | 1200 | 8.1 | ug/kg | 03/06/15 | JLI | SW8260C |
| Isopropylbenzene | 6900 | 360 | ug/kg | 03/06/15 | JLI | SW8260C |
| m&p-Xylene | 4500 | 8.1 | ug/kg | 03/06/15 | JLI | SW8260C |
| Methyl ethyl ketone | ND | 49 | ug/kg | 03/06/15 | JLI | SW8260C |
| Methyl t-butyl ether (MTBE) | ND | 16 | ug/kg | 03/06/15 | JLI | SW8260C |
| Methylacetate | ND | 6.5 | ug/kg | 03/06/15 | JLI | SW8260C |
| Methylcyclohexane | 9200 | 8.1 | ug/kg | 03/06/15 | JLI | SW8260C |
| Methylene chloride | ND | 8.1 | ug/kg | 03/06/15 | JLI | SW8260C |
| o-Xylene | ND | 8.1 | ug/kg | 03/06/15 | JLI | SW8260C |
| Styrene | ND | 8.1 | ug/kg | 03/06/15 | JLI | SW8260C |
| Tetrachloroethene | ND | 8.1 | ug/kg | 03/06/15 | JLI | SW8260C |
| Toluene | ND | 8.1 | ug/kg | 03/06/15 | JLI | SW8260C |
| Total Xylenes | 4500 | 8.1 | ug/kg | 03/06/15 | JLI | SW8260C |
| trans-1,2-Dichloroethene | ND | 8.1 | ug/kg | 03/06/15 | JLI | SW8260C |
| trans-1,3-Dichloropropene | ND | 8.1 | ug/kg | 03/06/15 | JLI | SW8260C |
| Trichloroethene | ND | 8.1 | ug/kg | 03/06/15 | JLI | SW8260C |
| Trichlorofluoromethane | ND | 8.1 | ug/kg | 03/06/15 | JLI | SW8260C |
| Trichlorotrifluoroethane | ND | 8.1 | ug/kg | 03/06/15 | JLI | SW8260C |
| Vinyl chloride | ND | 8.1 | ug/kg | 03/06/15 | JLI | SW8260C |
| **QA/QC Surrogates** | | | | | | |
| % 1,2-dichlorobenzene-d4 | 99 | | % | 03/06/15 | JLI | 70 - 130 % |
| % Bromofluorobenzene | 96 | | % | 03/06/15 | JLI | 70 - 130 % |
| % Dibromofluoromethane | 99 | | % | 03/06/15 | JLI | 70 - 130 % |
| % Toluene-d8 | 92 | | % | 03/06/15 | JLI | 70 - 130 % |
| **1,4-dioxane** | | | | | | |
| 1,4-dioxane | ND | 17000 | ug/kg | 03/06/15 | JLI | SW8260C |
| Volatile Library Search Top 10 | Completed | | | 03/09/15 | JLI | |
| **Semivolatiles** | | | | | | |
| 1,1-Biphenyl | ND | 810 | ug/Kg | 03/05/15 | DD | SW8270D |
| 1,2,4,5-Tetrachlorobenzene | ND | 810 | ug/Kg | 03/05/15 | DD | SW8270D |
| 2,3,4,6-tetrachlorophenol | ND | 810 | ug/Kg | 03/05/15 | DD | SW8270D |
| 2,4,5-Trichlorophenol | ND | 810 | ug/Kg | 03/05/15 | DD | SW8270D |
| 2,4,6-Trichlorophenol | ND | 810 | ug/Kg | 03/05/15 | DD | SW8270D |
| 2,4-Dichlorophenol | ND | 810 | ug/Kg | 03/05/15 | DD | SW8270D |
| 2,4-Dimethylphenol | ND | 810 | ug/Kg | 03/05/15 | DD | SW8270D |
| 2,4-Dinitrophenol | ND | 1800 | ug/Kg | 03/05/15 | DD | SW8270D |
| 2,4-Dinitrotoluene | ND | 810 | ug/Kg | 03/05/15 | DD | SW8270D |
| 2,6-Dinitrotoluene | ND | 810 | ug/Kg | 03/05/15 | DD | SW8270D |
| 2-Chloronaphthalene | ND | 810 | ug/Kg | 03/05/15 | DD | SW8270D |
| 2-Chlorophenol | ND | 810 | ug/Kg | 03/05/15 | DD | SW8270D |
| 2-Methylnaphthalene | 6500 | 810 | ug/Kg | 03/05/15 | DD | SW8270D |
| 2-Methylphenol (o-cresol) | ND | 330 | ug/Kg | 03/05/15 | DD | SW8270D |
| 2-Nitroaniline | ND | 1800 | ug/Kg | 03/05/15 | DD | SW8270D |
| 2-Nitrophenol | ND | 810 | ug/Kg | 03/05/15 | DD | SW8270D |
| 3&4-Methylphenol (m&p-cresol) | ND | 1200 | ug/Kg | 03/05/15 | DD | SW8270D 1 |
| 3,3'-Dichlorobenzidine | ND | 1400 | ug/Kg | 03/05/15 | DD | SW8270D |
| 3-Nitroaniline | ND | 1800 | ug/Kg | 03/05/15 | DD | SW8270D |

Project ID: 109 MARBLEDALE RD., TUCKAHOE, NY
Client ID: TB-10 (32-34)

Phoenix I.D.: BH79489

| Parameter | Result | RL/ PQL | Units | Date/Time | By | Reference | |
|---|---|---|---|---|---|---|---|
| 4,6-Dinitro-2-methylphenol | ND | 3300 | ug/Kg | 03/05/15 | DD | SW8270D | |
| 4-Bromophenyl phenyl ether | ND | 1200 | ug/Kg | 03/05/15 | DD | SW8270D | |
| 4-Chloro-3-methylphenol | ND | 810 | ug/Kg | 03/05/15 | DD | SW8270D | |
| 4-Chloroaniline | ND | 810 | ug/Kg | 03/05/15 | DD | SW8270D | |
| 4-Chlorophenyl phenyl ether | ND | 810 | ug/Kg | 03/05/15 | DD | SW8270D | |
| 4-Nitroaniline | ND | 1800 | ug/Kg | 03/05/15 | DD | SW8270D | |
| 4-Nitrophenol | ND | 3300 | ug/Kg | 03/05/15 | DD | SW8270D | |
| Acenaphthene | ND | 810 | ug/Kg | 03/05/15 | DD | SW8270D | |
| Acenaphthylene | ND | 810 | ug/Kg | 03/05/15 | DD | SW8270D | |
| Acetophenone | ND | 810 | ug/Kg | 03/05/15 | DD | SW8270D | |
| Anthracene | ND | 810 | ug/Kg | 03/05/15 | DD | SW8270D | |
| Atrazine | ND | 810 | ug/Kg | 03/05/15 | DD | SW8270D | |
| Benz(a)anthracene | 1500 | 810 | ug/Kg | 03/05/15 | DD | SW8270D | |
| Benzaldehyde | ND | 810 | ug/Kg | 03/05/15 | DD | SW8270D | |
| Benzo(a)pyrene | 1200 | 810 | ug/Kg | 03/05/15 | DD | SW8270D | |
| Benzo(b)fluoranthene | 1500 | 810 | ug/Kg | 03/05/15 | DD | SW8270D | |
| Benzo(ghi)perylene | ND | 810 | ug/Kg | 03/05/15 | DD | SW8270D | |
| Benzo(k)fluoranthene | ND | 800 | ug/Kg | 03/05/15 | DD | SW8270D | |
| Benzyl butyl phthalate | ND | 810 | ug/Kg | 03/05/15 | DD | SW8270D | |
| Bis(2-chloroethoxy)methane | ND | 810 | ug/Kg | 03/05/15 | DD | SW8270D | |
| Bis(2-chloroethyl)ether | ND | 1200 | ug/Kg | 03/05/15 | DD | SW8270D | |
| Bis(2-chloroisopropyl)ether | ND | 810 | ug/Kg | 03/05/15 | DD | SW8270D | 1 |
| Bis(2-ethylhexyl)phthalate | 4000 | 810 | ug/Kg | 03/05/15 | DD | SW8270D | |
| Caprolactam | ND | 810 | ug/Kg | 03/05/15 | DD | SW8270D | |
| Carbazole | ND | 3300 | ug/Kg | 03/05/15 | DD | SW8270D | |
| Chrysene | 1500 | 810 | ug/Kg | 03/05/15 | DD | SW8270D | |
| Dibenz(a,h)anthracene | ND | 330 | ug/Kg | 03/05/15 | DD | SW8270D | |
| Dibenzofuran | ND | 810 | ug/Kg | 03/05/15 | DD | SW8270D | |
| Diethyl phthalate | ND | 810 | ug/Kg | 03/05/15 | DD | SW8270D | |
| Dimethylphthalate | ND | 810 | ug/Kg | 03/05/15 | DD | SW8270D | |
| Di-n-butylphthalate | ND | 810 | ug/Kg | 03/05/15 | DD | SW8270D | |
| Di-n-octylphthalate | ND | 810 | ug/Kg | 03/05/15 | DD | SW8270D | |
| Fluoranthene | 2100 | 810 | ug/Kg | 03/05/15 | DD | SW8270D | |
| Fluorene | ND | 810 | ug/Kg | 03/05/15 | DD | SW8270D | |
| Hexachlorobenzene | ND | 810 | ug/Kg | 03/05/15 | DD | SW8270D | |
| Hexachlorobutadiene | ND | 810 | ug/Kg | 03/05/15 | DD | SW8270D | |
| Hexachlorocyclopentadiene | ND | 810 | ug/Kg | 03/05/15 | DD | SW8270D | |
| Hexachloroethane | ND | 810 | ug/Kg | 03/05/15 | DD | SW8270D | |
| Indeno(1,2,3-cd)pyrene | 660 | 500 | ug/Kg | 03/05/15 | DD | SW8270D | |
| Isophorone | ND | 810 | ug/Kg | 03/05/15 | DD | SW8270D | |
| Naphthalene | 7400 | 810 | ug/Kg | 03/05/15 | DD | SW8270D | |
| Nitrobenzene | ND | 810 | ug/Kg | 03/05/15 | DD | SW8270D | |
| N-Nitrosodimethylamine | ND | 1200 | ug/Kg | 03/05/15 | DD | SW8270D | |
| N-Nitrosodi-n-propylamine | ND | 810 | ug/Kg | 03/05/15 | DD | SW8270D | |
| N-Nitrosodiphenylamine | ND | 1200 | ug/Kg | 03/05/15 | DD | SW8270D | |
| Pentachlorophenol | ND | 800 | ug/Kg | 03/05/15 | DD | SW8270D | |
| Phenanthrene | 2100 | 810 | ug/Kg | 03/05/15 | DD | SW8270D | |
| Phenol | ND | 330 | ug/Kg | 03/05/15 | DD | SW8270D | |
| Pyrene | 1700 | 810 | ug/Kg | 03/05/15 | DD | SW8270D | |

Project ID: 109 MARBLEDALE RD., TUCKAHOE, NY
Client ID: TB-10 (32-34)

Phoenix I.D.: BH79489

| Parameter | Result | RL/ PQL | Units | Date/Time | By | Reference |
|---|---|---|---|---|---|---|
| **QA/QC Surrogates** | | | | | | |
| % 2,4,6-Tribromophenol | 93 | | % | 03/05/15 | DD | 30 - 130 % |
| % 2-Fluorobiphenyl | 65 | | % | 03/05/15 | DD | 30 - 130 % |
| % 2-Fluorophenol | 67 | | % | 03/05/15 | DD | 30 - 130 % |
| % Nitrobenzene-d5 | 62 | | % | 03/05/15 | DD | 30 - 130 % |
| % Phenol-d5 | 70 | | % | 03/05/15 | DD | 30 - 130 % |
| % Terphenyl-d14 | 51 | | % | 03/05/15 | DD | 30 - 130 % |
| SVOA Library Search Top 15 | Completed | | | 03/06/15 | DD | |

1 = This parameter is not certified by NY NELAC for this matrix. NY NELAC does not offer certification for all parameters at this time.

**RL/PQL=Reporting/Practical Quantitation Level (Equivalent to NELAC LOQ, Limit of Quanitation) ND=Not Detected BRL=Below Reporting Level**

## Comments:

Please be advised that the NY 375 soil criteria for chromium are based on hexavalent chromium and trivalent chromium.

Semi-Volatile Comment:
Due to a matrix interference and/or the presence of a large amount of non-target material in the sample, a dilution was required resulting in an elevated RL for the semivolatile analysis.

Volatile Comment:
Elevated reporting limits for volatiles due to the presence of non-target compounds.
There is an elevated reporting level for chlorobenzene because there was a problem with high level vials for this compound.

All soils, solids and sludges are reported on a dry weight basis unless otherwise noted in the sample comments.

If there are any questions regarding this data, please call Phoenix Client Services at extension 200.
This report must not be reproduced except in full as defined by the attached chain of custody.

**Phyllis Shiller, Laboratory Director**
**March 16, 2015**
**Reviewed and Released by: Phyllis Shiller, Laboratory Director**

1E
VOLATILE ORGANICS ANALYSIS DATA SHEET
TENTATIVELY IDENTIFIED COMPOUNDS

CLIENT ID
TB-3 (2-4)

Lab Name: Phoenix Environmental Labs  Client: HESNY-TUCK

Lab Code: Phoenix  Case No.:  SAS No.:  SDG No.: GBH79483

Matrix:(soil/water) SOIL  Lab Sample ID: BH79483

Sample wt/vol: 6.33 (g/mL) g  Lab File ID: 0304M45.D

Level: (low/med) Low  Date Received: 03/04/15

% Moisture: not dec. 18  Date Analyzed: 03/05/15

GC Column: rtx-vms  ID: 0.18 (mm)  Dilution Factor: 1

Soil Extract Volume: 5000 (uL)  Soil Aliquot Vol (uL): 5000

Number TICs found: 9  CONCENTRATION UNITS: (ug/L or ug/KG) ug/Kg

| CAS NUMBER | COMPOUND NAME | RT | EST. CONC. | Q |
|---|---|---|---|---|
| 000526-73-8 | Benzene, 1,2,3-trimethyl- | 7.475 | 380 | JN |
| 000535-77-3 | Benzene, 1-methyl-3-(1-methylethyl)- | 8.380 | 450 | JN |
| 000527-84-4 | Benzene, 1-methyl-2-(1-methylethyl)- | 8.443 | 420 | JN |
| | unknown | 8.542 | 490 | JN |
| 000488-23-3 | Benzene, 1,2,3,4-tetramethyl- | 8.893 | 510 | JN |
| 000824-90-8 | 1-Phenyl-1-butene | 9.274 | 360 | JN |
| 000119-64-2 | Naphthalene, 1,2,3,4-tetrahydro- | 9.416 | 340 | JN |
| 006682-71-9 | 1H-Indene, 2,3-dihydro-4,7-dimethyl- | 9.630 | 510 | JN |
| 000091-57-6 | Naphthalene, 2-methyl- | 10.932 | 360 | JN |

1E
VOLATILE ORGANICS ANALYSIS DATA SHEET
TENTATIVELY IDENTIFIED COMPOUNDS

CLIENT ID

TB-4 (24-26)

Lab Name: Phoenix Environmental Labs  Client: HESNY-TUCK

Lab Code: Phoenix  Case No.:  SAS No.:  SDG No.: GBH79483

Matrix:(soil/water) SOIL  Lab Sample ID: BH79484

Sample wt/vol: 3.91 (g/mL) g  Lab File ID: 0304M46.D

Level: (low/med) Low  Date Received: 03/04/15

% Moisture: not dec. 21  Date Analyzed: 03/05/15

GC Column: rtx-vms  ID: 0.18 (mm)  Dilution Factor: 1

Soil Extract Volume: 5000 (uL)  Soil Aliquot Vol (uL): 5000

Number TICs found: 9  CONCENTRATION UNITS: (ug/L or ug/KG) ug/Kg

| CAS NUMBER | COMPOUND NAME | RT | EST. CONC. | Q |
|---|---|---|---|---|
| 000565-59-3 | Pentane, 2,3-dimethyl- | 3.009 | 410 | JN |
| 000590-73-8 | Hexane, 2,2-dimethyl- | 3.244 | 650 | JN |
| 000565-75-3 | Pentane, 2,3,4-trimethyl- | 3.997 | 130 | JN |
| 000560-21-4 | Pentane, 2,3,3-trimethyl- | 4.091 | 140 | JN |
| 000526-73-8 | Benzene, 1,2,3-trimethyl- | 7.470 | 270 | JN |
| 000527-84-4 | Benzene, 1-methyl-2-(1-methylethyl)- | 8.380 | 110 | JN |
| 000535-77-3 | Benzene, 1-methyl-3-(1-methylethyl)- | 8.448 | 92 | JN |
| 000527-53-7 | Benzene, 1,2,3,5-tetramethyl- | 8.893 | 120 | JN |
| | unknown | 9.274 | 150 | JN |

1E
VOLATILE ORGANICS ANALYSIS DATA SHEET
TENTATIVELY IDENTIFIED COMPOUNDS

CLIENT ID
TB-4 (30-32)

Lab Name: Phoenix Environmental Labs  Client: HESNY-TUCK

Lab Code: Phoenix  Case No.:  SAS No.:  SDG No.: GBH79483

Matrix:(soil/water) SOIL  Lab Sample ID: BH79485

Sample wt/vol: 5.87 (g/mL) g  Lab File ID: 0304M47.D

Level: (low/med) Low  Date Received: 03/04/15

% Moisture: not dec. 39  Date Analyzed: 03/05/15

GC Column: rtx-vms  ID: 0.18 (mm)  Dilution Factor: 1

Soil Extract Volume: 5000 (uL)  Soil Aliquot Vol (uL): 5000

Number TICs found: 9  CONCENTRATION UNITS: (ug/L or ug/KG) ug/Kg

| CAS NUMBER | COMPOUND NAME | RT | EST. CONC. | Q |
|---|---|---|---|---|
| 013475-82-6 | Heptane, 2,2,4,6,6-pentamethyl- | 3.244 | 210 | JN |
| 000108-67-8 | Benzene, 1,3,5-trimethyl- | 7.475 | 280 | JN |
| 000527-84-4 | Benzene, 1-methyl-2-(1-methylethyl)- | 8.448 | 180 | JN |
| | unknown | 8.537 | 210 | JN |
| | unknown | 9.097 | 520 | JN |
| 006044-71-9 | Dodecane, 6-methyl- | 9.274 | 500 | JN |
| 006682-71-9 | 1H-Indene, 2,3-dihydro-4,7-dimethyl- | 9.630 | 200 | JN |
| 000629-50-5 | Tridecane | 9.996 | 470 | JN |
| 000544-76-3 | Hexadecane | 10.702 | 310 | JN |

1E
VOLATILE ORGANICS ANALYSIS DATA SHEET
TENTATIVELY IDENTIFIED COMPOUNDS

CLIENT ID
TB-9 (2-4)

Lab Name: Phoenix Environmental Labs  Client: HESNY-TUCK

Lab Code: Phoenix  Case No.:  SAS No.:  SDG No.: GBH79483

Matrix:(soil/water) SOIL  Lab Sample ID: BH79486

Sample wt/vol: 5.43 (g/mL) g  Lab File ID: 0304M48.D

Level: (low/med) Low  Date Received: 03/04/15

% Moisture: not dec. 13  Date Analyzed: 03/05/15

GC Column: rtx-vms  ID: 0.18 (mm)  Dilution Factor: 1

Soil Extract Volume: 5000 (uL)  Soil Aliquot Vol (uL): 5000

Number TICs found: 7  CONCENTRATION UNITS: (ug/L or ug/KG) ug/Kg

| CAS NUMBER | COMPOUND NAME | RT | EST. CONC. | Q |
|---|---|---|---|---|
| 013475-82-6 | Heptane, 2,2,4,6,6-pentamethyl- | 7.308 | 7.5 | JN |
| 017312-83-3 | Undecane, 5,7-dimethyl- | 7.543 | 17 | JN |
| | unknown | 7.773 | 19 | JN |
| | unknown | 8.893 | 6.7 | JN |
| | unknown | 9.280 | 6.2 | JN |
| 000629-50-5 | Tridecane | 9.996 | 7.3 | JN |
| 000629-59-4 | Tetradecane | 10.702 | 6 | JN |

1E
VOLATILE ORGANICS ANALYSIS DATA SHEET
TENTATIVELY IDENTIFIED COMPOUNDS

CLIENT ID
TB-9 (7-9)

Lab Name: Phoenix Environmental Labs  Client: HESNY-TUCK

Lab Code: Phoenix  Case No.:  SAS No.:  SDG No.: GBH79483

Matrix:(soil/water) SOIL  Lab Sample ID: BH79487

Sample wt/vol: 5.61 (g/mL) g  Lab File ID: 0304M49.D

Level: (low/med) Low  Date Received: 03/04/15

% Moisture: not dec. 14  Date Analyzed: 03/05/15

GC Column: rtx-vms  ID: 0.18 (mm)  Dilution Factor: 1

Soil Extract Volume: 5000 (uL)  Soil Aliquot Vol (uL): 5000

Number TICs found: 9  CONCENTRATION UNITS: (ug/L or ug/KG) ug/Kg

| CAS NUMBER | COMPOUND NAME | RT | EST. CONC. | Q |
|---|---|---|---|---|
| 000066-25-1 | Hexanal | 5.556 | 32 | JN |
| 000611-14-3 | Benzene, 1-ethyl-2-methyl- | 7.031 | 14 | JN |
| 000622-96-8 | Benzene, 1-ethyl-4-methyl- | 7.308 | 13 | JN |
| 000620-14-4 | Benzene, 1-ethyl-3-methyl- | 7.475 | 22 | JN |
| | unknown | 8.537 | 17 | JN |
| | unknown | 9.097 | 22 | JN |
| | unknown | 9.280 | 25 | JN |
| 000769-25-5 | Benzene, 2-ethenyl-1,3,5-trimethyl- | 9.630 | 14 | JN |
| 000091-20-3 | Naphthalene | 9.970 | 16 | JN |

1E
VOLATILE ORGANICS ANALYSIS DATA SHEET
TENTATIVELY IDENTIFIED COMPOUNDS

CLIENT ID

TB-10 (4-6)

Lab Name: Phoenix Environmental Labs  Client: HESNY-TUCK

Lab Code: Phoenix  Case No.:  SAS No.:  SDG No.: GBH79483

Matrix:(soil/water) SOIL  Lab Sample ID: BH79488

Sample wt/vol: 8.21 (g/mL) g  Lab File ID: 0304M51.D

Level: (low/med) Low  Date Received: 03/04/15

% Moisture: not dec. 13  Date Analyzed: 03/05/15

GC Column: rtx-vms  ID: 0.18 (mm)  Dilution Factor: 1

Soil Extract Volume: 5000 (uL)  Soil Aliquot Vol (uL): 5000

Number TICs found: 9  CONCENTRATION UNITS: (ug/L or ug/KG) ug/Kg

| CAS NUMBER | COMPOUND NAME | RT | EST. CONC. | Q |
|---|---|---|---|---|
| 000620-14-4 | Benzene, 1-ethyl-3-methyl- | 7.025 | 11 | JN |
| 000526-73-8 | Benzene, 1,2,3-trimethyl- | 7.120 | 9.9 | JN |
| 000108-67-8 | Benzene, 1,3,5-trimethyl- | 7.470 | 19 | JN |
| 000496-11-7 | Indane | 8.003 | 15 | JN |
| | unknown | 9.097 | 7.5 | JN |
| 000824-22-6 | 1H-Indene, 2,3-dihydro-4-methyl- | 9.274 | 13 | JN |
| 000091-20-3 | Naphthalene | 9.960 | 180 | JN |
| 000091-57-6 | Naphthalene, 2-methyl- | 10.817 | 27 | JN |
| 000090-12-0 | Naphthalene, 1-methyl- | 10.932 | 17 | JN |

1E
VOLATILE ORGANICS ANALYSIS DATA SHEET
TENTATIVELY IDENTIFIED COMPOUNDS

CLIENT ID
TB-10 (32-34)

Lab Name: Phoenix Environmental Labs  Client: HESNY-TUCK

Lab Code: Phoenix  Case No.:  SAS No.:  SDG No.: GBH79483

Matrix:(soil/water) SOIL  Lab Sample ID: BH79489

Sample wt/vol: 5.21 (g/mL) g  Lab File ID: 0306_17.D

Level: (low/med) Meth  Date Received: 03/04/15

% Moisture: not dec. 43  Date Analyzed: 03/06/15

GC Column: rtx-vms  ID: 0.18 (mm)  Dilution Factor: 50

Soil Extract Volume: 10000 (uL)  Soil Aliquot Vol (uL): 100

Number TICs found: 10  CONCENTRATION UNITS: (ug/L or ug/KG) ug/Kg

| CAS NUMBER | COMPOUND NAME | RT | EST. CONC. | Q |
|---|---|---|---|---|
| 000594-82-1 | Butane, 2,2,3,3-tetramethyl- | 3.252 | 70000 | JN |
| 000565-75-3 | Pentane, 2,3,4-trimethyl- | 3.949 | 65000 | JN |
| 000609-26-7 | Pentane, 3-ethyl-2-methyl- | 4.038 | 110000 | JN |
| 000103-65-1 | Benzene, propyl- | 6.529 | 69000 | JN |
| 000526-73-8 | Benzene, 1,2,3-trimethyl- | 6.681 | 71000 | JN |
| 000108-67-8 | Benzene, 1,3,5-trimethyl- | 6.990 | 220000 | JN |
| 000496-11-7 | Indane | 7.436 | 50000 | JN |
| 000934-74-7 | Benzene, 1-ethyl-3,5-dimethyl- | 7.499 | 49000 | JN |
| 001758-88-9 | Benzene, 2-ethyl-1,4-dimethyl- | 7.729 | 53000 | JN |
| 000874-41-9 | Benzene, 1-ethyl-2,4-dimethyl- | 7.808 | 44000 | JN |

1F
SEMIVOLATILE ORGANICS ANALYSIS DATA SHEET
TENTATIVELY IDENTIFIED COMPOUNDS

CLIENT ID
TB-3 (2-4)

Lab Name: Phoenix Environmental Labs  Client: HESNY-TUCK

Lab Code: Phoenix  Case No.:  SAS No.:  SDG No.: GBH79483

Matrix:(soil/water) SOIL  Lab Sample ID: BH79483

Sample wt/vol: 15.15 (g/mL) g  Lab File ID: 0305_18.D

Level: (low/med) Low  Date Received: 03/04/15

% Moisture: not dec. 18 decanted:(Y/N) NA  Date Extracted: 03/05/15

GPC Cleanup (Y/N): N pH: NA  Date Analyzed: 3/5/2015

Conc. Extract Volume: 1000 (uL)  Dilution Factor 2

Injection Volume: 2 (uL)

Number TICs found: 8  CONCENTRATION UNITS: (ug/L or ug/KG) ug/Kg

| CAS NUMBER | COMPOUND NAME | RT | EST. CONC. | Q |
|---|---|---|---|---|
| 000123-42-2 | 2-Pentanone, 4-hydroxy-4-methyl- | 3.717 | 1700 | JNA |
| 000095-93-2 | Benzene, 1,2,4,5-tetramethyl- | 6.936 | 1000 | JN |
| 017301-28-9 | Undecane, 3,6-dimethyl- | 7.828 | 1300 | JN |
| | Unknown | 8.007 | 720 | JN |
| 002051-30-1 | Octane, 2,6-dimethyl- | 8.405 | 1800 | JN |
| 004453-90-1 | 1,4-Methanonaphthalene, 1,4-dihydro- | 8.942 | 740 | JN |
| | Unknown | 9.999 | 830 | JN |
| | Unknown | 13.881 | 760 | JN |

1F
SEMIVOLATILE ORGANICS ANALYSIS DATA SHEET
TENTATIVELY IDENTIFIED COMPOUNDS

CLIENT ID

TB-4 (24-26)

Lab Name: Phoenix Environmental Labs  Client: HESNY-TUCK

Lab Code: Phoenix  Case No.:  SAS No.:  SDG No.: GBH79483

Matrix:(soil/water) SOIL  Lab Sample ID: BH79484

Sample wt/vol: 15.1 (g/mL) g  Lab File ID: 0305_19.D

Level: (low/med) Low  Date Received: 03/04/15

% Moisture: not dec. 21 decanted:(Y/N) NA  Date Extracted: 03/05/15

GPC Cleanup (Y/N): N pH: NA  Date Analyzed: 3/5/2015

Conc. Extract Volume: 1000 (uL)  Dilution Factor 2

Injection Volume: 2 (uL)

Number TICs found: 4  CONCENTRATION UNITS: (ug/L or ug/KG) ug/Kg

| CAS NUMBER | COMPOUND NAME | RT | EST. CONC. | Q |
|---|---|---|---|---|
| 000123-42-2 | 2-Pentanone, 4-hydroxy-4-methyl- | 3.719 | 1300 | JNA |
| | Unknown | 16.955 | 3800 | JN |
| | Unknown | 17.279 | 4700 | JN |
| 000630-02-4 | Octacosane | 22.192 | 6700 | JN |

1F
SEMIVOLATILE ORGANICS ANALYSIS DATA SHEET
TENTATIVELY IDENTIFIED COMPOUNDS

CLIENT ID

TB-4 (30-32)

Lab Name: Phoenix Environmental Labs  Client: HESNY-TUCK

Lab Code: Phoenix  Case No.:  SAS No.:  SDG No.: GBH79483

Matrix:(soil/water) SOIL  Lab Sample ID: BH79485

Sample wt/vol: 15.15 (g/mL) g  Lab File ID: 0305_20.D

Level: (low/med) Low  Date Received: 03/04/15

% Moisture: not dec. 39 decanted:(Y/N) NA  Date Extracted: 03/05/15

GPC Cleanup (Y/N): N  pH: NA  Date Analyzed: 3/5/2015

Conc. Extract Volume: 1000 (uL)  Dilution Factor 1

Injection Volume: 2 (uL)

Number TICs found: 12  CONCENTRATION UNITS: (ug/L or ug/KG) ug/Kg

| CAS NUMBER | COMPOUND NAME | RT | EST. CONC. | Q |
|---|---|---|---|---|
| 000123-42-2 | 2-Pentanone, 4-hydroxy-4-methyl- | 3.725 | 2200 | JNA |
| 017301-23-4 | Undecane, 2,6-dimethyl- | 7.828 | 450 | JN |
| | Unknown | 8.405 | 660 | JN |
| 000629-59-4 | Tetradecane | 10.124 | 540 | JN |
| 030824-81-8 | Naphthalene, decahydro-1,4a-dimethyl-7-(1-methylet | 10.530 | 600 | JN |
| | Unknown | 13.102 | 1000 | JN |
| 000057-10-3 | n-Hexadecanoic acid | 13.943 | 4000 | JN |
| 006566-19-4 | 10,18-Bisnorabieta-5,7,9(10),11,13-pentaene | 14.977 | 2400 | JN |
| | Unknown | 18.538 | 5900 | JN |
| | Unknown | 18.728 | 3200 | JN |
| 000629-92-5 | Nonadecane | 18.896 | 2600 | JN |
| 000629-94-7 | Heneicosane | 22.217 | 5100 | JN |

1F
SEMIVOLATILE ORGANICS ANALYSIS DATA SHEET
TENTATIVELY IDENTIFIED COMPOUNDS

CLIENT ID
TB-9 (2-4)

Lab Name: Phoenix Environmental Labs  Client: HESNY-TUCK

Lab Code: Phoenix  Case No.:  SAS No.:  SDG No.: GBH79483

Matrix:(soil/water) SOIL  Lab Sample ID: BH79486

Sample wt/vol: 15.07 (g/mL) g  Lab File ID: 0305_21.D

Level: (low/med) Low  Date Received: 03/04/15

% Moisture: not dec. 13 decanted:(Y/N) NA  Date Extracted: 03/05/15

GPC Cleanup (Y/N): N pH: NA  Date Analyzed: 3/5/2015

Conc. Extract Volume: 1000 (uL)  Dilution Factor 2

Injection Volume: 2 (uL)

Number TICs found: 1  CONCENTRATION UNITS: (ug/L or ug/KG) ug/Kg

| CAS NUMBER | COMPOUND NAME | RT | EST. CONC. | Q |
|---|---|---|---|---|
| 000123-42-2 | 2-Pentanone, 4-hydroxy-4-methyl- | 3.722 | 1700 | JNA |

FORM I SEMIVOA-TIC

1F
SEMIVOLATILE ORGANICS ANALYSIS DATA SHEET
TENTATIVELY IDENTIFIED COMPOUNDS

CLIENT ID
TB-9 (7-9)

Lab Name: Phoenix Environmental Labs  Client: HESNY-TUCK

Lab Code: Phoenix  Case No.:  SAS No.:  SDG No.: GBH79483

Matrix:(soil/water) SOIL  Lab Sample ID: BH79487

Sample wt/vol: 15.33 (g/mL) g  Lab File ID: 0305_22.D

Level: (low/med) Low  Date Received: 03/04/15

% Moisture: not dec. 14 decanted:(Y/N) NA  Date Extracted: 03/05/15

GPC Cleanup (Y/N): N pH: NA  Date Analyzed: 3/5/2015

Conc. Extract Volume: 1000 (uL)  Dilution Factor 2

Injection Volume: 2 (uL)

Number TICs found: 3  CONCENTRATION UNITS: (ug/L or ug/KG) ug/Kg

| CAS NUMBER | COMPOUND NAME | RT | EST. CONC. | Q |
|---|---|---|---|---|
| 000123-42-2 | 2-Pentanone, 4-hydroxy-4-methyl- | 3.720 | 1900 | JNA |
| | Unknown | 13.881 | 750 | JN |
| 000092-06-8 | m-Terphenyl | 15.310 | 640 | JN |

1F
SEMIVOLATILE ORGANICS ANALYSIS DATA SHEET
TENTATIVELY IDENTIFIED COMPOUNDS

CLIENT ID

TB-10 (4-6)

Lab Name: Phoenix Environmental Labs  Client: HESNY-TUCK

Lab Code: Phoenix  Case No.:  SAS No.:  SDG No.: GBH79483

Matrix:(soil/water) SOIL  Lab Sample ID: BH79488

Sample wt/vol: 15.16 (g/mL) g  Lab File ID: 0305_23.D

Level: (low/med) Low  Date Received: 03/04/15

% Moisture: not dec. 13 decanted:(Y/N) NA  Date Extracted: 03/05/15

GPC Cleanup (Y/N): N pH: NA  Date Analyzed: 3/5/2015

Conc. Extract Volume: 1000 (uL)  Dilution Factor 5

Injection Volume: 2 (uL)

Number TICs found: 4  CONCENTRATION UNITS: (ug/L or ug/KG) ug/Kg

| CAS NUMBER | COMPOUND NAME | RT | EST. CONC. | Q |
|---|---|---|---|---|
| 000123-42-2 | 2-Pentanone, 4-hydroxy-4-methyl- | 3.720 | 1700 | JNA |
| 000629-50-5 | Tridecane | 8.681 | 1700 | JN |
| 000629-59-4 | Tetradecane | 9.601 | 1600 | JN |
| 000203-64-5 | 4H-Cyclopenta[def]phenanthrene | 13.881 | 1600 | JN |

1F
SEMIVOLATILE ORGANICS ANALYSIS DATA SHEET
TENTATIVELY IDENTIFIED COMPOUNDS

CLIENT ID

TB-10 (32-34)

Lab Name: Phoenix Environmental Labs  Client: HESNY-TUCK

Lab Code: Phoenix  Case No.:  SAS No.:  SDG No.: GBH79483

Matrix:(soil/water) SOIL  Lab Sample ID: BH79489

Sample wt/vol: 15.22 (g/mL) g  Lab File ID: 0305_22.D

Level: (low/med) Low  Date Received: 03/04/15

% Moisture: not dec. 43 decanted:(Y/N) NA  Date Extracted: 03/05/15

GPC Cleanup (Y/N): N  pH: NA  Date Analyzed: 3/5/2015

Conc. Extract Volume: 1000 (uL)  Dilution Factor 2

Injection Volume: 2 (uL)

Number TICs found: 15  CONCENTRATION UNITS: (ug/L or ug/KG) ug/Kg

| CAS NUMBER | COMPOUND NAME | RT | EST. CONC. | Q |
|---|---|---|---|---|
| | Unknown | 3.780 | 3300 | JN |
| 000098-82-8 | Benzene, (1-methylethyl)- | 4.520 | 3800 | JN |
| 000103-65-1 | Benzene, propyl- | 4.870 | 10000 | JN |
| 000611-14-3 | Benzene, 1-ethyl-2-methyl- | 4.960 | 6800 | JN |
| 000526-73-8 | Benzene, 1,2,3-trimethyl- | 5.350 | 45000 | JN |
| 000108-67-8 | Benzene, 1,3,5-trimethyl- | 5.660 | 12000 | JN |
| 000496-11-7 | 1H-Indene, 2,3-dihydro- | 5.820 | 6100 | JN |
| 000135-01-3 | Benzene, 1,2-diethyl- | 5.930 | 4300 | JN |
| 001074-43-7 | Benzene, 1-methyl-3-propyl- | 5.970 | 6500 | JN |
| 000933-98-2 | Benzene, 1-ethyl-2,3-dimethyl- | 6.040 | 13000 | JN |
| 000527-53-7 | Benzene, 1,2,3,5-tetramethyl- | 6.240 | 6600 | JN |
| 000535-77-3 | Benzene, 1-methyl-3-(1-methylethyl | 6.280 | 5600 | JN |
| 000488-23-3 | Benzene, 1,2,3,4-tetramethyl- | 6.700 | 4100 | JN |
| | Benzene, 1-ethyl-2,3-dimethyl- Isomer | 6.730 | 4900 | JN |
| 002039-89-6 | Benzene, 2-ethenyl-1,4-dimethyl- | 7.060 | 5800 | JN |

PHOENIX

Environmental Laboratories, Inc.
587 East Middle Turnpike, P.O.Box 370, Manchester, CT 06045
Tel. (860) 645-1102 Fax (860) 645-0823

ACCREDITED IN ACCORDANCE WITH nelac NY # 11301

# QA/QC Report

March 16, 2015

## QA/QC Data

SDG I.D.: GBH79483

| Parameter | Blank | Sample Result | Dup Result | Dup RPD | LCS % | LCSD % | LCS RPD | MS % | MSD % | MS RPD | % Rec Limits | % RPD Limits | |
|---|---|---|---|---|---|---|---|---|---|---|---|---|---|
| QA/QC Batch 300815, QC Sample No: BH78545 (BH79483, BH79484, BH79485, BH79486, BH79487, BH79488, BH79489) | | | | | | | | | | | | | |
| Mercury - Soil | BRL | 0.34 | 0.32 | 6.10 | 99.2 | | | 75.8 | 55.2 | 31.5 | 70 - 130 | 30 | m,r |

**Comment:**

LCSD not reported.

Additional Mercury criteria: LCS acceptance range for waters is 80-120% and for soils is 70-130%.

QA/QC Batch 300775, QC Sample No: BH79341 (BH79483, BH79484, BH79485, BH79486, BH79487, BH79488, BH79489)

### ICP Metals - Soil

| | | | | | | | | | | | | | |
|---|---|---|---|---|---|---|---|---|---|---|---|---|---|
| Aluminum | BRL | 8930 | 7970 | 11.4 | 101 | 110 | 8.5 | NC | NC | NC | 75 - 125 | 30 | |
| Antimony | BRL | <1.8 | <3.4 | NC | 110 | 114 | 3.6 | 90.3 | 93.6 | 3.6 | 75 - 125 | 30 | |
| Arsenic | BRL | 2.9 | 2.85 | NC | 99.6 | 108 | 8.1 | 99.3 | 99.0 | 0.3 | 75 - 125 | 30 | |
| Barium | BRL | 55.2 | 49.6 | 10.7 | 111 | 127 | 13.4 | 115 | 107 | 7.2 | 75 - 125 | 30 | l |
| Beryllium | BRL | 0.39 | 0.36 | NC | 103 | 109 | 5.7 | 103 | 101 | 2.0 | 75 - 125 | 30 | |
| Cadmium | BRL | 0.30 | 0.27 | NC | 90.9 | 94.9 | 4.3 | 97.0 | 97.3 | 0.3 | 75 - 125 | 30 | |
| Calcium | BRL | 19800 | 19100 | 3.60 | 105 | 108 | 2.8 | NC | NC | NC | 75 - 125 | 30 | |
| Chromium | BRL | 19.8 | 15.2 | 26.3 | 107 | 114 | 6.3 | 104 | 103 | 1.0 | 75 - 125 | 30 | |
| Cobalt | BRL | 6.10 | 5.55 | 9.40 | 92.6 | 97.4 | 5.1 | 103 | 102 | 1.0 | 75 - 125 | 30 | |
| Copper | BRL | 23.4 | 22.0 | 6.20 | 98.5 | 104 | 5.4 | 123 | 117 | 5.0 | 75 - 125 | 30 | |
| Iron | BRL | 18400 | 15300 | 18.4 | 95.4 | 104 | 8.6 | NC | NC | NC | 75 - 125 | 30 | |
| Lead | BRL | 44.9 | 48.9 | 8.50 | 95.0 | 100 | 5.1 | 101 | 99.1 | 1.9 | 75 - 125 | 30 | |
| Magnesium | BRL | 3220 | 2870 | 11.5 | 107 | 114 | 6.3 | NC | NC | NC | 75 - 125 | 30 | |
| Manganese | BRL | 355 | 309 | 13.9 | 110 | 115 | 4.4 | 104 | >130 | NC | 75 - 125 | 30 | m |
| Nickel | BRL | 13.1 | 12.1 | 7.90 | 104 | 107 | 2.8 | 99.8 | 100 | 0.2 | 75 - 125 | 30 | |
| Potassium | BRL | 906 | 858 | 5.40 | 98.9 | 107 | 7.9 | >130 | >130 | NC | 75 - 125 | 30 | m |
| Selenium | BRL | <1.4 | <1.4 | NC | 89.1 | 96.5 | 8.0 | 83.5 | 85.2 | 2.0 | 75 - 125 | 30 | |
| Silver | BRL | <0.36 | <0.34 | NC | 105 | 111 | 5.6 | 108 | 108 | 0.0 | 75 - 125 | 30 | |
| Sodium | BRL | 98 | 102 | 4.00 | 107 | 115 | 7.2 | 130 | 114 | 13.1 | 75 - 125 | 30 | m |
| Thallium | BRL | <1.4 | <3.1 | NC | 102 | 111 | 8.5 | 103 | 103 | 0.0 | 75 - 125 | 30 | |
| Vanadium | BRL | 27.2 | 21.8 | 22.0 | 117 | 122 | 4.2 | 108 | 105 | 2.8 | 75 - 125 | 30 | |
| Zinc | BRL | 153 | 172 | 11.7 | 92.7 | 97.9 | 5.5 | 105 | 104 | 1.0 | 75 - 125 | 30 | |

l = This parameter is outside laboratory lcs/lcsd specified recovery limits.
m = This parameter is outside laboratory ms/msd specified recovery limits.
r = This parameter is outside laboratory rpd specified recovery limits.

PHOENIX

Environmental Laboratories, Inc.
587 East Middle Turnpike, P.O.Box 370, Manchester, CT 06045
Tel. (860) 645-1102 Fax (860) 645-0823

ACCREDITED IN ACCORDANCE WITH nelac
NY # 11301

# QA/QC Report

March 16, 2015

## QA/QC Data

SDG I.D.: GBH79483

| Parameter | Blank | Sample Result | Dup Result | Dup RPD | LCS % | LCSD % | LCS RPD | MS % | MSD % | MS RPD | % Rec Limits | % RPD Limits |
|---|---|---|---|---|---|---|---|---|---|---|---|---|
| QA/QC Batch 300799, QC Sample No: BH78389 (BH79483, BH79484, BH79485, BH79486, BH79487, BH79488, BH79489) | | | | | | | | | | | | |
| Total Cyanide (SW9010C Distillation) | BRL | 2.93 | 3.36 | 13.7 | 103 | | | 101 | | | 85 - 115 | 30 |

PHOENIX

Environmental Laboratories, Inc.
587 East Middle Turnpike, P.O.Box 370, Manchester, CT 06045
Tel. (860) 645-1102 Fax (860) 645-0823

ACCREDITED IN ACCORDANCE WITH nelac NY # 11301

# QA/QC Report

March 16, 2015

## QA/QC Data

SDG I.D.: GBH79483

| Parameter | Blank | LCS % | LCSD % | LCS RPD | MS % | MSD % | MS RPD | % Rec Limits | % RPD Limits | |
|---|---|---|---|---|---|---|---|---|---|---|
| QA/QC Batch 300653, QC Sample No: BH78913 (BH79483, BH79484, BH79485, BH79486, BH79487, BH79488, BH79489) | | | | | | | | | | |
| **Polychlorinated Biphenyls - Soil** | | | | | | | | | | |
| PCB-1016 | ND | 96 | 100 | 4.1 | 85 | 98 | 14.2 | 40 - 140 | 30 | |
| PCB-1221 | ND | | | | | | | 40 - 140 | 30 | |
| PCB-1232 | ND | | | | | | | 40 - 140 | 30 | |
| PCB-1242 | ND | | | | | | | 40 - 140 | 30 | |
| PCB-1248 | ND | | | | | | | 40 - 140 | 30 | |
| PCB-1254 | ND | | | | | | | 40 - 140 | 30 | |
| PCB-1260 | ND | 96 | 103 | 7.0 | 84 | 96 | 13.3 | 40 - 140 | 30 | |
| PCB-1262 | ND | | | | | | | 40 - 140 | 30 | |
| PCB-1268 | ND | | | | | | | 40 - 140 | 30 | |
| % DCBP (Surrogate Rec) | 92 | 117 | 125 | 6.6 | 87 | 100 | 13.9 | 30 - 150 | 30 | |
| % TCMX (Surrogate Rec) | 59 | 99 | 103 | 4.0 | 86 | 94 | 8.9 | 30 - 150 | 30 | |
| QA/QC Batch 300652, QC Sample No: BH78913 (BH79483, BH79484, BH79485, BH79486, BH79487, BH79488, BH79489) | | | | | | | | | | |
| **Semivolatiles - Soil** | | | | | | | | | | |
| 1,1-Biphenyl | ND | 78 | 78 | 0.0 | 60 | 60 | 0.0 | 30 - 130 | 30 | |
| 1,2,4,5-Tetrachlorobenzene | ND | 77 | 77 | 0.0 | 58 | 59 | 1.7 | 30 - 130 | 30 | |
| 2,3,4,6-tetrachlorophenol | ND | 100 | 97 | 3.0 | 73 | 77 | 5.3 | 30 - 130 | 30 | |
| 2,4,5-Trichlorophenol | ND | 85 | 87 | 2.3 | 65 | 68 | 4.5 | 30 - 130 | 30 | |
| 2,4,6-Trichlorophenol | ND | 86 | 87 | 1.2 | 64 | 66 | 3.1 | 30 - 130 | 30 | |
| 2,4-Dichlorophenol | ND | 81 | 83 | 2.4 | 61 | 61 | 0.0 | 30 - 130 | 30 | |
| 2,4-Dimethylphenol | ND | 78 | 78 | 0.0 | 63 | 64 | 1.6 | 30 - 130 | 30 | |
| 2,4-Dinitrophenol | ND | 33 | 31 | 6.3 | 90 | 70 | 25.0 | 30 - 130 | 30 | |
| 2,4-Dinitrotoluene | ND | 99 | 97 | 2.0 | 69 | 70 | 1.4 | 30 - 130 | 30 | |
| 2,6-Dinitrotoluene | ND | 91 | 90 | 1.1 | 64 | 65 | 1.6 | 30 - 130 | 30 | |
| 2-Chloronaphthalene | ND | 80 | 81 | 1.2 | 63 | 63 | 0.0 | 30 - 130 | 30 | |
| 2-Chlorophenol | ND | 78 | 78 | 0.0 | 58 | 59 | 1.7 | 30 - 130 | 30 | |
| 2-Methylnaphthalene | ND | 76 | 77 | 1.3 | 58 | 59 | 1.7 | 30 - 130 | 30 | |
| 2-Methylphenol (o-cresol) | ND | 75 | 75 | 0.0 | 60 | 58 | 3.4 | 30 - 130 | 30 | |
| 2-Nitroaniline | ND | 144 | 146 | 1.4 | 104 | 102 | 1.9 | 30 - 130 | 30 | l |
| 2-Nitrophenol | ND | 86 | 85 | 1.2 | 65 | 66 | 1.5 | 30 - 130 | 30 | |
| 3&4-Methylphenol (m&p-cresol) | ND | 77 | 77 | 0.0 | 57 | 57 | 0.0 | 30 - 130 | 30 | |
| 3,3'-Dichlorobenzidine | ND | 63 | 62 | 1.6 | 42 | 44 | 4.7 | 30 - 130 | 30 | |
| 3-Nitroaniline | ND | 77 | 74 | 4.0 | 56 | 55 | 1.8 | 30 - 130 | 30 | |
| 4,6-Dinitro-2-methylphenol | ND | 61 | 59 | 3.3 | 114 | 83 | 31.5 | 30 - 130 | 30 | r |
| 4-Bromophenyl phenyl ether | ND | 75 | 74 | 1.3 | 54 | 55 | 1.8 | 30 - 130 | 30 | |
| 4-Chloro-3-methylphenol | ND | 83 | 83 | 0.0 | 62 | 65 | 4.7 | 30 - 130 | 30 | |
| 4-Chloroaniline | ND | 45 | 46 | 2.2 | 27 | 29 | 7.1 | 30 - 130 | 30 | m |
| 4-Chlorophenyl phenyl ether | ND | 85 | 84 | 1.2 | 62 | 62 | 0.0 | 30 - 130 | 30 | |
| 4-Nitroaniline | ND | 93 | 92 | 1.1 | 70 | 70 | 0.0 | 30 - 130 | 30 | |
| 4-Nitrophenol | ND | 136 | 132 | 3.0 | 96 | 97 | 1.0 | 30 - 130 | 30 | l |
| Acenaphthene | ND | 85 | 85 | 0.0 | 64 | 64 | 0.0 | 30 - 130 | 30 | |
| Acenaphthylene | ND | 81 | 83 | 2.4 | 62 | 63 | 1.6 | 30 - 130 | 30 | |

# QA/QC Data

SDG I.D.: GBH79483

| Parameter | Blank | LCS % | LCSD % | LCS RPD | MS % | MSD % | MS RPD | % Rec Limits | % RPD Limits | |
|---|---|---|---|---|---|---|---|---|---|---|
| Acetophenone | ND | 81 | 82 | 1.2 | 61 | 62 | 1.6 | 30 - 130 | 30 | |
| Anthracene | ND | 87 | 89 | 2.3 | 68 | 68 | 0.0 | 30 - 130 | 30 | |
| Atrazine | ND | 95 | 93 | 2.1 | 73 | 70 | 4.2 | 30 - 130 | 30 | |
| Benz(a)anthracene | ND | 89 | 89 | 0.0 | 64 | 64 | 0.0 | 30 - 130 | 30 | |
| Benzaldehyde | ND | 133 | 134 | 0.7 | 148 | 148 | 0.0 | 30 - 130 | 30 | l,m |
| Benzo(a)pyrene | ND | 88 | 87 | 1.1 | 62 | 61 | 1.6 | 30 - 130 | 30 | |
| Benzo(b)fluoranthene | ND | 87 | 87 | 0.0 | 59 | 58 | 1.7 | 30 - 130 | 30 | |
| Benzo(ghi)perylene | ND | 80 | 81 | 1.2 | 61 | 65 | 6.3 | 30 - 130 | 30 | |
| Benzo(k)fluoranthene | ND | 88 | 88 | 0.0 | 66 | 65 | 1.5 | 30 - 130 | 30 | |
| Benzyl butyl phthalate | ND | 86 | 84 | 2.4 | 67 | 69 | 2.9 | 30 - 130 | 30 | |
| Bis(2-chloroethoxy)methane | ND | 81 | 82 | 1.2 | 60 | 61 | 1.7 | 30 - 130 | 30 | |
| Bis(2-chloroethyl)ether | ND | 63 | 62 | 1.6 | 51 | 53 | 3.8 | 30 - 130 | 30 | |
| Bis(2-chloroisopropyl)ether | ND | 71 | 71 | 0.0 | 52 | 52 | 0.0 | 30 - 130 | 30 | |
| Bis(2-ethylhexyl)phthalate | ND | 84 | 84 | 0.0 | 64 | 64 | 0.0 | 30 - 130 | 30 | |
| Caprolactam | ND | 86 | 84 | 2.4 | 57 | 58 | 1.7 | 30 - 130 | 30 | |
| Carbazole | ND | 110 | 112 | 1.8 | 85 | 82 | 3.6 | 30 - 130 | 30 | |
| Chrysene | ND | 93 | 92 | 1.1 | 67 | 65 | 3.0 | 30 - 130 | 30 | |
| Dibenz(a,h)anthracene | ND | 79 | 79 | 0.0 | 62 | 64 | 3.2 | 30 - 130 | 30 | |
| Dibenzofuran | ND | 86 | 86 | 0.0 | 64 | 64 | 0.0 | 30 - 130 | 30 | |
| Diethyl phthalate | ND | 95 | 93 | 2.1 | 67 | 67 | 0.0 | 30 - 130 | 30 | |
| Dimethylphthalate | ND | 89 | 87 | 2.3 | 64 | 64 | 0.0 | 30 - 130 | 30 | |
| Di-n-butylphthalate | ND | 91 | 92 | 1.1 | 66 | 63 | 4.7 | 30 - 130 | 30 | |
| Di-n-octylphthalate | ND | 86 | 86 | 0.0 | 57 | 58 | 1.7 | 30 - 130 | 30 | |
| Fluoranthene | ND | 96 | 96 | 0.0 | 71 | 67 | 5.8 | 30 - 130 | 30 | |
| Fluorene | ND | 90 | 89 | 1.1 | 67 | 68 | 1.5 | 30 - 130 | 30 | |
| Hexachlorobenzene | ND | 77 | 74 | 4.0 | 56 | 56 | 0.0 | 30 - 130 | 30 | |
| Hexachlorobutadiene | ND | 77 | 76 | 1.3 | 57 | 57 | 0.0 | 30 - 130 | 30 | |
| Hexachlorocyclopentadiene | ND | 72 | 74 | 2.7 | 33 | 21 | 44.4 | 30 - 130 | 30 | m,r |
| Hexachloroethane | ND | 67 | 67 | 0.0 | 47 | 46 | 2.2 | 30 - 130 | 30 | |
| Indeno(1,2,3-cd)pyrene | ND | 66 | 67 | 1.5 | 51 | 53 | 3.8 | 30 - 130 | 30 | |
| Isophorone | ND | 74 | 74 | 0.0 | 55 | 56 | 1.8 | 30 - 130 | 30 | |
| Naphthalene | ND | 78 | 78 | 0.0 | 59 | 60 | 1.7 | 30 - 130 | 30 | |
| Nitrobenzene | ND | 76 | 76 | 0.0 | 56 | 57 | 1.8 | 30 - 130 | 30 | |
| N-Nitrosodimethylamine | ND | 68 | 68 | 0.0 | 44 | 43 | 2.3 | 30 - 130 | 30 | |
| N-Nitrosodi-n-propylamine | ND | 76 | 78 | 2.6 | 58 | 57 | 1.7 | 30 - 130 | 30 | |
| N-Nitrosodiphenylamine | ND | 98 | 94 | 4.2 | 69 | 71 | 2.9 | 30 - 130 | 30 | |
| Pentachlorophenol | ND | 86 | 88 | 2.3 | 77 | 72 | 6.7 | 30 - 130 | 30 | |
| Phenanthrene | ND | 87 | 85 | 2.3 | 63 | 62 | 1.6 | 30 - 130 | 30 | |
| Phenol | ND | 77 | 78 | 1.3 | 55 | 56 | 1.8 | 30 - 130 | 30 | |
| Pyrene | ND | 97 | 96 | 1.0 | 70 | 67 | 4.4 | 30 - 130 | 30 | |
| % 2,4,6-Tribromophenol | 57 | 79 | 76 | 3.9 | 60 | 61 | 1.7 | 30 - 130 | 30 | |
| % 2-Fluorobiphenyl | 49 | 76 | 77 | 1.3 | 56 | 56 | 0.0 | 30 - 130 | 30 | |
| % 2-Fluorophenol | 44 | 73 | 72 | 1.4 | 50 | 50 | 0.0 | 30 - 130 | 30 | |
| % Nitrobenzene-d5 | 46 | 71 | 70 | 1.4 | 50 | 51 | 2.0 | 30 - 130 | 30 | |
| % Phenol-d5 | 49 | 76 | 76 | 0.0 | 51 | 52 | 1.9 | 30 - 130 | 30 | |
| % Terphenyl-d14 | 58 | 96 | 96 | 0.0 | 69 | 66 | 4.4 | 30 - 130 | 30 | |

**Comment:**

Additional 8270 criteria: 20% of compounds can be outside of acceptance criteria as long as recovery is at least 10%. (Acid surrogates acceptance range for aqueous samples: 15-110%, for soils 30-130%)

QA/QC Batch 300959, QC Sample No: BH79121 (BH79483)

## Volatiles (TCL) - Soil

| | | | | | | | | | | |
|---|---|---|---|---|---|---|---|---|---|---|
| 1,1,1-Trichloroethane | ND | 112 | 115 | 2.6 | 103 | 105 | 1.9 | 70 - 130 | 30 | |

# QA/QC Data

SDG I.D.: GBH79483

| Parameter | Blank | LCS % | LCSD % | LCS RPD | MS % | MSD % | MS RPD | % Rec Limits | % RPD Limits | |
|---|---|---|---|---|---|---|---|---|---|---|
| 1,1,2,2-Tetrachloroethane | ND | 136 | 138 | 1.5 | 115 | 122 | 5.9 | 70 - 130 | 30 | l |
| 1,1,2-Trichloroethane | ND | 108 | 110 | 1.8 | 99 | 101 | 2.0 | 70 - 130 | 30 | |
| 1,1-Dichloroethane | ND | 115 | 118 | 2.6 | 106 | 111 | 4.6 | 70 - 130 | 30 | |
| 1,1-Dichloroethene | ND | 112 | 118 | 5.2 | 85 | 87 | 2.3 | 70 - 130 | 30 | |
| 1,2,3-Trichlorobenzene | ND | 115 | 115 | 0.0 | 104 | 110 | 5.6 | 70 - 130 | 30 | |
| 1,2,4-Trichlorobenzene | ND | 113 | 110 | 2.7 | 105 | 109 | 3.7 | 70 - 130 | 30 | |
| 1,2-Dibromo-3-chloropropane | ND | 120 | 119 | 0.8 | 100 | 108 | 7.7 | 70 - 130 | 30 | |
| 1,2-Dibromoethane | ND | 112 | 113 | 0.9 | 96 | 101 | 5.1 | 70 - 130 | 30 | |
| 1,2-Dichlorobenzene | ND | 115 | 114 | 0.9 | 106 | 110 | 3.7 | 70 - 130 | 30 | |
| 1,2-Dichloroethane | ND | 105 | 107 | 1.9 | 95 | 96 | 1.0 | 70 - 130 | 30 | |
| 1,2-Dichloropropane | ND | 115 | 117 | 1.7 | 104 | 109 | 4.7 | 70 - 130 | 30 | |
| 1,3-Dichlorobenzene | ND | 116 | 116 | 0.0 | 108 | 113 | 4.5 | 70 - 130 | 30 | |
| 1,4-Dichlorobenzene | ND | 121 | 121 | 0.0 | 116 | 119 | 2.6 | 70 - 130 | 30 | |
| 1,4-dioxane | ND | 118 | 117 | 0.9 | 111 | 112 | 0.9 | 70 - 130 | 30 | |
| 2-Hexanone | ND | 110 | 110 | 0.0 | 96 | 106 | 9.9 | 70 - 130 | 30 | |
| 4-Methyl-2-pentanone | ND | 108 | 110 | 1.8 | 96 | 104 | 8.0 | 70 - 130 | 30 | |
| Acetone | ND | 95 | 103 | 8.1 | 63 | 67 | 6.2 | 70 - 130 | 30 | m |
| Benzene | ND | 115 | 117 | 1.7 | 105 | 108 | 2.8 | 70 - 130 | 30 | |
| Bromochloromethane | ND | 116 | 114 | 1.7 | 100 | 103 | 3.0 | 70 - 130 | 30 | |
| Bromodichloromethane | ND | 115 | 117 | 1.7 | 96 | 99 | 3.1 | 70 - 130 | 30 | |
| Bromoform | ND | 109 | 112 | 2.7 | 88 | 91 | 3.4 | 70 - 130 | 30 | |
| Bromomethane | ND | 102 | 104 | 1.9 | 66 | 73 | 10.1 | 70 - 130 | 30 | m |
| Carbon Disulfide | ND | 133 | 136 | 2.2 | 86 | 90 | 4.5 | 70 - 130 | 30 | l |
| Carbon tetrachloride | ND | 108 | 109 | 0.9 | 94 | 101 | 7.2 | 70 - 130 | 30 | |
| Chlorobenzene | ND | 116 | 118 | 1.7 | 107 | 111 | 3.7 | 70 - 130 | 30 | |
| Chloroethane | ND | 99 | 103 | 4.0 | 42 | 43 | 2.4 | 70 - 130 | 30 | m |
| Chloroform | ND | 113 | 114 | 0.9 | 92 | 94 | 2.2 | 70 - 130 | 30 | |
| Chloromethane | ND | 111 | 118 | 6.1 | 111 | 115 | 3.5 | 70 - 130 | 30 | |
| cis-1,2-Dichloroethene | ND | 117 | 119 | 1.7 | 106 | 110 | 3.7 | 70 - 130 | 30 | |
| cis-1,3-Dichloropropene | ND | 120 | 121 | 0.8 | 102 | 106 | 3.8 | 70 - 130 | 30 | |
| Cyclohexane | ND | 109 | 111 | 1.8 | 113 | 116 | 2.6 | 70 - 130 | 30 | |
| Dibromochloromethane | ND | 115 | 116 | 0.9 | 91 | 98 | 7.4 | 70 - 130 | 30 | |
| Dichlorodifluoromethane | ND | 112 | 113 | 0.9 | 110 | 115 | 4.4 | 70 - 130 | 30 | |
| Ethylbenzene | ND | 117 | 120 | 2.5 | 108 | 114 | 5.4 | 70 - 130 | 30 | |
| Isopropylbenzene | ND | 119 | 120 | 0.8 | 113 | 119 | 5.2 | 70 - 130 | 30 | |
| m&p-Xylene | ND | 114 | 118 | 3.4 | 108 | 112 | 3.6 | 70 - 130 | 30 | |
| Methyl ethyl ketone | ND | 110 | 104 | 5.6 | 90 | 93 | 3.3 | 70 - 130 | 30 | |
| Methyl t-butyl ether (MTBE) | ND | 110 | 110 | 0.0 | 91 | 95 | 4.3 | 70 - 130 | 30 | |
| Methylacetate | ND | 115 | 119 | 3.4 | 113 | 115 | 1.8 | 70 - 130 | 30 | |
| Methylcyclohexane | ND | 111 | 113 | 1.8 | 107 | 110 | 2.8 | 70 - 130 | 30 | |
| Methylene chloride | ND | 105 | 108 | 2.8 | 92 | 97 | 5.3 | 70 - 130 | 30 | |
| o-Xylene | ND | 117 | 119 | 1.7 | 109 | 114 | 4.5 | 70 - 130 | 30 | |
| Styrene | ND | 117 | 118 | 0.9 | 109 | 112 | 2.7 | 70 - 130 | 30 | |
| Tetrachloroethene | ND | 114 | 115 | 0.9 | 104 | 110 | 5.6 | 70 - 130 | 30 | |
| Toluene | ND | 112 | 115 | 2.6 | 104 | 108 | 3.8 | 70 - 130 | 30 | |
| trans-1,2-Dichloroethene | ND | 122 | 123 | 0.8 | 107 | 111 | 3.7 | 70 - 130 | 30 | |
| trans-1,3-Dichloropropene | ND | 120 | 120 | 0.0 | 99 | 101 | 2.0 | 70 - 130 | 30 | |
| Trichloroethene | ND | 108 | 111 | 2.7 | 99 | 104 | 4.9 | 70 - 130 | 30 | |
| Trichlorofluoromethane | ND | 106 | 110 | 3.7 | 29 | 30 | 3.4 | 70 - 130 | 30 | m |
| Trichlorotrifluoroethane | ND | 114 | 115 | 0.9 | 89 | 92 | 3.3 | 70 - 130 | 30 | |
| Vinyl chloride | ND | 112 | 115 | 2.6 | 117 | 121 | 3.4 | 70 - 130 | 30 | |
| % 1,2-dichlorobenzene-d4 | 100 | 100 | 101 | 1.0 | 99 | 100 | 1.0 | 70 - 130 | 30 | |
| % Bromofluorobenzene | 95 | 100 | 100 | 0.0 | 98 | 98 | 0.0 | 70 - 130 | 30 | |

# QA/QC Data

SDG I.D.: GBH79483

| Parameter | Blank | LCS % | LCSD % | LCS RPD | MS % | MSD % | MS RPD | % Rec Limits | % RPD Limits | |
|---|---|---|---|---|---|---|---|---|---|---|
| % Dibromofluoromethane | 99 | 99 | 101 | 2.0 | 96 | 97 | 1.0 | 70 - 130 | 30 | |
| % Toluene-d8 | 96 | 101 | 101 | 0.0 | 100 | 100 | 0.0 | 70 - 130 | 30 | |

**Comment:**

Additional 8260 criteria: 10% of LCS/LCSD compounds can be outside of acceptance criteria as long as recovery is 40-160%.

QA/QC Batch 300886, QC Sample No: BH79488 (BH79484 (1X, 25X) , BH79485 (1X, 28X) , BH79486, BH79487 (1X, 29X) , BH79488)

## Volatiles (TCL) - Soil

| | | | | | | | | | | |
|---|---|---|---|---|---|---|---|---|---|---|
| 1,1,1-Trichloroethane | ND | 113 | 110 | 2.7 | 96 | 97 | 1.0 | 70 - 130 | 30 | |
| 1,1,2,2-Tetrachloroethane | ND | 125 | 120 | 4.1 | 99 | 99 | 0.0 | 70 - 130 | 30 | |
| 1,1,2-Trichloroethane | ND | 113 | 111 | 1.8 | 96 | 96 | 0.0 | 70 - 130 | 30 | |
| 1,1-Dichloroethane | ND | 128 | 123 | 4.0 | 111 | 114 | 2.7 | 70 - 130 | 30 | |
| 1,1-Dichloroethene | ND | 116 | 109 | 6.2 | 83 | 83 | 0.0 | 70 - 130 | 30 | |
| 1,2,3-Trichlorobenzene | ND | 90 | 82 | 9.3 | 78 | 78 | 0.0 | 70 - 130 | 30 | |
| 1,2,4-Trichlorobenzene | ND | 86 | 80 | 7.2 | 79 | 76 | 3.9 | 70 - 130 | 30 | |
| 1,2-Dibromo-3-chloropropane | ND | 113 | 111 | 1.8 | 86 | 85 | 1.2 | 70 - 130 | 30 | |
| 1,2-Dibromoethane | ND | 119 | 116 | 2.6 | 98 | 99 | 1.0 | 70 - 130 | 30 | |
| 1,2-Dichlorobenzene | ND | 95 | 88 | 7.7 | 83 | 82 | 1.2 | 70 - 130 | 30 | |
| 1,2-Dichloroethane | ND | 110 | 107 | 2.8 | 94 | 94 | 0.0 | 70 - 130 | 30 | |
| 1,2-Dichloropropane | ND | 123 | 118 | 4.1 | 106 | 107 | 0.9 | 70 - 130 | 30 | |
| 1,3-Dichlorobenzene | ND | 94 | 87 | 7.7 | 84 | 80 | 4.9 | 70 - 130 | 30 | |
| 1,4-Dichlorobenzene | ND | 90 | 83 | 8.1 | 82 | 79 | 3.7 | 70 - 130 | 30 | |
| 1,4-dioxane | ND | 126 | 105 | 18.2 | 80 | 107 | 28.9 | 70 - 130 | 30 | |
| 2-Hexanone | ND | 99 | 98 | 1.0 | 82 | 84 | 2.4 | 70 - 130 | 30 | |
| 4-Methyl-2-pentanone | ND | 118 | 118 | 0.0 | 92 | 93 | 1.1 | 70 - 130 | 30 | |
| Acetone | ND | 91 | 96 | 5.3 | 50 | 68 | 30.5 | 70 - 130 | 30 | m |
| Benzene | ND | 120 | 115 | 4.3 | 104 | 103 | 1.0 | 70 - 130 | 30 | |
| Bromochloromethane | ND | 114 | 108 | 5.4 | 93 | 94 | 1.1 | 70 - 130 | 30 | |
| Bromodichloromethane | ND | 117 | 111 | 5.3 | 93 | 94 | 1.1 | 70 - 130 | 30 | |
| Bromoform | ND | 87 | 87 | 0.0 | 61 | 64 | 4.8 | 70 - 130 | 30 | m |
| Bromomethane | ND | 93 | 85 | 9.0 | 54 | 58 | 7.1 | 70 - 130 | 30 | m |
| Carbon Disulfide | ND | 132 | 127 | 3.9 | 85 | 86 | 1.2 | 70 - 130 | 30 | l |
| Carbon tetrachloride | ND | 112 | 107 | 4.6 | 90 | 89 | 1.1 | 70 - 130 | 30 | |
| Chlorobenzene | ND | 97 | 94 | 3.1 | 87 | 87 | 0.0 | 70 - 130 | 30 | |
| Chloroethane | ND | 119 | 111 | 7.0 | 25 | 24 | 4.1 | 70 - 130 | 30 | m |
| Chloroform | ND | 114 | 110 | 3.6 | 99 | 99 | 0.0 | 70 - 130 | 30 | |
| Chloromethane | ND | 117 | 113 | 3.5 | 106 | 107 | 0.9 | 70 - 130 | 30 | |
| cis-1,2-Dichloroethene | ND | 123 | 127 | 3.2 | 105 | 105 | 0.0 | 70 - 130 | 30 | |
| cis-1,3-Dichloropropene | ND | 127 | 123 | 3.2 | 104 | 104 | 0.0 | 70 - 130 | 30 | |
| Cyclohexane | ND | 113 | 109 | 3.6 | 112 | 113 | 0.9 | 70 - 130 | 30 | |
| Dibromochloromethane | ND | 101 | 99 | 2.0 | 76 | 79 | 3.9 | 70 - 130 | 30 | |
| Dichlorodifluoromethane | ND | 104 | 101 | 2.9 | 89 | 95 | 6.5 | 70 - 130 | 30 | |
| Ethylbenzene | ND | 102 | 98 | 4.0 | 90 | 89 | 1.1 | 70 - 130 | 30 | |
| Isopropylbenzene | ND | 109 | 101 | 7.6 | 93 | 93 | 0.0 | 70 - 130 | 30 | |
| m&p-Xylene | ND | 98 | 92 | 6.3 | 87 | 87 | 0.0 | 70 - 130 | 30 | |
| Methyl ethyl ketone | ND | 106 | 113 | 6.4 | 82 | 80 | 2.5 | 70 - 130 | 30 | |
| Methyl t-butyl ether (MTBE) | ND | 111 | 103 | 7.5 | 82 | 84 | 2.4 | 70 - 130 | 30 | |
| Methylacetate | ND | 130 | 130 | 0.0 | 166 | 162 | 2.4 | 70 - 130 | 30 | m |
| Methylcyclohexane | ND | 108 | 106 | 1.9 | 103 | 103 | 0.0 | 70 - 130 | 30 | |
| Methylene chloride | ND | 109 | 105 | 3.7 | 88 | 90 | 2.2 | 70 - 130 | 30 | |
| o-Xylene | ND | 103 | 100 | 3.0 | 91 | 91 | 0.0 | 70 - 130 | 30 | |
| Styrene | ND | 101 | 96 | 5.1 | 90 | 90 | 0.0 | 70 - 130 | 30 | |
| Tetrachloroethene | ND | 87 | 83 | 4.7 | 79 | 77 | 2.6 | 70 - 130 | 30 | |

| Parameter | Blank | LCS % | LCSD % | LCS RPD | MS % | MSD % | MS RPD | % Rec Limits | % RPD Limits | |
|---|---|---|---|---|---|---|---|---|---|---|
| Toluene | ND | 115 | 110 | 4.4 | 99 | 100 | 1.0 | 70 - 130 | 30 | |
| trans-1,2-Dichloroethene | ND | 114 | 109 | 4.5 | 94 | 96 | 2.1 | 70 - 130 | 30 | |
| trans-1,3-Dichloropropene | ND | 122 | 120 | 1.7 | 97 | 96 | 1.0 | 70 - 130 | 30 | |
| Trichloroethene | ND | 99 | 98 | 1.0 | 87 | 88 | 1.1 | 70 - 130 | 30 | |
| Trichlorofluoromethane | ND | 104 | 101 | 2.9 | 19 | 18 | 5.4 | 70 - 130 | 30 | m |
| Trichlorotrifluoroethane | ND | 113 | 110 | 2.7 | 86 | 88 | 2.3 | 70 - 130 | 30 | |
| Vinyl chloride | ND | 116 | 112 | 3.5 | 121 | 123 | 1.6 | 70 - 130 | 30 | |
| % 1,2-dichlorobenzene-d4 | 94 | 103 | 99 | 4.0 | 101 | 102 | 1.0 | 70 - 130 | 30 | |
| % Bromofluorobenzene | 102 | 111 | 107 | 3.7 | 111 | 110 | 0.9 | 70 - 130 | 30 | |
| % Dibromofluoromethane | 93 | 94 | 92 | 2.2 | 92 | 94 | 2.2 | 70 - 130 | 30 | |
| % Toluene-d8 | 96 | 109 | 109 | 0.0 | 109 | 108 | 0.9 | 70 - 130 | 30 | |

**Comment:**

Additional 8260 criteria: 10% of LCS/LCSD compounds can be outside of acceptance criteria as long as recovery is 40-160%.

QA/QC Batch 301096, QC Sample No: BH80067 (BH79489 (50X) )

## Volatiles (TCL) - Soil

| | | | | | | | | | | |
|---|---|---|---|---|---|---|---|---|---|---|
| 1,1,1-Trichloroethane | ND | 106 | 114 | 7.3 | 92 | | | 70 - 130 | 30 | |
| 1,1,2,2-Tetrachloroethane | ND | 106 | 117 | 9.9 | 89 | | | 70 - 130 | 30 | |
| 1,1,2-Trichloroethane | ND | 108 | 117 | 8.0 | 97 | | | 70 - 130 | 30 | |
| 1,1-Dichloroethane | ND | 102 | 109 | 6.6 | 88 | | | 70 - 130 | 30 | |
| 1,1-Dichloroethene | ND | 108 | 118 | 8.8 | 55 | | | 70 - 130 | 30 | m |
| 1,2,3-Trichlorobenzene | ND | 107 | 114 | 6.3 | 88 | | | 70 - 130 | 30 | |
| 1,2,4-Trichlorobenzene | ND | 108 | 115 | 6.3 | 91 | | | 70 - 130 | 30 | |
| 1,2-Dibromo-3-chloropropane | ND | 97 | 111 | 13.5 | 83 | | | 70 - 130 | 30 | |
| 1,2-Dibromoethane | ND | 108 | 116 | 7.1 | 97 | | | 70 - 130 | 30 | |
| 1,2-Dichlorobenzene | ND | 107 | 115 | 7.2 | 96 | | | 70 - 130 | 30 | |
| 1,2-Dichloroethane | ND | 102 | 111 | 8.5 | 89 | | | 70 - 130 | 30 | |
| 1,2-Dichloropropane | ND | 107 | 115 | 7.2 | 94 | | | 70 - 130 | 30 | |
| 1,3-Dichlorobenzene | ND | 107 | 114 | 6.3 | 97 | | | 70 - 130 | 30 | |
| 1,4-Dichlorobenzene | ND | 108 | 115 | 6.3 | 97 | | | 70 - 130 | 30 | |
| 1,4-dioxane | ND | 106 | 119 | 11.6 | 89 | | | 70 - 130 | 30 | |
| 2-Hexanone | ND | 93 | 105 | 12.1 | 81 | | | 70 - 130 | 30 | |
| 4-Methyl-2-pentanone | ND | 100 | 113 | 12.2 | 89 | | | 70 - 130 | 30 | |
| Acetone | ND | 94 | 104 | 10.1 | 63 | | | 70 - 130 | 30 | m |
| Benzene | ND | 107 | 114 | 6.3 | 95 | | | 70 - 130 | 30 | |
| Bromochloromethane | ND | 106 | 116 | 9.0 | 93 | | | 70 - 130 | 30 | |
| Bromodichloromethane | ND | 108 | 117 | 8.0 | 90 | | | 70 - 130 | 30 | |
| Bromoform | ND | 102 | 112 | 9.3 | 85 | | | 70 - 130 | 30 | |
| Bromomethane | ND | 96 | 107 | 10.8 | 60 | | | 70 - 130 | 30 | m |
| Carbon Disulfide | ND | 105 | 113 | 7.3 | 51 | | | 70 - 130 | 30 | m |
| Carbon tetrachloride | ND | 107 | 112 | 4.6 | 96 | | | 70 - 130 | 30 | |
| Chlorobenzene | ND | 108 | 114 | 5.4 | >200 | | | 70 - 130 | 30 | m |
| Chloroethane | ND | 85 | 89 | 4.6 | 23 | | | 70 - 130 | 30 | m |
| Chloroform | ND | 101 | 109 | 7.6 | 90 | | | 70 - 130 | 30 | |
| Chloromethane | ND | 84 | 93 | 10.2 | 89 | | | 70 - 130 | 30 | |
| cis-1,2-Dichloroethene | ND | 102 | 110 | 7.5 | 90 | | | 70 - 130 | 30 | |
| cis-1,3-Dichloropropene | ND | 110 | 117 | 6.2 | 92 | | | 70 - 130 | 30 | |
| Cyclohexane | ND | 97 | 105 | 7.9 | 93 | | | 70 - 130 | 30 | |
| Dibromochloromethane | ND | 108 | 117 | 8.0 | 88 | | | 70 - 130 | 30 | |
| Dichlorodifluoromethane | ND | 89 | 94 | 5.5 | 83 | | | 70 - 130 | 30 | |
| Ethylbenzene | ND | 108 | 115 | 6.3 | 92 | | | 70 - 130 | 30 | |
| Isopropylbenzene | ND | 105 | 110 | 4.7 | 96 | | | 70 - 130 | 30 | |
| m&p-Xylene | ND | 109 | 115 | 5.4 | 97 | | | 70 - 130 | 30 | |

# QA/QC Data

SDG I.D.: GBH79483

| Parameter | Blank | LCS % | LCSD % | LCS RPD | MS % | MSD % | MS RPD | % Rec Limits | % RPD Limits | |
|---|---|---|---|---|---|---|---|---|---|---|
| Methyl ethyl ketone | ND | 94 | 106 | 12.0 | 79 | | | 70 - 130 | 30 | |
| Methyl t-butyl ether (MTBE) | ND | 106 | 114 | 7.3 | 86 | | | 70 - 130 | 30 | |
| Methylacetate | ND | 93 | 107 | 14.0 | 75 | | | 70 - 130 | 30 | |
| Methylcyclohexane | ND | 107 | 113 | 5.5 | 95 | | | 70 - 130 | 30 | |
| Methylene chloride | ND | 86 | 92 | 6.7 | 72 | | | 70 - 130 | 30 | |
| o-Xylene | ND | 108 | 115 | 6.3 | 97 | | | 70 - 130 | 30 | |
| Styrene | ND | 107 | 113 | 5.5 | 95 | | | 70 - 130 | 30 | |
| Tetrachloroethene | ND | 111 | 119 | 7.0 | 102 | | | 70 - 130 | 30 | |
| Toluene | ND | 108 | 115 | 6.3 | 97 | | | 70 - 130 | 30 | |
| trans-1,2-Dichloroethene | ND | 112 | 118 | 5.2 | 93 | | | 70 - 130 | 30 | |
| trans-1,3-Dichloropropene | ND | 111 | 119 | 7.0 | 92 | | | 70 - 130 | 30 | |
| Trichloroethene | ND | 110 | 117 | 6.2 | 100 | | | 70 - 130 | 30 | |
| Trichlorofluoromethane | ND | 101 | 109 | 7.6 | 20 | | | 70 - 130 | 30 | m |
| Trichlorotrifluoroethane | ND | 110 | 119 | 7.9 | 61 | | | 70 - 130 | 30 | m |
| Vinyl chloride | ND | 93 | 102 | 9.2 | 90 | | | 70 - 130 | 30 | |
| % 1,2-dichlorobenzene-d4 | 98 | 100 | 100 | 0.0 | 99 | | | 70 - 130 | 30 | |
| % Bromofluorobenzene | 92 | 102 | 101 | 1.0 | 99 | | | 70 - 130 | 30 | |
| % Dibromofluoromethane | 100 | 100 | 104 | 3.9 | 102 | | | 70 - 130 | 30 | |
| % Toluene-d8 | 99 | 101 | 102 | 1.0 | 100 | | | 70 - 130 | 30 | |

**Comment:**

Additional 8260 criteria: 10% of LCS/LCSD compounds can be outside of acceptance criteria as long as recovery is 40-160%.

l = This parameter is outside laboratory lcs/lcsd specified recovery limits.
m = This parameter is outside laboratory ms/msd specified recovery limits.
r = This parameter is outside laboratory rpd specified recovery limits.

**If there are any questions regarding this data, please call Phoenix Client Services at extension 200.**

RPD - Relative Percent Difference
LCS - Laboratory Control Sample
LCSD - Laboratory Control Sample Duplicate
MS - Matrix Spike
MS Dup - Matrix Spike Duplicate
NC - No Criteria
Intf - Interference

Phyllis Shiller, Laboratory Director
March 16, 2015

# Sample Criteria Exceedences Report

## GBH79483 - HESNY-TUCK



Criteria: NY: 375, 375RRS, 375RS

State: NY

| SampNo | Acode | Phoenix Analyte | Criteria | Result | RL | Criteria | RL Criteria | Analysis Units |
|---|---|---|---|---|---|---|---|---|
| BH79483 | $8260_TCL_SM | Acetone | NY / 375-6.8 Volatiles / Unrestricted Use Soil | 62 | 81 | 50 | 50 | ug/kg |
| BH79483 | $8270_TCLR | Benz(a)anthracene | NY / 375-6.8 Semivolatiles / Residential | 5600 | 560 | 1000 | 1000 | ug/Kg |
| BH79483 | $8270_TCLR | Benz(a)anthracene | NY / 375-6.8 Semivolatiles / Residential Restricted | 5600 | 560 | 1000 | 1000 | ug/Kg |
| BH79483 | $8270_TCLR | Benz(a)anthracene | NY / 375-6.8 Semivolatiles / Unrestricted Use Soil | 5600 | 560 | 1000 | 1000 | ug/Kg |
| BH79483 | $8270_TCLR | Chrysene | NY / 375-6.8 Semivolatiles / Residential | 6000 | 560 | 1000 | 1000 | ug/Kg |
| BH79483 | $8270_TCLR | Chrysene | NY / 375-6.8 Semivolatiles / Residential Restricted | 6000 | 560 | 3900 | 3900 | ug/Kg |
| BH79483 | $8270_TCLR | Chrysene | NY / 375-6.8 Semivolatiles / Unrestricted Use Soil | 6000 | 560 | 1000 | 1000 | ug/Kg |
| BH79483 | $8270_TCLR | Benzo(b)fluoranthene | NY / 375-6.8 Semivolatiles / Residential | 7700 | 560 | 1000 | 1000 | ug/Kg |
| BH79483 | $8270_TCLR | Benzo(b)fluoranthene | NY / 375-6.8 Semivolatiles / Residential Restricted | 7700 | 560 | 1000 | 1000 | ug/Kg |
| BH79483 | $8270_TCLR | Benzo(b)fluoranthene | NY / 375-6.8 Semivolatiles / Unrestricted Use Soil | 7700 | 560 | 1000 | 1000 | ug/Kg |
| BH79483 | $8270_TCLR | Benzo(k)fluoranthene | NY / 375-6.8 Semivolatiles / Residential | 2500 | 560 | 1000 | 1000 | ug/Kg |
| BH79483 | $8270_TCLR | Benzo(k)fluoranthene | NY / 375-6.8 Semivolatiles / Unrestricted Use Soil | 2500 | 560 | 800 | 800 | ug/Kg |
| BH79483 | $8270_TCLR | Benzo(a)pyrene | NY / 375-6.8 Semivolatiles / Residential | 5800 | 560 | 1000 | 1000 | ug/Kg |
| BH79483 | $8270_TCLR | Benzo(a)pyrene | NY / 375-6.8 Semivolatiles / Residential Restricted | 5800 | 560 | 1000 | 1000 | ug/Kg |
| BH79483 | $8270_TCLR | Benzo(a)pyrene | NY / 375-6.8 Semivolatiles / Unrestricted Use Soil | 5800 | 560 | 1000 | 1000 | ug/Kg |
| BH79483 | $8270_TCLR | Indeno(1,2,3-cd)pyrene | NY / 375-6.8 Semivolatiles / Residential | 2700 | 560 | 500 | 500 | ug/Kg |
| BH79483 | $8270_TCLR | Indeno(1,2,3-cd)pyrene | NY / 375-6.8 Semivolatiles / Residential Restricted | 2700 | 560 | 500 | 500 | ug/Kg |
| BH79483 | $8270_TCLR | Indeno(1,2,3-cd)pyrene | NY / 375-6.8 Semivolatiles / Unrestricted Use Soil | 2700 | 560 | 500 | 500 | ug/Kg |
| BH79483 | $8270_TCLR | Dibenz(a,h)anthracene | NY / 375-6.8 Semivolatiles / Residential | 790 | 560 | 330 | 330 | ug/Kg |
| BH79483 | $8270_TCLR | Dibenz(a,h)anthracene | NY / 375-6.8 Semivolatiles / Residential Restricted | 790 | 560 | 330 | 330 | ug/Kg |
| BH79483 | $8270_TCLR | Dibenz(a,h)anthracene | NY / 375-6.8 Semivolatiles / Unrestricted Use Soil | 790 | 560 | 330 | 330 | ug/Kg |
| BH79483 | CR-SM | Chromium | NY / 375-6.8 Metals / Unrestricted Use Soil | 43.1 | 0.37 | 30 | | mg/Kg |
| BH79483 | PB-SM | Lead | NY / 375-6.8 Metals / Unrestricted Use Soil | 180 | 3.7 | 63 | 63 | mg/Kg |
| BH79483 | ZN-SM | Zinc | NY / 375-6.8 Metals / Unrestricted Use Soil | 258 | 3.7 | 109 | 109 | mg/Kg |
| BH79484 | $8260_TCL_SM | Acetone | NY / 375-6.8 Volatiles / Unrestricted Use Soil | 250 | 81 | 50 | 50 | ug/kg |
| BH79484 | $PCB_SMR | PCB-1260 | NY / 375-6.8 PCBs/Pesticides / Residential | 1100 | 410 | 1000 | 1000 | ug/Kg |
| BH79484 | $PCB_SMR | PCB-1242 | NY / 375-6.8 PCBs/Pesticides / Unrestricted Use Soil | ND | 410 | 100 | 100 | ug/Kg |
| BH79484 | $PCB_SMR | PCB-1260 | NY / 375-6.8 PCBs/Pesticides / Unrestricted Use Soil | 1100 | 410 | 100 | 100 | ug/Kg |
| BH79484 | $PCB_SMR | PCB-1248 | NY / 375-6.8 PCBs/Pesticides / Unrestricted Use Soil | ND | 410 | 100 | 100 | ug/Kg |
| BH79484 | $PCB_SMR | PCB-1232 | NY / 375-6.8 PCBs/Pesticides / Unrestricted Use Soil | ND | 410 | 100 | 100 | ug/Kg |
| BH79484 | $PCB_SMR | PCB-1221 | NY / 375-6.8 PCBs/Pesticides / Unrestricted Use Soil | ND | 410 | 100 | 100 | ug/Kg |
| BH79484 | $PCB_SMR | PCB-1016 | NY / 375-6.8 PCBs/Pesticides / Unrestricted Use Soil | ND | 410 | 100 | 100 | ug/Kg |
| BH79484 | $PCB_SMR | PCB-1254 | NY / 375-6.8 PCBs/Pesticides / Unrestricted Use Soil | ND | 410 | 100 | 100 | ug/Kg |
| BH79484 | CR-SM | Chromium | NY / 375-6.8 Metals / Unrestricted Use Soil | 36.5 | 0.39 | 30 | | mg/Kg |
| BH79484 | CU-SM | Copper | NY / 375-6.8 Metals / Unrestricted Use Soil | 150 | 3.9 | 50 | 50 | mg/kg |
| BH79484 | HG-SM | Mercury | NY / 375-6.8 Metals / Unrestricted Use Soil | 0.34 | 0.03 | 0.18 | 0.18 | mg/Kg |
| BH79484 | PB-SM | Lead | NY / 375-6.8 Metals / Residential | 419 | 3.9 | 400 | 400 | mg/Kg |
| BH79484 | PB-SM | Lead | NY / 375-6.8 Metals / Residential Restricted | 419 | 3.9 | 400 | 400 | mg/Kg |
| BH79484 | PB-SM | Lead | NY / 375-6.8 Metals / Unrestricted Use Soil | 419 | 3.9 | 63 | 63 | mg/Kg |
| BH79484 | ZN-SM | Zinc | NY / 375-6.8 Metals / Unrestricted Use Soil | 342 | 3.9 | 109 | 109 | mg/Kg |

# Sample Criteria Exceedences Report

## GBH79483 - HESNY-TUCK



Criteria: NY: 375, 375RRS, 375RS

State: NY

| SampNo | Acode | Phoenix Analyte | Criteria | Result | RL | Criteria | RL Criteria | Analysis Units |
|---|---|---|---|---|---|---|---|---|
| BH79485 | $8260_TCL_SM | Acetone | NY / 375-6.8 Volatiles / Unrestricted Use Soil | 220 | 81 | 50 | 50 | ug/kg |
| BH79485 | AS-SM | Arsenic | NY / 375-6.8 Metals / Residential | 25.1 | 1.0 | 16 | 16 | mg/Kg |
| BH79485 | AS-SM | Arsenic | NY / 375-6.8 Metals / Residential Restricted | 25.1 | 1.0 | 16 | 16 | mg/Kg |
| BH79485 | AS-SM | Arsenic | NY / 375-6.8 Metals / Unrestricted Use Soil | 25.1 | 1.0 | 13 | 13 | mg/Kg |
| BH79485 | BA-SM | Barium | NY / 375-6.8 Metals / Residential | 1120 | 0.51 | 350 | 350 | mg/Kg |
| BH79485 | BA-SM | Barium | NY / 375-6.8 Metals / Residential Restricted | 1120 | 0.51 | 400 | 400 | mg/Kg |
| BH79485 | BA-SM | Barium | NY / 375-6.8 Metals / Unrestricted Use Soil | 1120 | 0.51 | 350 | 350 | mg/Kg |
| BH79485 | CD-SM | Cadmium | NY / 375-6.8 Metals / Residential | 3.12 | 0.51 | 2.5 | 2.5 | mg/Kg |
| BH79485 | CD-SM | Cadmium | NY / 375-6.8 Metals / Unrestricted Use Soil | 3.12 | 0.51 | 2.5 | 2.5 | mg/Kg |
| BH79485 | CR-SM | Chromium | NY / 375-6.8 Metals / Unrestricted Use Soil | 82.0 | 0.51 | 30 | | mg/Kg |
| BH79485 | CU-SM | Copper | NY / 375-6.8 Metals / Unrestricted Use Soil | 69.0 | 0.51 | 50 | 50 | mg/kg |
| BH79485 | HG-SM | Mercury | NY / 375-6.8 Metals / Unrestricted Use Soil | 0.29 | 0.04 | 0.18 | 0.18 | mg/Kg |
| BH79485 | PB-SM | Lead | NY / 375-6.8 Metals / Residential | 589 | 5.1 | 400 | 400 | mg/Kg |
| BH79485 | PB-SM | Lead | NY / 375-6.8 Metals / Residential Restricted | 589 | 5.1 | 400 | 400 | mg/Kg |
| BH79485 | PB-SM | Lead | NY / 375-6.8 Metals / Unrestricted Use Soil | 589 | 5.1 | 63 | 63 | mg/Kg |
| BH79485 | ZN-SM | Zinc | NY / 375-6.8 Metals / Unrestricted Use Soil | 216 | 5.1 | 109 | 109 | mg/Kg |
| BH79486 | $8270_TCLR | Benz(a)anthracene | NY / 375-6.8 Semivolatiles / Residential | 1200 | 530 | 1000 | 1000 | ug/Kg |
| BH79486 | $8270_TCLR | Benz(a)anthracene | NY / 375-6.8 Semivolatiles / Residential Restricted | 1200 | 530 | 1000 | 1000 | ug/Kg |
| BH79486 | $8270_TCLR | Benz(a)anthracene | NY / 375-6.8 Semivolatiles / Unrestricted Use Soil | 1200 | 530 | 1000 | 1000 | ug/Kg |
| BH79486 | $8270_TCLR | Chrysene | NY / 375-6.8 Semivolatiles / Residential | 1200 | 530 | 1000 | 1000 | ug/Kg |
| BH79486 | $8270_TCLR | Chrysene | NY / 375-6.8 Semivolatiles / Unrestricted Use Soil | 1200 | 530 | 1000 | 1000 | ug/Kg |
| BH79486 | $8270_TCLR | Benzo(b)fluoranthene | NY / 375-6.8 Semivolatiles / Residential | 1500 | 530 | 1000 | 1000 | ug/Kg |
| BH79486 | $8270_TCLR | Benzo(b)fluoranthene | NY / 375-6.8 Semivolatiles / Residential Restricted | 1500 | 530 | 1000 | 1000 | ug/Kg |
| BH79486 | $8270_TCLR | Benzo(b)fluoranthene | NY / 375-6.8 Semivolatiles / Unrestricted Use Soil | 1500 | 530 | 1000 | 1000 | ug/Kg |
| BH79486 | $8270_TCLR | Benzo(a)pyrene | NY / 375-6.8 Semivolatiles / Residential | 1200 | 530 | 1000 | 1000 | ug/Kg |
| BH79486 | $8270_TCLR | Benzo(a)pyrene | NY / 375-6.8 Semivolatiles / Residential Restricted | 1200 | 530 | 1000 | 1000 | ug/Kg |
| BH79486 | $8270_TCLR | Benzo(a)pyrene | NY / 375-6.8 Semivolatiles / Unrestricted Use Soil | 1200 | 530 | 1000 | 1000 | ug/Kg |
| BH79486 | CU-SM | Copper | NY / 375-6.8 Metals / Unrestricted Use Soil | 60.7 | 0.36 | 50 | 50 | mg/kg |
| BH79487 | $8260_TCL_SM | Acetone | NY / 375-6.8 Volatiles / Unrestricted Use Soil | 61 | 81 | 50 | 50 | ug/kg |
| BH79487 | $8270_TCLR | Benz(a)anthracene | NY / 375-6.8 Semivolatiles / Residential | 2200 | 530 | 1000 | 1000 | ug/Kg |
| BH79487 | $8270_TCLR | Benz(a)anthracene | NY / 375-6.8 Semivolatiles / Residential Restricted | 2200 | 530 | 1000 | 1000 | ug/Kg |
| BH79487 | $8270_TCLR | Benz(a)anthracene | NY / 375-6.8 Semivolatiles / Unrestricted Use Soil | 2200 | 530 | 1000 | 1000 | ug/Kg |
| BH79487 | $8270_TCLR | Chrysene | NY / 375-6.8 Semivolatiles / Residential | 2300 | 530 | 1000 | 1000 | ug/Kg |
| BH79487 | $8270_TCLR | Chrysene | NY / 375-6.8 Semivolatiles / Unrestricted Use Soil | 2300 | 530 | 1000 | 1000 | ug/Kg |
| BH79487 | $8270_TCLR | Benzo(b)fluoranthene | NY / 375-6.8 Semivolatiles / Residential | 2900 | 530 | 1000 | 1000 | ug/Kg |
| BH79487 | $8270_TCLR | Benzo(b)fluoranthene | NY / 375-6.8 Semivolatiles / Residential Restricted | 2900 | 530 | 1000 | 1000 | ug/Kg |
| BH79487 | $8270_TCLR | Benzo(b)fluoranthene | NY / 375-6.8 Semivolatiles / Unrestricted Use Soil | 2900 | 530 | 1000 | 1000 | ug/Kg |
| BH79487 | $8270_TCLR | Benzo(k)fluoranthene | NY / 375-6.8 Semivolatiles / Residential | 1100 | 530 | 1000 | 1000 | ug/Kg |
| BH79487 | $8270_TCLR | Benzo(k)fluoranthene | NY / 375-6.8 Semivolatiles / Unrestricted Use Soil | 1100 | 530 | 800 | 800 | ug/Kg |
| BH79487 | $8270_TCLR | Benzo(a)pyrene | NY / 375-6.8 Semivolatiles / Residential | 2000 | 530 | 1000 | 1000 | ug/Kg |

# Sample Criteria Exceedences Report

## GBH79483 - HESNY-TUCK

Criteria: NY: 375, 375RRS, 375RS
State: NY

| SampNo | Acode | Phoenix Analyte | Criteria | Result | RL | Criteria | RL Criteria | Analysis Units |
|---|---|---|---|---|---|---|---|---|
| BH79487 | $8270_TCLR | Benzo(a)pyrene | NY / 375-6.8 Semivolatiles / Residential Restricted | 2000 | 530 | 1000 | 1000 | ug/Kg |
| BH79487 | $8270_TCLR | Benzo(a)pyrene | NY / 375-6.8 Semivolatiles / Unrestricted Use Soil | 2000 | 530 | 1000 | 1000 | ug/Kg |
| BH79488 | $8270_TCLR | Phenol | NY / 375-6.8 Semivolatiles / Unrestricted Use Soil | ND | 1300 | 330 | 330 | ug/Kg |
| BH79488 | $8270_TCLR | 2-Methylphenol (o-cresol) | NY / 375-6.8 Semivolatiles / Unrestricted Use Soil | ND | 1300 | 330 | 330 | ug/Kg |
| BH79488 | $8270_TCLR | Benz(a)anthracene | NY / 375-6.8 Semivolatiles / Residential | 4500 | 1300 | 1000 | 1000 | ug/Kg |
| BH79488 | $8270_TCLR | Benz(a)anthracene | NY / 375-6.8 Semivolatiles / Residential Restricted | 4500 | 1300 | 1000 | 1000 | ug/Kg |
| BH79488 | $8270_TCLR | Benz(a)anthracene | NY / 375-6.8 Semivolatiles / Unrestricted Use Soil | 4500 | 1300 | 1000 | 1000 | ug/Kg |
| BH79488 | $8270_TCLR | Chrysene | NY / 375-6.8 Semivolatiles / Residential | 4800 | 1300 | 1000 | 1000 | ug/Kg |
| BH79488 | $8270_TCLR | Chrysene | NY / 375-6.8 Semivolatiles / Residential Restricted | 4800 | 1300 | 3900 | 3900 | ug/Kg |
| BH79488 | $8270_TCLR | Chrysene | NY / 375-6.8 Semivolatiles / Unrestricted Use Soil | 4800 | 1300 | 1000 | 1000 | ug/Kg |
| BH79488 | $8270_TCLR | Benzo(b)fluoranthene | NY / 375-6.8 Semivolatiles / Residential | 5900 | 1300 | 1000 | 1000 | ug/Kg |
| BH79488 | $8270_TCLR | Benzo(b)fluoranthene | NY / 375-6.8 Semivolatiles / Residential Restricted | 5900 | 1300 | 1000 | 1000 | ug/Kg |
| BH79488 | $8270_TCLR | Benzo(b)fluoranthene | NY / 375-6.8 Semivolatiles / Unrestricted Use Soil | 5900 | 1300 | 1000 | 1000 | ug/Kg |
| BH79488 | $8270_TCLR | Benzo(k)fluoranthene | NY / 375-6.8 Semivolatiles / Residential | 2300 | 1300 | 1000 | 1000 | ug/Kg |
| BH79488 | $8270_TCLR | Benzo(k)fluoranthene | NY / 375-6.8 Semivolatiles / Unrestricted Use Soil | 2300 | 1300 | 800 | 800 | ug/Kg |
| BH79488 | $8270_TCLR | Benzo(a)pyrene | NY / 375-6.8 Semivolatiles / Residential | 4000 | 1300 | 1000 | 1000 | ug/Kg |
| BH79488 | $8270_TCLR | Benzo(a)pyrene | NY / 375-6.8 Semivolatiles / Residential Restricted | 4000 | 1300 | 1000 | 1000 | ug/Kg |
| BH79488 | $8270_TCLR | Benzo(a)pyrene | NY / 375-6.8 Semivolatiles / Unrestricted Use Soil | 4000 | 1300 | 1000 | 1000 | ug/Kg |
| BH79488 | $8270_TCLR | Indeno(1,2,3-cd)pyrene | NY / 375-6.8 Semivolatiles / Residential | ND | 1300 | 500 | 500 | ug/Kg |
| BH79488 | $8270_TCLR | Indeno(1,2,3-cd)pyrene | NY / 375-6.8 Semivolatiles / Residential Restricted | ND | 1300 | 500 | 500 | ug/Kg |
| BH79488 | $8270_TCLR | Indeno(1,2,3-cd)pyrene | NY / 375-6.8 Semivolatiles / Unrestricted Use Soil | ND | 1300 | 500 | 500 | ug/Kg |
| BH79488 | $8270_TCLR | Dibenz(a,h)anthracene | NY / 375-6.8 Semivolatiles / Residential | ND | 1300 | 330 | 330 | ug/Kg |
| BH79488 | $8270_TCLR | Dibenz(a,h)anthracene | NY / 375-6.8 Semivolatiles / Residential Restricted | ND | 1300 | 330 | 330 | ug/Kg |
| BH79488 | $8270_TCLR | Dibenz(a,h)anthracene | NY / 375-6.8 Semivolatiles / Unrestricted Use Soil | ND | 1300 | 330 | 330 | ug/Kg |
| BH79488 | $PCB_SMR | PCB-1260 | NY / 375-6.8 PCBs/Pesticides / Unrestricted Use Soil | 190 | 76 | 100 | 100 | ug/Kg |
| BH79488 | CU-SM | Copper | NY / 375-6.8 Metals / Unrestricted Use Soil | 57.7 | 0.35 | 50 | 50 | mg/kg |
| BH79488 | HG-SM | Mercury | NY / 375-6.8 Metals / Unrestricted Use Soil | 0.28 | 0.03 | 0.18 | 0.18 | mg/Kg |
| BH79489 | $8260_TCL_SM | Benzene | NY / 375-6.8 Volatiles / Unrestricted Use Soil | 1800 | 8.1 | 60 | 60 | ug/kg |
| BH79489 | $8260_TCL_SM | Ethylbenzene | NY / 375-6.8 Volatiles / Unrestricted Use Soil | 1200 | 8.1 | 1000 | 1000 | ug/kg |
| BH79489 | $8260_TCL_SM | Total Xylenes | NY / 375-6.8 Volatiles / Unrestricted Use Soil | 4500 | 8.1 | 260 | 260 | ug/kg |
| BH79489 | $8270_TCLR | Benz(a)anthracene | NY / 375-6.8 Semivolatiles / Residential | 1500 | 810 | 1000 | 1000 | ug/Kg |
| BH79489 | $8270_TCLR | Benz(a)anthracene | NY / 375-6.8 Semivolatiles / Residential Restricted | 1500 | 810 | 1000 | 1000 | ug/Kg |
| BH79489 | $8270_TCLR | Benz(a)anthracene | NY / 375-6.8 Semivolatiles / Unrestricted Use Soil | 1500 | 810 | 1000 | 1000 | ug/Kg |
| BH79489 | $8270_TCLR | Chrysene | NY / 375-6.8 Semivolatiles / Residential | 1500 | 810 | 1000 | 1000 | ug/Kg |
| BH79489 | $8270_TCLR | Chrysene | NY / 375-6.8 Semivolatiles / Unrestricted Use Soil | 1500 | 810 | 1000 | 1000 | ug/Kg |
| BH79489 | $8270_TCLR | Benzo(b)fluoranthene | NY / 375-6.8 Semivolatiles / Residential | 1500 | 810 | 1000 | 1000 | ug/Kg |
| BH79489 | $8270_TCLR | Benzo(b)fluoranthene | NY / 375-6.8 Semivolatiles / Residential Restricted | 1500 | 810 | 1000 | 1000 | ug/Kg |
| BH79489 | $8270_TCLR | Benzo(b)fluoranthene | NY / 375-6.8 Semivolatiles / Unrestricted Use Soil | 1500 | 810 | 1000 | 1000 | ug/Kg |
| BH79489 | $8270_TCLR | Benzo(a)pyrene | NY / 375-6.8 Semivolatiles / Residential | 1200 | 810 | 1000 | 1000 | ug/Kg |
| BH79489 | $8270_TCLR | Benzo(a)pyrene | NY / 375-6.8 Semivolatiles / Residential Restricted | 1200 | 810 | 1000 | 1000 | ug/Kg |

# Sample Criteria Exceedences Report

## GBH79483 - HESNY-TUCK

Criteria: NY: 375, 375RRS, 375RS

State: NY

| SampNo | Acode | Phoenix Analyte | Criteria | Result | RL | Criteria | RL Criteria | Analysis Units |
|---|---|---|---|---|---|---|---|---|
| BH79489 | $8270_TCLR | Benzo(a)pyrene | NY / 375-6.8 Semivolatiles / Unrestricted Use Soil | 1200 | 810 | 1000 | 1000 | ug/Kg |
| BH79489 | $8270_TCLR | Indeno(1,2,3-cd)pyrene | NY / 375-6.8 Semivolatiles / Residential | 660 | 500 | 500 | 500 | ug/Kg |
| BH79489 | $8270_TCLR | Indeno(1,2,3-cd)pyrene | NY / 375-6.8 Semivolatiles / Residential Restricted | 660 | 500 | 500 | 500 | ug/Kg |
| BH79489 | $8270_TCLR | Indeno(1,2,3-cd)pyrene | NY / 375-6.8 Semivolatiles / Unrestricted Use Soil | 660 | 500 | 500 | 500 | ug/Kg |
| BH79489 | $DIOX_SMR | 1,4-dioxane | NY / 375-6.8 Volatiles / Residential | ND | 17000 | 9800 | 9800 | ug/kg |
| BH79489 | $DIOX_SMR | 1,4-dioxane | NY / 375-6.8 Volatiles / Residential Restricted | ND | 17000 | 13000 | 13000 | ug/kg |
| BH79489 | $DIOX_SMR | 1,4-dioxane | NY / 375-6.8 Volatiles / Unrestricted Use Soil | ND | 17000 | 100 | 100 | ug/kg |
| BH79489 | $PCB_SMR | PCB-1254 | NY / 375-6.8 PCBs/Pesticides / Unrestricted Use Soil | ND | 120 | 100 | 100 | ug/Kg |
| BH79489 | $PCB_SMR | PCB-1260 | NY / 375-6.8 PCBs/Pesticides / Unrestricted Use Soil | 130 | 120 | 100 | 100 | ug/Kg |
| BH79489 | $PCB_SMR | PCB-1248 | NY / 375-6.8 PCBs/Pesticides / Unrestricted Use Soil | ND | 120 | 100 | 100 | ug/Kg |
| BH79489 | $PCB_SMR | PCB-1232 | NY / 375-6.8 PCBs/Pesticides / Unrestricted Use Soil | ND | 120 | 100 | 100 | ug/Kg |
| BH79489 | $PCB_SMR | PCB-1221 | NY / 375-6.8 PCBs/Pesticides / Unrestricted Use Soil | ND | 120 | 100 | 100 | ug/Kg |
| BH79489 | $PCB_SMR | PCB-1016 | NY / 375-6.8 PCBs/Pesticides / Unrestricted Use Soil | ND | 120 | 100 | 100 | ug/Kg |
| BH79489 | $PCB_SMR | PCB-1242 | NY / 375-6.8 PCBs/Pesticides / Unrestricted Use Soil | ND | 120 | 100 | 100 | ug/Kg |
| BH79489 | AG-SM | Silver | NY / 375-6.8 Metals / Unrestricted Use Soil | 5.10 | 0.58 | 2 | 2 | mg/Kg |
| BH79489 | AS-SM | Arsenic | NY / 375-6.8 Metals / Residential | 17.1 | 1.2 | 16 | 16 | mg/Kg |
| BH79489 | AS-SM | Arsenic | NY / 375-6.8 Metals / Residential Restricted | 17.1 | 1.2 | 16 | 16 | mg/Kg |
| BH79489 | AS-SM | Arsenic | NY / 375-6.8 Metals / Unrestricted Use Soil | 17.1 | 1.2 | 13 | 13 | mg/Kg |
| BH79489 | CD-SM | Cadmium | NY / 375-6.8 Metals / Residential | 3.25 | 0.58 | 2.5 | 2.5 | mg/Kg |
| BH79489 | CD-SM | Cadmium | NY / 375-6.8 Metals / Unrestricted Use Soil | 3.25 | 0.58 | 2.5 | 2.5 | mg/Kg |
| BH79489 | CR-SM | Chromium | NY / 375-6.8 Metals / Unrestricted Use Soil | 84.7 | 0.58 | 30 | | mg/Kg |
| BH79489 | CU-SM | Copper | NY / 375-6.8 Metals / Unrestricted Use Soil | 90.9 | 0.58 | 50 | 50 | mg/kg |
| BH79489 | HG-SM | Mercury | NY / 375-6.8 Metals / Unrestricted Use Soil | 0.57 | 0.05 | 0.18 | 0.18 | mg/Kg |
| BH79489 | NI-SM | Nickel | NY / 375-6.8 Metals / Unrestricted Use Soil | 35.0 | 0.58 | 30 | 30 | mg/Kg |
| BH79489 | PB-SM | Lead | NY / 375-6.8 Metals / Residential | 570 | 5.8 | 400 | 400 | mg/Kg |
| BH79489 | PB-SM | Lead | NY / 375-6.8 Metals / Residential Restricted | 570 | 5.8 | 400 | 400 | mg/Kg |
| BH79489 | PB-SM | Lead | NY / 375-6.8 Metals / Unrestricted Use Soil | 570 | 5.8 | 63 | 63 | mg/Kg |
| BH79489 | ZN-SM | Zinc | NY / 375-6.8 Metals / Unrestricted Use Soil | 677 | 5.8 | 109 | 109 | mg/Kg |

Phoenix Laboratories does not assume responsibility for the data contained in this report. It is provided as an additional tool to identify requested criteria exceedences. All efforts are made to ensure the accuracy of the data (obtained from appropriate agencies). A lack of exceedence information does not necessarily suggest conformance to the criteria. It is ultimately the site professional's responsibility to determine appropriate compliance.

**Environmental Laboratories, Inc.**
**587 East Middle Turnpike, P.O.Box 370, Manchester, CT 06045**
**Tel. (860) 645-1102 Fax (860) 645-0823**

# NY Temperature Narration

**March 16, 2015**

**SDG I.D.: GBH79483**

The samples in this delivery group were received at 4°C.
(Note acceptance criteria is above freezing up to 6°C)

# PHOENIX Environmental Laboratories, Inc.

## NY/NJ CHAIN OF CUSTODY RECORD

587 East Middle Turnpike, P.O. Box 370, Manchester, CT 06040
Email: info@phoenixlabs.com Fax (860) 645-0823
**Client Services (860) 645-8726**

Temp 4 Pg 1 of 1

**Data Delivery:**
☐ Fax #:
☒ Email: info@hesny.com

Customer:
Address: HYDROENVIRONMENTAL SOLUTIONS
ONE DEANS BRIDGE ROAD
SOMERS, NEW YORK 10589

Project: 109 Marbledale Rd, Tuckahoe, NY
Report to: Tim Carr
Invoice to:

Project P.O:
Phone #: 914-276-2560
Fax #: 914-276-2664
tcarr@hesny.com

**Client Sample - Information - Identification**

Sampler's Signature: RGeffen Date: 3/3/15

**Matrix Code:**
DW=drinking water WW=wastewater S=soil/solid O=oil
GW=groundwater SL=sludge A=air X=other

Analysis Request

| Phoenix Sample # | Customer Sample Identification | Sample Matrix | Date Sampled | Time Sampled | TL VOC | TCL SVOC | TCL PCB | Tal Metals | Cyanide | Arsenic | Soil VOA Methanol [ ] S. Bisulfate [X] H2O | GL Soil container ( 8 ) oz | GL Soil container ( ) oz | 40 ml VOA Vial [ ] As is [ ] HCl | GL Amber 1000ml [ ] As is [ ] H2SO4 | PL As is [ ] 1250ml [ ] 500ml [ ] 1000ml | PL H2SO4 [ ] 1250ml [ ] 500ml | PL HNO3 250ml | PL NaOH 250ml | Bacteria Bottle |
|---|---|---|---|---|---|---|---|---|---|---|---|---|---|---|---|---|---|---|---|---|
| 79483 | TB-3(2-4) | S | 3/3/15 | 11:00 | ↓ | ↓ | ↓ | ↓ | ↓ | ↓ | 3 | 2 | | | | | | | | |
| 79484 | TB-4 (24-26) | ↓ | 3/3/15 | 2:00 | ↓ | ↓ | ↓ | ↓ | ↓ | ↓ | ↓ | ↓ | | | | | | | | |
| 79485 | TB-4 (30-32) | ↓ | 3/3/15 | 2:00 | ↓ | ↓ | ↓ | ↓ | ↓ | ↓ | ↓ | ↓ | | | | | | | | |
| 79486 | TB-9 (2-4) | ↓ | 3/2/15 | 12:00 | ↓ | ↓ | ↓ | ↓ | ↓ | ↓ | ↓ | ↓ | | | | | | | | |
| 79487 | TB-9 (7-9) | ↓ | 3/2/15 | 12:00 | ↓ | ↓ | ↓ | ↓ | ↓ | ↓ | ↓ | ↓ | | | | | | | | |
| 79488 | TB-10 (4-6) | ↓ | 3/2/15 | 3:00 | ↓ | ↓ | ↓ | ↓ | ↓ | ↓ | ↓ | ↓ | | | | | | | | |
| 79489 | TB-10 (32-34) | ↓ | 3/3/15 | 10:00 | ↓ | ↓ | ↓ | ↓ | ↓ | ↓ | ↓ | ↓ | | | | | | | | |

| Relinquished by: | Accepted by: | Date: | Time: |
|---|---|---|---|
| [signature] | [signature] | 3-4-15 | 11:50 |
| [signature] | [signature] | 3/4/15 | 16:20 |
| | | | |

**Comments, Special Requirements or Regulations:**

**Turnaround:**
☐ 1 Day*
☐ 2 Days*
☐ 3 Days*
☒ Standard
☐ Other
* SURCHARGE APPLIES

**NJ**
☐ Res. Criteria
☐ Non-Res. Criteria
☐ Impact to GW Soil Cleanup Criteria
☐ GW Criteria

**NY**
☐ TAGM 4046 GW
☐ TAGM 4046 SOIL
☒ NY375 Unrestricted Soil
☒ NY375 Residential Soil
☒ NY375 Restricted Non-Residential Soil

**Data Format**
☐ Phoenix Std Report
☒ Excel
☒ PDF
☐ GIS/Key
☒ EQuIS
☐ NJ Hazsite EDD
☐ NY EZ EDD (ASP)
☐ Other

**Data Package**
☐ NJ Reduced Deliv. *
☐ NY Enhanced (ASP B) *
☐ Other

**State where samples were collected:** NY

PHOENIX
Environmental Laboratories, Inc.

Monday, March 16, 2015

Attn: Mr. William Canavan
HydroEnvironmental Solutions, Inc.
One Deans Bridge Rd
Somers NY 10589

Project ID: 109 MARBLEDALE RD TUCKAHOE NY
Sample ID#s: BH79490

This laboratory is in compliance with the NELAC requirements of procedures used except where indicated.

This report contains results for the parameters tested, under the sampling conditions described on the Chain Of Custody, as received by the laboratory.

All soils, solids and sludges are reported on a dry weight basis unless otherwise noted in the sample comments.

A scanned version of the COC form accompanies the analytical report and is an exact duplicate of the original.

If you have any questions concerning this testing, please do not hesitate to contact Phoenix Client Services at ext. 200.

Sincerely yours,

Phyllis Shiller

Phyllis Shiller
Laboratory Director

NELAC - #NY11301
CT Lab Registration #PH-0618
MA Lab Registration #MA-CT-007
ME Lab Registration #CT-007
NH Lab Registration #213693-A,B
NJ Lab Registration #CT-003
NY Lab Registration #11301
PA Lab Registration #68-03530
RI Lab Registration #63
VT Lab Registration #VT11301

587 East Middle Turnpike, P.O. Box 370, Manchester, CT 06040
Telephone (860) 645-1102 Fax (860) 645-0823

PHOENIX

Environmental Laboratories, Inc.
587 East Middle Turnpike, P.O.Box 370, Manchester, CT 06045
Tel. (860) 645-1102 Fax (860) 645-0823

ACCREDITED IN ACCORDANCE WITH nelac
NY # 11301

# SDG Comments

March 16, 2015

SDG I.D.: GBH79490

---

BH79490 - The client provided an ENCORE sample. Phoenix prepared sample per method 5035.

PHOENIX

Environmental Laboratories, Inc.
587 East Middle Turnpike, P.O.Box 370, Manchester, CT 06045
Tel. (860) 645-1102 Fax (860) 645-0823

ACCREDITED IN ACCORDANCE WITH nelac NY # 11301

# Analysis Report

March 16, 2015

FOR: Attn: Mr. William Canavan
HydroEnvironmental Solutions, Inc.
One Deans Bridge Rd
Somers NY 10589

| Sample Information | | Custody Information | | Date | Time |
|---|---|---|---|---|---|
| Matrix: | SOLID | Collected by: | | 03/03/15 | 14:00 |
| Location Code: | HESNY-TUCK | Received by: | SW | 03/04/15 | 16:20 |
| Rush Request: | 72 Hour | Analyzed by: | see "By" below | | |
| P.O.#: | | | | | |

## Laboratory Data

SDG ID: GBH79490
Phoenix ID: BH79490

Project ID: 109 MARBLEDALE RD TUCKAHOE NY
Client ID: TB-4 (0-10)

| Parameter | Result | RL/ PQL | LOD/ MDL | Units | Date/Time | By | Reference |
|---|---|---|---|---|---|---|---|
| Silver | 1.17 | 0.34 | | mg/Kg | 03/05/15 | LK | SW6010C |
| Aluminum | 9970 | 51 | | mg/Kg | 03/05/15 | LK | SW6010C |
| Arsenic | 9.2 | 0.7 | | mg/Kg | 03/05/15 | LK | SW6010C |
| Barium | 176 | 0.34 | | mg/Kg | 03/05/15 | LK | SW6010C |
| Beryllium | 0.28 | 0.27 | | mg/Kg | 03/05/15 | LK | SW6010C |
| Calcium | 21600 | 51 | | mg/Kg | 03/05/15 | LK | SW6010C |
| Cadmium | 1.70 | 0.34 | | mg/Kg | 03/05/15 | LK | SW6010C |
| Cobalt | 10.9 | 0.34 | | mg/Kg | 03/05/15 | LK | SW6010C |
| Chromium | 39.0 | 0.34 | | mg/Kg | 03/05/15 | LK | SW6010C |
| Copper | 249 | 3.4 | | mg/kg | 03/05/15 | LK | SW6010C |
| Iron | 70700 | 51 | | mg/Kg | 03/05/15 | LK | SW6010C |
| Mercury | 0.27 | 0.03 | | mg/Kg | 03/05/15 | MA | SW7471B |
| Potassium | 1860 | 5.1 | | mg/Kg | 03/05/15 | LK | SW6010C |
| Magnesium | 7280 | 51 | | mg/Kg | 03/05/15 | LK | SW6010C |
| Manganese | 459 | 3.4 | | mg/Kg | 03/05/15 | LK | SW6010C |
| Sodium | 474 | 5.1 | | mg/Kg | 03/05/15 | LK | SW6010C |
| Nickel | 38.2 | 0.34 | | mg/Kg | 03/05/15 | LK | SW6010C |
| Lead | 378 | 3.4 | | mg/Kg | 03/05/15 | LK | SW6010C |
| Antimony | < 3.4 | 3.4 | | mg/Kg | 03/05/15 | LK | SW6010C |
| Selenium | < 1.4 | 1.4 | | mg/Kg | 03/05/15 | LK | SW6010C |
| TCLP Silver | < 0.10 | 0.10 | | mg/L | 03/05/15 | EK | SW6010C |
| TCLP Arsenic | < 0.10 | 0.10 | | mg/L | 03/05/15 | EK | SW6010C |
| TCLP Barium | 1.64 | 0.10 | | mg/L | 03/05/15 | EK | SW6010C |
| TCLP Cadmium | < 0.050 | 0.050 | | mg/L | 03/05/15 | EK | SW6010C |
| TCLP Chromium | < 0.10 | 0.10 | | mg/L | 03/05/15 | EK | SW6010C |
| TCLP Copper | 0.17 | 0.10 | | mg/L | 03/05/15 | EK | SW6010C |
| TCLP Mercury | < 0.0002 | 0.0002 | | mg/L | 03/05/15 | MA | SW7470A |
| TCLP Nickel | < 0.10 | 0.10 | | mg/L | 03/05/15 | EK | SW6010C |

Project ID: 109 MARBLEDALE RD TUCKAHOE NY
Client ID: TB-4 (0-10)

Phoenix I.D.: BH79490

| Parameter | Result | RL/ PQL | LOD/ MDL | Units | Date/Time | By | Reference | |
|---|---|---|---|---|---|---|---|---|
| TCLP Lead | 5.21 | 0.10 | | mg/L | 03/05/15 | EK | SW6010C | |
| TCLP Selenium | < 0.10 | 0.10 | | mg/L | 03/05/15 | EK | SW6010C | |
| TCLP Zinc | 3.73 | 0.10 | | mg/L | 03/05/15 | EK | SW6010C | |
| Thallium | < 3.1 | 3.1 | | mg/Kg | 03/05/15 | LK | SW6010C | |
| TCLP Metals Digestion | Completed | | | | 03/05/15 | I/I | SW3005A | |
| Vanadium | 41.5 | 0.34 | | mg/Kg | 03/05/15 | LK | SW6010C | |
| Zinc | 407 | 3.4 | | mg/Kg | 03/05/15 | LK | SW6010C | |
| Percent Solid | 86 | | | % | 03/04/15 | I | SW846-%Solid | |
| Corrosivity | Negative | | | Pos/Neg | 03/04/15 | DH/KDB | SW846-Corr | 1 |
| Flash Point | >200 | 200 | | Degree F | 03/05/15 | I | SW1010A | |
| Chromium, Hexavalent | < 0.47 | 0.47 | | mg/Kg | 03/05/15 10:14 | KDB | SW7196A | |
| Ignitability | Passed | 140 | | degree F | 03/05/15 | I | SW846-Ignit | 1 |
| pH - Soil | 8.17 | 0.10 | | pH Units | 03/04/15 20:00 | DH/KDB | SW9045 | 1 |
| Reactivity Cyanide | < 5.8 | 5.8 | | mg/Kg | 03/05/15 | O/B/E | SW846-React | 1 |
| Reactivity Sulfide | < 20 | 20 | | mg/Kg | 03/09/15 | EG | SW-7.3 | 1 |
| Reactivity | Negative | | | Pos/Neg | 03/09/15 | EG | SW846-React | 1 |
| Redox Potential | 200 | 1.0 | | mV | 03/04/15 | DH/KDB | SM2580B-09 | 1 |
| Total Cyanide | < 0.58 | 0.58 | | mg/Kg | 03/04/15 | O/B/E | SW9012B | |
| Soil Extraction for PCB | Completed | | | | 03/04/15 | CC | SW3545A | |
| Soil Extraction for Pesticide | Completed | | | | 03/04/15 | CC/H | SW3545A | |
| Soil Extraction for SVOA | Completed | | | | 03/05/15 | BJ/VH | SW3545A | |
| Mercury Digestion | Completed | | | | 03/05/15 | I/I | SW7471B | |
| Ext. of Petroleum Hydrocarbons | Completed | | | | 03/04/15 | BC/V | SW3545A | |
| TCLP Digestion Mercury | Completed | | | | 03/05/15 | I/I | SW7470A | |
| TCLP Herbicides Extraction | Completed | | | | 03/06/15 | W/D | SW8150 MOD | |
| TCLP Extraction for Metals | Completed | | | | 03/04/15 | I | SW1311 | |
| TCLP Extraction for Organics | Completed | | | | 03/04/15 | I | SW1311 | |
| TCLP Pesticides Extraction | Completed | | | | 03/05/15 | L | SW3510C | |
| TCLP Semi-Volatile Extraction | Completed | | | | 03/05/15 | L | SW3510C | |
| Total Metals Digest | Completed | | | | 03/04/15 | CB/AG | SW3050B | |

## Polychlorinated Biphenyls

| | | | | | | | |
|---|---|---|---|---|---|---|---|
| PCB-1016 | ND | 76 | | ug/Kg | 03/06/15 | AW | SW8082A |
| PCB-1221 | ND | 76 | | ug/Kg | 03/06/15 | AW | SW8082A |
| PCB-1232 | ND | 76 | | ug/Kg | 03/06/15 | AW | SW8082A |
| PCB-1242 | ND | 76 | | ug/Kg | 03/06/15 | AW | SW8082A |
| PCB-1248 | ND | 76 | | ug/Kg | 03/06/15 | AW | SW8082A |
| PCB-1254 | ND | 76 | | ug/Kg | 03/06/15 | AW | SW8082A |
| PCB-1260 | ND | 76 | | ug/Kg | 03/06/15 | AW | SW8082A |
| PCB-1262 | ND | 76 | | ug/Kg | 03/06/15 | AW | SW8082A |
| PCB-1268 | ND | 76 | | ug/Kg | 03/06/15 | AW | SW8082A |
| **QA/QC Surrogates** | | | | | | | |
| % DCBP | 50 | | | % | 03/06/15 | AW | 30 - 150 % |
| % TCMX | 38 | | | % | 03/06/15 | AW | 30 - 150 % |

## Pesticides - Soil

| | | | | | | | |
|---|---|---|---|---|---|---|---|
| 4,4' -DDD | ND | 11 | 11 | ug/Kg | 03/06/15 | PS | SW8081B |
| 4,4' -DDE | ND | 11 | 11 | ug/Kg | 03/06/15 | PS | SW8081B |
| 4,4' -DDT | ND | 11 | 11 | ug/Kg | 03/06/15 | PS | SW8081B |
| a-BHC | ND | 19 | 19 | ug/Kg | 03/06/15 | PS | SW8081B |

Project ID: 109 MARBLEDALE RD TUCKAHOE NY
Client ID: TB-4 (0-10)

Phoenix I.D.: BH79490

| Parameter | Result | RL/ PQL | LOD/ MDL | Units | Date/Time | By | Reference | |
|---|---|---|---|---|---|---|---|---|
| a-Chlordane | ND | 19 | 19 | ug/Kg | 03/06/15 | PS | SW8081B | |
| Aldrin | ND | 5.0 | 5.0 | ug/Kg | 03/06/15 | PS | SW8081B | |
| b-BHC | ND | 19 | 19 | ug/Kg | 03/06/15 | PS | SW8081B | |
| Chlordane | ND | 190 | 190 | ug/Kg | 03/06/15 | PS | SW8081B | |
| d-BHC | ND | 38 | 38 | ug/Kg | 03/06/15 | PS | SW8081B | |
| Dieldrin | ND | 5.0 | 5.0 | ug/Kg | 03/06/15 | PS | SW8081B | |
| Endosulfan I | ND | 38 | 38 | ug/Kg | 03/06/15 | PS | SW8081B | |
| Endosulfan II | ND | 38 | 38 | ug/Kg | 03/06/15 | PS | SW8081B | |
| Endosulfan sulfate | ND | 38 | 38 | ug/Kg | 03/06/15 | PS | SW8081B | |
| Endrin | ND | 14 | 14 | ug/Kg | 03/06/15 | PS | SW8081B | |
| Endrin aldehyde | ND | 38 | 38 | ug/Kg | 03/06/15 | PS | SW8081B | |
| Endrin ketone | ND | 38 | 38 | ug/Kg | 03/06/15 | PS | SW8081B | |
| g-BHC | ND | 7.6 | 7.6 | ug/Kg | 03/06/15 | PS | SW8081B | |
| g-Chlordane | 22 | 19 | 19 | ug/Kg | 03/06/15 | PS | SW8081B | |
| Heptachlor | ND | 38 | 38 | ug/Kg | 03/06/15 | PS | SW8081B | |
| Heptachlor epoxide | ND | 38 | 38 | ug/Kg | 03/06/15 | PS | SW8081B | |
| Methoxychlor | ND | 190 | 190 | ug/Kg | 03/06/15 | PS | SW8081B | |
| Toxaphene | ND | 600 | 600 | ug/Kg | 03/06/15 | PS | SW8081B | |
| **QA/QC Surrogates** | | | | | | | | |
| % DCBP | 182 | | | % | 03/06/15 | PS | 30 - 150 % | 3 |
| % TCMX | 80 | | | % | 03/06/15 | PS | 30 - 150 % | |
| **TCLP Herbicides** | | | | | | | | |
| 2,4,5-TP (Silvex) | ND | 4.2 | | ug/L | 03/09/15 | JRB | SW8151A | |
| 2,4-D | ND | 4.2 | | ug/L | 03/09/15 | JRB | SW8151A | |
| **QA/QC Surrogates** | | | | | | | | |
| % DCAA | 42 | | | % | 03/09/15 | JRB | 30 - 150 % | |
| **TCLP Pesticides** | | | | | | | | |
| 4,4' -DDD | ND | 1.0 | | ug/L | 03/06/15 | CE | SW8081B | |
| 4,4' -DDE | ND | 1.0 | | ug/L | 03/06/15 | CE | SW8081B | |
| 4,4' -DDT | ND | 1.0 | | ug/L | 03/06/15 | CE | SW8081B | |
| a-BHC | ND | 0.50 | | ug/L | 03/06/15 | CE | SW8081B | |
| Alachlor | ND | 0.50 | | ug/L | 03/06/15 | CE | SW8081B | 1 |
| Aldrin | ND | 0.50 | | ug/L | 03/06/15 | CE | SW8081B | |
| b-BHC | ND | 0.50 | | ug/L | 03/06/15 | CE | SW8081B | |
| Chlordane | ND | 5.0 | | ug/L | 03/06/15 | CE | SW8081B | |
| d-BHC | ND | 0.50 | | ug/L | 03/06/15 | CE | SW8081B | |
| Dieldrin | ND | 1.0 | | ug/L | 03/06/15 | CE | SW8081B | |
| Endosulfan I | ND | 0.50 | | ug/L | 03/06/15 | CE | SW8081B | |
| Endosulfan II | ND | 1.0 | | ug/L | 03/06/15 | CE | SW8081B | |
| Endosulfan Sulfate | ND | 1.0 | | ug/L | 03/06/15 | CE | SW8081B | |
| Endrin | ND | 1.0 | | ug/L | 03/06/15 | CE | SW8081B | |
| Endrin Aldehyde | ND | 1.0 | | ug/L | 03/06/15 | CE | SW8081B | |
| g-BHC (Lindane) | ND | 0.50 | | ug/L | 03/06/15 | CE | SW8081B | |
| Heptachlor | ND | 0.50 | | ug/L | 03/06/15 | CE | SW8081B | |
| Heptachlor epoxide | ND | 0.50 | | ug/L | 03/06/15 | CE | SW8081B | |
| Methoxychlor | ND | 0.50 | | ug/L | 03/06/15 | CE | SW8081B | |
| Toxaphene | ND | 20 | | ug/L | 03/06/15 | CE | SW8081B | |
| **QA/QC Surrogates** | | | | | | | | |

Project ID: 109 MARBLEDALE RD TUCKAHOE NY
Client ID: TB-4 (0-10)

Phoenix I.D.: BH79490

| Parameter | Result | RL/ PQL | LOD/ MDL | Units | Date/Time | By | Reference | |
|---|---|---|---|---|---|---|---|---|
| %DCBP (Surrogate Rec) | 60 | | | % | 03/06/15 | CE | 30 - 150 % | |
| %TCMX (Surrogate Rec) | 68 | | | % | 03/06/15 | CE | 30 - 150 % | |
| **Extractable TPH C9-C44** | | | | | | | | |
| TPH to C44 | 1300 | 380 | | mg/Kg | 03/06/15 | JRB | SW8015D MOD | |
| **QA/QC Surrogates** | | | | | | | | |
| % Chlorobenzene (surrogate) | 56 | | | % | 03/06/15 | JRB | 60 - 120 % | 3 |
| % Pentacosane (surrogate) | 71 | | | % | 03/06/15 | JRB | 50 - 150 % | |
| **Gasoline Range Organics (C6-C10)** | ND | 21 | | mg/Kg | 03/07/15 | JRB | SW8015D GRO | |
| **Volatiles (TCL)** | | | | | | | | |
| 1,1,1-Trichloroethane | ND | 8.3 | | ug/kg | 03/05/15 | JLI | SW8260C | |
| 1,1,2,2-Tetrachloroethane | ND | 8.3 | | ug/kg | 03/05/15 | JLI | SW8260C | |
| 1,1,2-Trichloroethane | ND | 8.3 | | ug/kg | 03/05/15 | JLI | SW8260C | |
| 1,1-Dichloroethane | ND | 8.3 | | ug/kg | 03/05/15 | JLI | SW8260C | |
| 1,1-Dichloroethene | ND | 8.3 | | ug/kg | 03/05/15 | JLI | SW8260C | |
| 1,2,3-Trichlorobenzene | ND | 290 | | ug/kg | 03/05/15 | JLI | SW8260C | |
| 1,2,4-Trichlorobenzene | ND | 290 | | ug/kg | 03/05/15 | JLI | SW8260C | |
| 1,2-Dibromo-3-chloropropane | ND | 80 | | ug/kg | 03/05/15 | JLI | SW8260C | |
| 1,2-Dibromoethane | ND | 7.0 | | ug/kg | 03/05/15 | JLI | SW8260C | |
| 1,2-Dichlorobenzene | ND | 290 | | ug/kg | 03/05/15 | JLI | SW8260C | |
| 1,2-Dichloroethane | 11 | 8.3 | | ug/kg | 03/05/15 | JLI | SW8260C | |
| 1,2-Dichloropropane | ND | 8.3 | | ug/kg | 03/05/15 | JLI | SW8260C | |
| 1,3-Dichlorobenzene | ND | 290 | | ug/kg | 03/05/15 | JLI | SW8260C | |
| 1,4-Dichlorobenzene | ND | 290 | | ug/kg | 03/05/15 | JLI | SW8260C | |
| 2-Hexanone | ND | 42 | | ug/kg | 03/05/15 | JLI | SW8260C | |
| 4-Methyl-2-pentanone | ND | 42 | | ug/kg | 03/05/15 | JLI | SW8260C | |
| Acetone | 100 | 83 | | ug/kg | 03/05/15 | JLI | SW8260C | |
| Benzene | 49 | 8.3 | | ug/kg | 03/05/15 | JLI | SW8260C | |
| Bromochloromethane | ND | 8.3 | | ug/kg | 03/05/15 | JLI | SW8260C | |
| Bromodichloromethane | ND | 8.3 | | ug/kg | 03/05/15 | JLI | SW8260C | |
| Bromoform | ND | 8.3 | | ug/kg | 03/05/15 | JLI | SW8260C | |
| Bromomethane | ND | 8.3 | | ug/kg | 03/05/15 | JLI | SW8260C | |
| Carbon Disulfide | ND | 8.3 | | ug/kg | 03/05/15 | JLI | SW8260C | |
| Carbon tetrachloride | ND | 8.3 | | ug/kg | 03/05/15 | JLI | SW8260C | |
| Chlorobenzene | ND | 8.3 | | ug/kg | 03/05/15 | JLI | SW8260C | |
| Chloroethane | ND | 8.3 | | ug/kg | 03/05/15 | JLI | SW8260C | |
| Chloroform | 13 | 8.3 | | ug/kg | 03/05/15 | JLI | SW8260C | |
| Chloromethane | ND | 8.3 | | ug/kg | 03/05/15 | JLI | SW8260C | |
| cis-1,2-Dichloroethene | 14 | 8.3 | | ug/kg | 03/05/15 | JLI | SW8260C | |
| cis-1,3-Dichloropropene | ND | 8.3 | | ug/kg | 03/05/15 | JLI | SW8260C | |
| Cyclohexane | ND | 8.3 | | ug/kg | 03/05/15 | JLI | SW8260C | |
| Dibromochloromethane | ND | 8.3 | | ug/kg | 03/05/15 | JLI | SW8260C | |
| Dichlorodifluoromethane | ND | 8.3 | | ug/kg | 03/05/15 | JLI | SW8260C | |
| Ethylbenzene | ND | 8.3 | | ug/kg | 03/05/15 | JLI | SW8260C | |
| Isopropylbenzene | ND | 290 | | ug/kg | 03/05/15 | JLI | SW8260C | |
| m&p-Xylene | ND | 8.3 | | ug/kg | 03/05/15 | JLI | SW8260C | |
| Methyl ethyl ketone | ND | 50 | | ug/kg | 03/05/15 | JLI | SW8260C | |
| Methyl t-butyl ether (MTBE) | ND | 17 | | ug/kg | 03/05/15 | JLI | SW8260C | |
| Methylacetate | ND | 6.7 | | ug/kg | 03/05/15 | JLI | SW8260C | |

Project ID: 109 MARBLEDALE RD TUCKAHOE NY
Client ID: TB-4 (0-10)

Phoenix I.D.: BH79490

| Parameter | Result | RL/ PQL | LOD/ MDL | Units | Date/Time | By | Reference | |
|---|---|---|---|---|---|---|---|---|
| Methylcyclohexane | 9.9 | 8.3 | | ug/kg | 03/05/15 | JLI | SW8260C | |
| Methylene chloride | ND | 8.3 | | ug/kg | 03/05/15 | JLI | SW8260C | |
| o-Xylene | ND | 8.3 | | ug/kg | 03/05/15 | JLI | SW8260C | |
| Styrene | ND | 8.3 | | ug/kg | 03/05/15 | JLI | SW8260C | |
| Tetrachloroethene | ND | 8.3 | | ug/kg | 03/05/15 | JLI | SW8260C | |
| Toluene | 12 | 8.3 | | ug/kg | 03/05/15 | JLI | SW8260C | |
| Total Xylenes | ND | 8.3 | | ug/kg | 03/05/15 | JLI | SW8260C | |
| trans-1,2-Dichloroethene | ND | 8.3 | | ug/kg | 03/05/15 | JLI | SW8260C | |
| trans-1,3-Dichloropropene | ND | 8.3 | | ug/kg | 03/05/15 | JLI | SW8260C | |
| Trichloroethene | ND | 8.3 | | ug/kg | 03/05/15 | JLI | SW8260C | |
| Trichlorofluoromethane | ND | 8.3 | | ug/kg | 03/05/15 | JLI | SW8260C | |
| Trichlorotrifluoroethane | ND | 8.3 | | ug/kg | 03/05/15 | JLI | SW8260C | |
| Vinyl chloride | ND | 8.3 | | ug/kg | 03/05/15 | JLI | SW8260C | |
| **QA/QC Surrogates** | | | | | | | | |
| % 1,2-dichlorobenzene-d4 | 97 | | | % | 03/05/15 | JLI | 70 - 130 % | |
| % Bromofluorobenzene | 104 | | | % | 03/05/15 | JLI | 70 - 130 % | |
| % Dibromofluoromethane | 105 | | | % | 03/05/15 | JLI | 70 - 130 % | |
| % Toluene-d8 | 89 | | | % | 03/05/15 | JLI | 70 - 130 % | |
| Volatile Library Search Top 10 | Completed | | | | 03/05/15 | JLI | | |
| **Semivolatiles** | | | | | | | | |
| 1,1-Biphenyl | ND | 1100 | | ug/Kg | 03/06/15 | DD | SW8270D | |
| 1,2,4,5-Tetrachlorobenzene | ND | 1100 | | ug/Kg | 03/06/15 | DD | SW8270D | |
| 2,3,4,6-tetrachlorophenol | ND | 1100 | | ug/Kg | 03/06/15 | DD | SW8270D | |
| 2,4,5-Trichlorophenol | ND | 1100 | | ug/Kg | 03/06/15 | DD | SW8270D | |
| 2,4,6-Trichlorophenol | ND | 1100 | | ug/Kg | 03/06/15 | DD | SW8270D | |
| 2,4-Dichlorophenol | ND | 1100 | | ug/Kg | 03/06/15 | DD | SW8270D | |
| 2,4-Dimethylphenol | ND | 1100 | | ug/Kg | 03/06/15 | DD | SW8270D | |
| 2,4-Dinitrophenol | ND | 2500 | | ug/Kg | 03/06/15 | DD | SW8270D | |
| 2,4-Dinitrotoluene | ND | 700 | | ug/Kg | 03/06/15 | DD | SW8270D | |
| 2,6-Dinitrotoluene | ND | 700 | | ug/Kg | 03/06/15 | DD | SW8270D | |
| 2-Chloronaphthalene | ND | 1100 | | ug/Kg | 03/06/15 | DD | SW8270D | |
| 2-Chlorophenol | ND | 1100 | | ug/Kg | 03/06/15 | DD | SW8270D | |
| 2-Methylnaphthalene | ND | 1100 | | ug/Kg | 03/06/15 | DD | SW8270D | |
| 2-Methylphenol (o-cresol) | ND | 1100 | | ug/Kg | 03/06/15 | DD | SW8270D | |
| 2-Nitroaniline | ND | 2500 | | ug/Kg | 03/06/15 | DD | SW8270D | |
| 2-Nitrophenol | ND | 1100 | | ug/Kg | 03/06/15 | DD | SW8270D | |
| 3&4-Methylphenol (m&p-cresol) | ND | 1600 | | ug/Kg | 03/06/15 | DD | SW8270D | 1 |
| 3,3'-Dichlorobenzidine | ND | 1000 | | ug/Kg | 03/06/15 | DD | SW8270D | |
| 3-Nitroaniline | ND | 2500 | | ug/Kg | 03/06/15 | DD | SW8270D | |
| 4,6-Dinitro-2-methylphenol | ND | 4500 | | ug/Kg | 03/06/15 | DD | SW8270D | |
| 4-Bromophenyl phenyl ether | ND | 1600 | | ug/Kg | 03/06/15 | DD | SW8270D | |
| 4-Chloro-3-methylphenol | ND | 1100 | | ug/Kg | 03/06/15 | DD | SW8270D | |
| 4-Chloroaniline | ND | 1100 | | ug/Kg | 03/06/15 | DD | SW8270D | |
| 4-Chlorophenyl phenyl ether | ND | 1100 | | ug/Kg | 03/06/15 | DD | SW8270D | |
| 4-Nitroaniline | ND | 2500 | | ug/Kg | 03/06/15 | DD | SW8270D | |
| 4-Nitrophenol | ND | 4500 | | ug/Kg | 03/06/15 | DD | SW8270D | |
| Acenaphthene | ND | 1100 | | ug/Kg | 03/06/15 | DD | SW8270D | |
| Acenaphthylene | ND | 1100 | | ug/Kg | 03/06/15 | DD | SW8270D | |

Project ID: 109 MARBLEDALE RD TUCKAHOE NY
Client ID: TB-4 (0-10)

Phoenix I.D.: BH79490

| Parameter | Result | RL/ PQL | LOD/ MDL | Units | Date/Time | By | Reference | |
|---|---|---|---|---|---|---|---|---|
| Acetophenone | ND | 1100 | | ug/Kg | 03/06/15 | DD | SW8270D | |
| Anthracene | 4600 | 1100 | | ug/Kg | 03/06/15 | DD | SW8270D | |
| Atrazine | ND | 1100 | | ug/Kg | 03/06/15 | DD | SW8270D | |
| Benz(a)anthracene | 8000 | 1100 | | ug/Kg | 03/06/15 | DD | SW8270D | |
| Benzaldehyde | ND | 1100 | | ug/Kg | 03/06/15 | DD | SW8270D | |
| Benzo(a)pyrene | 6500 | 1100 | | ug/Kg | 03/06/15 | DD | SW8270D | |
| Benzo(b)fluoranthene | 8400 | 1100 | | ug/Kg | 03/06/15 | DD | SW8270D | |
| Benzo(ghi)perylene | 1800 | 1100 | | ug/Kg | 03/06/15 | DD | SW8270D | |
| Benzo(k)fluoranthene | 3300 | 1100 | | ug/Kg | 03/06/15 | DD | SW8270D | |
| Benzyl butyl phthalate | ND | 1100 | | ug/Kg | 03/06/15 | DD | SW8270D | |
| Bis(2-chloroethoxy)methane | ND | 1100 | | ug/Kg | 03/06/15 | DD | SW8270D | |
| Bis(2-chloroethyl)ether | ND | 1600 | | ug/Kg | 03/06/15 | DD | SW8270D | |
| Bis(2-chloroisopropyl)ether | ND | 1100 | | ug/Kg | 03/06/15 | DD | SW8270D | 1 |
| Bis(2-ethylhexyl)phthalate | ND | 1100 | | ug/Kg | 03/06/15 | DD | SW8270D | |
| Caprolactam | ND | 1100 | | ug/Kg | 03/06/15 | DD | SW8270D | |
| Carbazole | ND | 4500 | | ug/Kg | 03/06/15 | DD | SW8270D | |
| Chrysene | 7600 | 1100 | | ug/Kg | 03/06/15 | DD | SW8270D | |
| Dibenz(a,h)anthracene | ND | 1100 | | ug/Kg | 03/06/15 | DD | SW8270D | |
| Dibenzofuran | ND | 1100 | | ug/Kg | 03/06/15 | DD | SW8270D | |
| Diethyl phthalate | ND | 1100 | | ug/Kg | 03/06/15 | DD | SW8270D | |
| Dimethylphthalate | ND | 1100 | | ug/Kg | 03/06/15 | DD | SW8270D | |
| Di-n-butylphthalate | ND | 1100 | | ug/Kg | 03/06/15 | DD | SW8270D | |
| Di-n-octylphthalate | ND | 1100 | | ug/Kg | 03/06/15 | DD | SW8270D | |
| Fluoranthene | 11000 | 1100 | | ug/Kg | 03/06/15 | DD | SW8270D | |
| Fluorene | 1600 | 1100 | | ug/Kg | 03/06/15 | DD | SW8270D | |
| Hexachlorobenzene | ND | 1100 | | ug/Kg | 03/06/15 | DD | SW8270D | |
| Hexachlorobutadiene | ND | 1100 | | ug/Kg | 03/06/15 | DD | SW8270D | |
| Hexachlorocyclopentadiene | ND | 1100 | | ug/Kg | 03/06/15 | DD | SW8270D | |
| Hexachloroethane | ND | 1100 | | ug/Kg | 03/06/15 | DD | SW8270D | |
| Indeno(1,2,3-cd)pyrene | 2000 | 1100 | | ug/Kg | 03/06/15 | DD | SW8270D | |
| Isophorone | ND | 1100 | | ug/Kg | 03/06/15 | DD | SW8270D | |
| Naphthalene | ND | 1100 | | ug/Kg | 03/06/15 | DD | SW8270D | |
| Nitrobenzene | ND | 1100 | | ug/Kg | 03/06/15 | DD | SW8270D | |
| N-Nitrosodimethylamine | ND | 700 | | ug/Kg | 03/06/15 | DD | SW8270D | |
| N-Nitrosodi-n-propylamine | ND | 1100 | | ug/Kg | 03/06/15 | DD | SW8270D | |
| N-Nitrosodiphenylamine | ND | 1600 | | ug/Kg | 03/06/15 | DD | SW8270D | |
| Pentachlorophenol | ND | 800 | | ug/Kg | 03/06/15 | DD | SW8270D | |
| Phenanthrene | 11000 | 1100 | | ug/Kg | 03/06/15 | DD | SW8270D | |
| Phenol | ND | 1100 | | ug/Kg | 03/06/15 | DD | SW8270D | |
| Pyrene | 8300 | 1100 | | ug/Kg | 03/06/15 | DD | SW8270D | |
| **QA/QC Surrogates** | | | | | | | | |
| % 2,4,6-Tribromophenol | 90 | | | % | 03/06/15 | DD | 30 - 130 % | |
| % 2-Fluorobiphenyl | 65 | | | % | 03/06/15 | DD | 30 - 130 % | |
| % 2-Fluorophenol | 65 | | | % | 03/06/15 | DD | 30 - 130 % | |
| % Nitrobenzene-d5 | 68 | | | % | 03/06/15 | DD | 30 - 130 % | |
| % Phenol-d5 | 68 | | | % | 03/06/15 | DD | 30 - 130 % | |
| % Terphenyl-d14 | 52 | | | % | 03/06/15 | DD | 30 - 130 % | |

## TCLP Acid/Base-Neutral

| | | | | | | | |
|---|---|---|---|---|---|---|---|
| 1,4-Dichlorobenzene | ND | 83 | | ug/L | 03/06/15 | DD | SW8270D |

Project ID: 109 MARBLEDALE RD TUCKAHOE NY
Client ID: TB-4 (0-10)

Phoenix I.D.: BH79490

| Parameter | Result | RL/ PQL | LOD/ MDL | Units | Date/Time | By | Reference |
|---|---|---|---|---|---|---|---|
| 2,4,5-Trichlorophenol | ND | 83 | | ug/L | 03/06/15 | DD | SW8270D |
| 2,4,6-Trichlorophenol | ND | 83 | | ug/L | 03/06/15 | DD | SW8270D |
| 2,4-Dinitrotoluene | ND | 83 | | ug/L | 03/06/15 | DD | SW8270D |
| 2-Methylphenol (o-cresol) | ND | 83 | | ug/L | 03/06/15 | DD | SW8270D |
| 3&4-Methylphenol (m&p-Cresol) | ND | 83 | | ug/L | 03/06/15 | DD | SW8270D |
| Hexachlorobenzene | ND | 83 | | ug/L | 03/06/15 | DD | SW8270D |
| Hexachlorobutadiene | ND | 83 | | ug/L | 03/06/15 | DD | SW8270D |
| Hexachloroethane | ND | 83 | | ug/L | 03/06/15 | DD | SW8270D |
| Nitrobenzene | ND | 83 | | ug/L | 03/06/15 | DD | SW8270D |
| Pentachlorophenol | ND | 83 | | ug/L | 03/06/15 | DD | SW8270D |
| Pyridine | ND | 83 | | ug/L | 03/06/15 | DD | SW8270D |
| **QA/QC Surrogates** | | | | | | | |
| % 2,4,6-Tribromophenol | 95 | | | % | 03/06/15 | DD | 15 - 110 % |
| % 2-Fluorobiphenyl | 74 | | | % | 03/06/15 | DD | 30 - 130 % |
| % 2-Fluorophenol | 59 | | | % | 03/06/15 | DD | 15 - 110 % |
| % Nitrobenzene-d5 | 88 | | | % | 03/06/15 | DD | 30 - 130 % |
| % Phenol-d5 | 46 | | | % | 03/06/15 | DD | 15 - 110 % |
| % Terphenyl-d14 | 84 | | | % | 03/06/15 | DD | 30 - 130 % |
| SVOA Library Search Top 15 | Completed | | | | 03/09/15 | DD | |

Project ID: 109 MARBLEDALE RD TUCKAHOE NY
Client ID: TB-4 (0-10)

Phoenix I.D.: BH79490

| Parameter | Result | RL/ PQL | LOD/ MDL | Units | Date/Time | By | Reference |
|---|---|---|---|---|---|---|---|

1 = This parameter is not certified by NY NELAC for this matrix. NY NELAC does not offer certification for all parameters at this time.
3 = This parameter exceeds laboratory specified limits.

**RL/PQL=Reporting/Practical Quantitation Level (Equivalent to NELAC LOQ, Limit of Quanitation) ND=Not Detected**
**BRL=Below Reporting Level LOD=Limit of Detection MDL=Method Detection Limit**

## Comments:

Corrosivity is based solely on the pH analysis performed above.

Please be advised that the NY 375 soil criteria for chromium are based on hexavalent chromium and trivalent chromium.

Ignitability is based solely on the results of the closed cup flashpoint analysis performed above. Passed is >140 degree F.

The regulatory hold time for pH is immediately. This pH was performed in the laboratory and may be considered outside of hold-time.

The reactivity, reported above, is based only on the EPA Interim Guidance for Reactive Cyanide and Reactive Sulfide. This method is no longer listed in the current version of SW-846.

Hexavalent Chromium:
This sample is in a reducing state.

Pesticide Comment:
Due to a matrix interference and/or the presence of a large amount of non-target material in the sample, an elevated RL was reported.

Semi-Volatile Comment:
Due to a matrix interference and/or the presence of a large amount of non-target material in the sample, a dilution was required resulting in an elevated RL for the semivolatile analysis.

Volatile Comment:
There was a suppression of the last internal standard in the low level analysis, all affected compounds are reported from the methanol preserved high level analysis which did not exhibit this interference.

All soils, solids and sludges are reported on a dry weight basis unless otherwise noted in the sample comments.

If there are any questions regarding this data, please call Phoenix Client Services at extension 200.
This report must not be reproduced except in full as defined by the attached chain of custody.

**Phyllis Shiller, Laboratory Director**
**March 16, 2015**
**Reviewed and Released by: Phyllis Shiller, Laboratory Director**

1E
VOLATILE ORGANICS ANALYSIS DATA SHEET
TENTATIVELY IDENTIFIED COMPOUNDS

CLIENT ID

TB-4 (0-10)

Lab Name: Phoenix Environmental Labs  Client: HESNY-TUCK

Lab Code: Phoenix  Case No.:  SAS No.:  SDG No.: GBH79490

Matrix:(soil/water) SOIL  Lab Sample ID: BH79490

Sample wt/vol: 3.5 (g/mL) g  Lab File ID: 0304M52.D

Level: (low/med) ENL  Date Received: 03/04/15

% Moisture: not dec. 14  Date Analyzed: 03/05/15

GC Column: rtx-vms  ID: 0.18 (mm)  Dilution Factor: 1

Soil Extract Volume: 5000 (uL)  Soil Aliquot Vol (uL): 5000

Number TICs found: 8  CONCENTRATION UNITS: (ug/L or ug/KG) ug/Kg

| CAS NUMBER | COMPOUND NAME | RT | EST. CONC. | Q |
|---|---|---|---|---|
| 000594-82-1 | Butane, 2,2,3,3-tetramethyl- | 3.239 | 57 | JN |
| 000565-75-3 | Pentane, 2,3,4-trimethyl- | 3.997 | 52 | JN |
| 000560-21-4 | Pentane, 2,3,3-trimethyl- | 4.091 | 65 | JN |
| | unknown | 7.308 | 73 | JN |
| | unknown | 7.543 | 97 | JN |
| | unknown | 7.773 | 140 | JN |
| | unknown | 8.527 | 60 | JN |
| | unknown | 8.893 | 58 | JN |

1F
SEMIVOLATILE ORGANICS ANALYSIS DATA SHEET
TENTATIVELY IDENTIFIED COMPOUNDS

CLIENT ID
TB-4 (0-10)

Lab Name: Phoenix Environmental Labs  Client: HESNY-TUCK

Lab Code: Phoenix  Case No.:  SAS No.:  SDG No.: GBH79490

Matrix:(soil/water) SOIL  Lab Sample ID: BH79490

Sample wt/vol: 7.4299998 (g/mL) g  Lab File ID: 0306_19.D

Level: (low/med) Low  Date Received: 03/04/15

% Moisture: not dec. 14 decanted:(Y/N) NA  Date Extracted: 03/06/15

GPC Cleanup (Y/N): N  pH: NA  Date Analyzed: 3/6/2015

Conc. Extract Volume: 1000 (uL)  Dilution Factor 2

Injection Volume: 2 (uL)

Number TICs found: 7  CONCENTRATION UNITS: (ug/L or ug/KG) ug/Kg

| CAS NUMBER | COMPOUND NAME | RT | EST. CONC. | Q |
|---|---|---|---|---|
| 000123-42-2 | 2-Pentanone, 4-hydroxy-4-methyl- | 3.310 | 3400 | JNA |
| 000832-64-4 | Phenanthrene, 4-methyl- | 13.170 | 1600 | JN |
| | Unknown | 13.290 | 2500 | JN |
| | Unknown | 13.640 | 1500 | JN |
| 000243-17-4 | 11H-Benzo[b]fluorene | 15.170 | 1400 | JN |
| 000238-84-6 | 11H-Benzo[a]fluorene | 15.280 | 1300 | JN |
| 000192-97-2 | Benzo[e]pyrene | 19.190 | 3400 | JN |

PHOENIX

Environmental Laboratories, Inc.
587 East Middle Turnpike, P.O.Box 370, Manchester, CT 06045
Tel. (860) 645-1102 Fax (860) 645-0823

ACCREDITED IN ACCORDANCE WITH nelac
NY # 11301

# QA/QC Report

March 16, 2015

## QA/QC Data

SDG I.D.: GBH79490

| Parameter | Blank | Sample Result | Dup Result | Dup RPD | LCS % | LCSD % | LCS RPD | MS % | MSD % | MS RPD | % Rec Limits | % RPD Limits | |
|---|---|---|---|---|---|---|---|---|---|---|---|---|---|
| QA/QC Batch 300815, QC Sample No: BH78545 (BH79490) | | | | | | | | | | | | | |
| Mercury - Soil | BRL | 0.34 | 0.32 | 6.10 | 99.2 | | | 75.8 | 55.2 | 31.5 | 70 - 130 | 30 | m,r |

**Comment:**

LCSD not reported.

Additional Mercury criteria: LCS acceptance range for waters is 80-120% and for soils is 70-130%.

QA/QC Batch 300691, QC Sample No: BH78583 (BH79490)

### ICP Metals - TCLP Extraction

| | | | | | | | | | | | | | |
|---|---|---|---|---|---|---|---|---|---|---|---|---|---|
| Arsenic | BRL | <0.10 | <0.10 | NC | 101 | 105 | 3.9 | 99.1 | 99.1 | 0.0 | 75 - 125 | 20 | |
| Barium | BRL | <0.10 | <0.10 | NC | 98.5 | 98.1 | 0.4 | 101 | 100 | 1.0 | 75 - 125 | 20 | |
| Cadmium | BRL | <0.050 | <0.050 | NC | 96.2 | 97.4 | 1.2 | 96.0 | 95.8 | 0.2 | 75 - 125 | 20 | |
| Chromium | BRL | <0.10 | <0.10 | NC | 97.3 | 99.9 | 2.6 | 99.0 | 98.9 | 0.1 | 75 - 125 | 20 | |
| Copper | BRL | <0.10 | <0.10 | NC | 108 | 109 | 0.9 | 106 | 104 | 1.9 | 75 - 125 | 20 | |
| Lead | BRL | <0.10 | <0.10 | NC | 95.6 | 100 | 4.5 | 99.3 | 98.9 | 0.4 | 75 - 125 | 20 | |
| Nickel | BRL | <0.10 | <0.10 | NC | 97.5 | 98.8 | 1.3 | 98.9 | 98.6 | 0.3 | 75 - 125 | 20 | |
| Selenium | BRL | <0.10 | <0.10 | NC | 97.6 | 105 | 7.3 | 99.5 | 98.6 | 0.9 | 75 - 125 | 20 | |
| Silver | BRL | <0.10 | <0.10 | NC | 99.5 | 104 | 4.4 | 100 | 100 | 0.0 | 75 - 125 | 20 | |
| Zinc | BRL | <0.10 | <0.10 | NC | 97.3 | 98.4 | 1.1 | 97.9 | 97.6 | 0.3 | 75 - 125 | 20 | |

QA/QC Batch 300670, QC Sample No: BH79033 (BH79490)

### ICP Metals - Soil

| | | | | | | | | | | | | | |
|---|---|---|---|---|---|---|---|---|---|---|---|---|---|
| Aluminum | BRL | 1060 | 1130 | 6.40 | 95.3 | 99.2 | 4.0 | NC | NC | NC | 75 - 125 | 30 | |
| Antimony | BRL | <3.7 | <4.2 | NC | 96.6 | 106 | 9.3 | 87.2 | 85.8 | 1.6 | 75 - 125 | 30 | |
| Arsenic | BRL | 12.6 | 13.0 | 3.10 | 98.9 | 99.6 | 0.7 | 88.0 | 88.0 | 0.0 | 75 - 125 | 30 | |
| Barium | BRL | 74.3 | 74.3 | 0 | 110 | 119 | 7.9 | 98.2 | 90.5 | 8.2 | 75 - 125 | 30 | |
| Beryllium | BRL | <0.30 | <0.33 | NC | 103 | 106 | 2.9 | 95.4 | 94.3 | 1.2 | 75 - 125 | 30 | |
| Cadmium | BRL | <0.37 | <0.42 | NC | 89.8 | 92.3 | 2.7 | 90.5 | 89.7 | 0.9 | 75 - 125 | 30 | |
| Calcium | BRL | 1610 | 1620 | 0.60 | 101 | 102 | 1.0 | NC | NC | NC | 75 - 125 | 30 | |
| Chromium | BRL | 5.42 | 5.05 | 7.10 | 104 | 108 | 3.8 | 95.9 | 95.3 | 0.6 | 75 - 125 | 30 | |
| Cobalt | BRL | 3.30 | 2.81 | 16.0 | 93.8 | 96.4 | 2.7 | 98.4 | 97.2 | 1.2 | 75 - 125 | 30 | |
| Copper | BRL | 19.5 | 20.0 | 2.50 | 99.8 | 103 | 3.2 | 103 | 103 | 0.0 | 75 - 125 | 30 | |
| Iron | BRL | 8310 | 8540 | 2.70 | 84.7 | 90.3 | 6.4 | NC | NC | NC | 75 - 125 | 30 | |
| Lead | BRL | 11.5 | 13.8 | 18.2 | 94.2 | 98.1 | 4.1 | 93.2 | 91.6 | 1.7 | 75 - 125 | 30 | |
| Magnesium | BRL | 277 | 259 | 6.70 | 101 | 105 | 3.9 | >130 | 101 | NC | 75 - 125 | 30 | m |
| Manganese | BRL | 19.7 | 16.9 | 15.3 | 107 | 110 | 2.8 | 99.4 | 92.4 | 7.3 | 75 - 125 | 30 | |
| Nickel | BRL | 7.88 | 7.63 | 3.20 | 104 | 107 | 2.8 | 95.4 | 94.0 | 1.5 | 75 - 125 | 30 | |
| Potassium | BRL | 369 | 379 | 2.70 | 103 | 107 | 3.8 | 111 | 109 | 1.8 | 75 - 125 | 30 | |
| Selenium | BRL | <1.5 | <1.7 | NC | 91.2 | 91.9 | 0.8 | 75.7 | 75.0 | 0.9 | 75 - 125 | 30 | |
| Silver | BRL | <0.37 | <0.42 | NC | 102 | 104 | 1.9 | 92.7 | 91.7 | 1.1 | 75 - 125 | 30 | |
| Sodium | BRL | 178 | 182 | 2.20 | 118 | 119 | 0.8 | >130 | >130 | NC | 75 - 125 | 30 | m |
| Thallium | BRL | <3.3 | <3.7 | NC | 102 | 104 | 1.9 | 86.6 | 86.7 | 0.1 | 75 - 125 | 30 | |
| Vanadium | BRL | 13.7 | 12.2 | 11.6 | 116 | 119 | 2.6 | 96.8 | 96.7 | 0.1 | 75 - 125 | 30 | |
| Zinc | BRL | 2.96 | 3.60 | 19.5 | 90.1 | 93.3 | 3.5 | 89.9 | 88.0 | 2.1 | 75 - 125 | 30 | |

# QA/QC Data

SDG I.D.: GBH79490

| Parameter | Blank | Sample Result | Dup Result | Dup RPD | LCS % | LCSD % | LCS RPD | MS % | MSD % | MS RPD | % Rec Limits | % RPD Limits | |
|---|---|---|---|---|---|---|---|---|---|---|---|---|---|
| QA/QC Batch 300842, QC Sample No: BH79033 (BH79490) | | | | | | | | | | | | | |
| **Chromium, Hexavalent (SW3060 digestion) - Solid** | | | | | | | | | | | | | |
| Hexavalent Cr | BRL | <0.52 | <0.52 | NC | 98.3 | | | | | | 70 - 130 | 30 | |
| Insoluble Cr | | | | | 92.2 | | | 81.8 | | | 70 - 130 | 30 | |
| Soluble Cr | | | | | 96.2 | | | 37.3 | | | 70 - 130 | 30 | m |
| **Comment:** | | | | | | | | | | | | | |
| Soluble spike was analyzed twice with similar recoveries. | | | | | | | | | | | | | |
| QA/QC Batch 300818, QC Sample No: BH79579 (BH79490) | | | | | | | | | | | | | |
| Mercury - Water | BRL | <0.0002 | <0.0002 | NC | 106 | 98.0 | 7.8 | 106 | 99.2 | 6.6 | 70 - 130 | 20 | |
| **Comment:** | | | | | | | | | | | | | |
| Additional Mercury criteria: LCS acceptance range for waters is 80-120% and for soils is 70-130%. | | | | | | | | | | | | | |

m = This parameter is outside laboratory ms/msd specified recovery limits.
r = This parameter is outside laboratory rpd specified recovery limits.

PHOENIX

Environmental Laboratories, Inc.
587 East Middle Turnpike, P.O.Box 370, Manchester, CT 06045
Tel. (860) 645-1102 Fax (860) 645-0823

ACCREDITED IN ACCORDANCE WITH nelac
NY # 11301

# QA/QC Report

March 16, 2015

## QA/QC Data

SDG I.D.: GBH79490

| Parameter | Blank | Sample Result | Dup Result | Dup RPD | LCS % | LCSD % | LCS RPD | MS % | MSD % | MS RPD | % Rec Limits | % RPD Limits |
|---|---|---|---|---|---|---|---|---|---|---|---|---|
| QA/QC Batch 300799, QC Sample No: BH78389 (BH79490) | | | | | | | | | | | | |
| Total Cyanide (SW9010C Distillation) | BRL | 2.93 | 3.36 | 13.7 | 103 | | | 101 | | | 85 - 115 | 30 |
| QA/QC Batch 300817, QC Sample No: BH79277 (BH79490) | | | | | | | | | | | | |
| pH - Soil | | 10.93 | 10.89 | 0.40 | 99.0 | | | | | | 85 - 115 | 20 |
| QA/QC Batch 300809, QC Sample No: BH79277 (BH79490) | | | | | | | | | | | | |
| Reactivity Cyanide | BRL | <5.6 | <5.6 | NC | 94.6 | | | | | | 85 - 115 | 30 |
| QA/QC Batch 300814, QC Sample No: BH79363 (BH79490) | | | | | | | | | | | | |
| Flash Point | | >200 | >200 | NC | 101 | | | | | | 85 - 115 | 30 |

PHOENIX
Environmental Laboratories, Inc.
587 East Middle Turnpike, P.O.Box 370, Manchester, CT 06045
Tel. (860) 645-1102 Fax (860) 645-0823

ACCREDITED IN ACCORDANCE WITH nelac NY # 11301

# QA/QC Report

March 16, 2015

## QA/QC Data

SDG I.D.: GBH79490

| Parameter | Blank | LCS % | LCSD % | LCS RPD | MS % | MSD % | MS RPD | % Rec Limits | % RPD Limits | |
|---|---|---|---|---|---|---|---|---|---|---|
| QA/QC Batch 300248, QC Sample No: BH73653 (BH79490) | | | | | | | | | | |
| **TPH by GC - Solid** | | | | | | | | | | |
| Total Petroleum Hydrocarbon | ND | 66 | 78 | 16.7 | 48 | 45 | 6.5 | 60 - 120 | 30 | m |
| % Chlorobenzene (surrogate) | 41 | 43 | 48 | 11.0 | 47 | 49 | 4.2 | 60 - 120 | 30 | l,m |
| % Pentacosane (surrogate) | 47 | 52 | 63 | 19.1 | 117 | 94 | 21.8 | 50 - 150 | 30 | |
| QA/QC Batch 300646, QC Sample No: BH78545 (BH79490) | | | | | | | | | | |
| **Pesticides - Solid** | | | | | | | | | | |
| 4,4' -DDD | ND | 66 | 64 | 3.1 | | | | 40 - 140 | 30 | |
| 4,4' -DDE | ND | 62 | 61 | 1.6 | | | | 40 - 140 | 30 | |
| 4,4' -DDT | ND | 62 | 60 | 3.3 | | | | 40 - 140 | 30 | |
| a-BHC | ND | 60 | 59 | 1.7 | | | | 40 - 140 | 30 | |
| a-Chlordane | ND | 58 | 59 | 1.7 | | | | 40 - 140 | 30 | |
| Aldrin | ND | 59 | 58 | 1.7 | | | | 40 - 140 | 30 | |
| b-BHC | ND | 64 | 62 | 3.2 | | | | 40 - 140 | 30 | |
| Chlordane | ND | 59 | 59 | 0.0 | | | | 40 - 140 | 30 | |
| d-BHC | ND | 49 | 46 | 6.3 | | | | 40 - 140 | 30 | |
| Dieldrin | ND | 65 | 63 | 3.1 | | | | 40 - 140 | 30 | |
| Endosulfan I | ND | 58 | 57 | 1.7 | | | | 40 - 140 | 30 | |
| Endosulfan II | ND | 55 | 45 | 20.0 | | | | 40 - 140 | 30 | |
| Endosulfan sulfate | ND | 40 | 35 | 13.3 | | | | 40 - 140 | 30 | l |
| Endrin | ND | 62 | 60 | 3.3 | | | | 40 - 140 | 30 | |
| Endrin aldehyde | ND | 46 | 34 | 30.0 | | | | 40 - 140 | 30 | l |
| Endrin ketone | ND | 51 | 46 | 10.3 | | | | 40 - 140 | 30 | |
| g-BHC | ND | 62 | 61 | 1.6 | | | | 40 - 140 | 30 | |
| g-Chlordane | ND | 59 | 59 | 0.0 | | | | 40 - 140 | 30 | |
| Heptachlor | ND | 60 | 59 | 1.7 | | | | 40 - 140 | 30 | |
| Heptachlor epoxide | ND | 61 | 59 | 3.3 | | | | 40 - 140 | 30 | |
| Methoxychlor | ND | 60 | 56 | 6.9 | | | | 40 - 140 | 30 | |
| Toxaphene | ND | NA | NA | NC | | | | 40 - 140 | 30 | |
| % DCBP | 86 | 90 | 86 | 4.5 | | | | 30 - 150 | 30 | |
| % TCMX | 82 | 86 | 85 | 1.2 | | | | 30 - 150 | 30 | |

**Comment:**

This QC batch consists of a blank, LCS and LCSD.

| | | | | | | | | | | |
|---|---|---|---|---|---|---|---|---|---|---|
| QA/QC Batch 300653, QC Sample No: BH78913 (BH79490) | | | | | | | | | | |
| **Polychlorinated Biphenyls - Solid** | | | | | | | | | | |
| PCB-1016 | ND | 96 | 100 | 4.1 | 85 | 98 | 14.2 | 40 - 140 | 30 | |
| PCB-1221 | ND | | | | | | | 40 - 140 | 30 | |
| PCB-1232 | ND | | | | | | | 40 - 140 | 30 | |
| PCB-1242 | ND | | | | | | | 40 - 140 | 30 | |
| PCB-1248 | ND | | | | | | | 40 - 140 | 30 | |
| PCB-1254 | ND | | | | | | | 40 - 140 | 30 | |
| PCB-1260 | ND | 96 | 103 | 7.0 | 84 | 96 | 13.3 | 40 - 140 | 30 | |

# QA/QC Data

SDG I.D.: GBH79490

| Parameter | Blank | LCS % | LCSD % | LCS RPD | MS % | MSD % | MS RPD | % Rec Limits | % RPD Limits | |
|---|---|---|---|---|---|---|---|---|---|---|
| PCB-1262 | ND | | | | | | | 40 - 140 | 30 | |
| PCB-1268 | ND | | | | | | | 40 - 140 | 30 | |
| % DCBP (Surrogate Rec) | 92 | 117 | 125 | 6.6 | 87 | 100 | 13.9 | 30 - 150 | 30 | |
| % TCMX (Surrogate Rec) | 59 | 99 | 103 | 4.0 | 86 | 94 | 8.9 | 30 - 150 | 30 | |
| QA/QC Batch 300652, QC Sample No: BH78913 (BH79490) | | | | | | | | | | |
| **Semivolatiles - Solid** | | | | | | | | | | |
| 1,1-Biphenyl | ND | 78 | 78 | 0.0 | 60 | 60 | 0.0 | 30 - 130 | 30 | |
| 1,2,4,5-Tetrachlorobenzene | ND | 77 | 77 | 0.0 | 58 | 59 | 1.7 | 30 - 130 | 30 | |
| 2,3,4,6-tetrachlorophenol | ND | 100 | 97 | 3.0 | 73 | 77 | 5.3 | 30 - 130 | 30 | |
| 2,4,5-Trichlorophenol | ND | 85 | 87 | 2.3 | 65 | 68 | 4.5 | 30 - 130 | 30 | |
| 2,4,6-Trichlorophenol | ND | 86 | 87 | 1.2 | 64 | 66 | 3.1 | 30 - 130 | 30 | |
| 2,4-Dichlorophenol | ND | 81 | 83 | 2.4 | 61 | 61 | 0.0 | 30 - 130 | 30 | |
| 2,4-Dimethylphenol | ND | 78 | 78 | 0.0 | 63 | 64 | 1.6 | 30 - 130 | 30 | |
| 2,4-Dinitrophenol | ND | 33 | 31 | 6.3 | 90 | 70 | 25.0 | 30 - 130 | 30 | |
| 2,4-Dinitrotoluene | ND | 99 | 97 | 2.0 | 69 | 70 | 1.4 | 30 - 130 | 30 | |
| 2,6-Dinitrotoluene | ND | 91 | 90 | 1.1 | 64 | 65 | 1.6 | 30 - 130 | 30 | |
| 2-Chloronaphthalene | ND | 80 | 81 | 1.2 | 63 | 63 | 0.0 | 30 - 130 | 30 | |
| 2-Chlorophenol | ND | 78 | 78 | 0.0 | 58 | 59 | 1.7 | 30 - 130 | 30 | |
| 2-Methylnaphthalene | ND | 76 | 77 | 1.3 | 58 | 59 | 1.7 | 30 - 130 | 30 | |
| 2-Methylphenol (o-cresol) | ND | 75 | 75 | 0.0 | 60 | 58 | 3.4 | 30 - 130 | 30 | |
| 2-Nitroaniline | ND | 144 | 146 | 1.4 | 104 | 102 | 1.9 | 30 - 130 | 30 | l |
| 2-Nitrophenol | ND | 86 | 85 | 1.2 | 65 | 66 | 1.5 | 30 - 130 | 30 | |
| 3&4-Methylphenol (m&p-cresol) | ND | 77 | 77 | 0.0 | 57 | 57 | 0.0 | 30 - 130 | 30 | |
| 3,3'-Dichlorobenzidine | ND | 63 | 62 | 1.6 | 42 | 44 | 4.7 | 30 - 130 | 30 | |
| 3-Nitroaniline | ND | 77 | 74 | 4.0 | 56 | 55 | 1.8 | 30 - 130 | 30 | |
| 4,6-Dinitro-2-methylphenol | ND | 61 | 59 | 3.3 | 114 | 83 | 31.5 | 30 - 130 | 30 | r |
| 4-Bromophenyl phenyl ether | ND | 75 | 74 | 1.3 | 54 | 55 | 1.8 | 30 - 130 | 30 | |
| 4-Chloro-3-methylphenol | ND | 83 | 83 | 0.0 | 62 | 65 | 4.7 | 30 - 130 | 30 | |
| 4-Chloroaniline | ND | 45 | 46 | 2.2 | 27 | 29 | 7.1 | 30 - 130 | 30 | m |
| 4-Chlorophenyl phenyl ether | ND | 85 | 84 | 1.2 | 62 | 62 | 0.0 | 30 - 130 | 30 | |
| 4-Nitroaniline | ND | 93 | 92 | 1.1 | 70 | 70 | 0.0 | 30 - 130 | 30 | |
| 4-Nitrophenol | ND | 136 | 132 | 3.0 | 96 | 97 | 1.0 | 30 - 130 | 30 | l |
| Acenaphthene | ND | 85 | 85 | 0.0 | 64 | 64 | 0.0 | 30 - 130 | 30 | |
| Acenaphthylene | ND | 81 | 83 | 2.4 | 62 | 63 | 1.6 | 30 - 130 | 30 | |
| Acetophenone | ND | 81 | 82 | 1.2 | 61 | 62 | 1.6 | 30 - 130 | 30 | |
| Anthracene | ND | 87 | 89 | 2.3 | 68 | 68 | 0.0 | 30 - 130 | 30 | |
| Atrazine | ND | 95 | 93 | 2.1 | 73 | 70 | 4.2 | 30 - 130 | 30 | |
| Benz(a)anthracene | ND | 89 | 89 | 0.0 | 64 | 64 | 0.0 | 30 - 130 | 30 | |
| Benzaldehyde | ND | 133 | 134 | 0.7 | 148 | 148 | 0.0 | 30 - 130 | 30 | l,m |
| Benzo(a)pyrene | ND | 88 | 87 | 1.1 | 62 | 61 | 1.6 | 30 - 130 | 30 | |
| Benzo(b)fluoranthene | ND | 87 | 87 | 0.0 | 59 | 58 | 1.7 | 30 - 130 | 30 | |
| Benzo(ghi)perylene | ND | 80 | 81 | 1.2 | 61 | 65 | 6.3 | 30 - 130 | 30 | |
| Benzo(k)fluoranthene | ND | 88 | 88 | 0.0 | 66 | 65 | 1.5 | 30 - 130 | 30 | |
| Benzyl butyl phthalate | ND | 86 | 84 | 2.4 | 67 | 69 | 2.9 | 30 - 130 | 30 | |
| Bis(2-chloroethoxy)methane | ND | 81 | 82 | 1.2 | 60 | 61 | 1.7 | 30 - 130 | 30 | |
| Bis(2-chloroethyl)ether | ND | 63 | 62 | 1.6 | 51 | 53 | 3.8 | 30 - 130 | 30 | |
| Bis(2-chloroisopropyl)ether | ND | 71 | 71 | 0.0 | 52 | 52 | 0.0 | 30 - 130 | 30 | |
| Bis(2-ethylhexyl)phthalate | ND | 84 | 84 | 0.0 | 64 | 64 | 0.0 | 30 - 130 | 30 | |
| Caprolactam | ND | 86 | 84 | 2.4 | 57 | 58 | 1.7 | 30 - 130 | 30 | |
| Carbazole | ND | 110 | 112 | 1.8 | 85 | 82 | 3.6 | 30 - 130 | 30 | |
| Chrysene | ND | 93 | 92 | 1.1 | 67 | 65 | 3.0 | 30 - 130 | 30 | |
| Dibenz(a,h)anthracene | ND | 79 | 79 | 0.0 | 62 | 64 | 3.2 | 30 - 130 | 30 | |

# QA/QC Data

SDG I.D.: GBH79490

| Parameter | Blank | LCS % | LCSD % | LCS RPD | MS % | MSD % | MS RPD | % Rec Limits | % RPD Limits | |
|---|---|---|---|---|---|---|---|---|---|---|
| Dibenzofuran | ND | 86 | 86 | 0.0 | 64 | 64 | 0.0 | 30 - 130 | 30 | |
| Diethyl phthalate | ND | 95 | 93 | 2.1 | 67 | 67 | 0.0 | 30 - 130 | 30 | |
| Dimethylphthalate | ND | 89 | 87 | 2.3 | 64 | 64 | 0.0 | 30 - 130 | 30 | |
| Di-n-butylphthalate | ND | 91 | 92 | 1.1 | 66 | 63 | 4.7 | 30 - 130 | 30 | |
| Di-n-octylphthalate | ND | 86 | 86 | 0.0 | 57 | 58 | 1.7 | 30 - 130 | 30 | |
| Fluoranthene | ND | 96 | 96 | 0.0 | 71 | 67 | 5.8 | 30 - 130 | 30 | |
| Fluorene | ND | 90 | 89 | 1.1 | 67 | 68 | 1.5 | 30 - 130 | 30 | |
| Hexachlorobenzene | ND | 77 | 74 | 4.0 | 56 | 56 | 0.0 | 30 - 130 | 30 | |
| Hexachlorobutadiene | ND | 77 | 76 | 1.3 | 57 | 57 | 0.0 | 30 - 130 | 30 | |
| Hexachlorocyclopentadiene | ND | 72 | 74 | 2.7 | 33 | 21 | 44.4 | 30 - 130 | 30 | m,r |
| Hexachloroethane | ND | 67 | 67 | 0.0 | 47 | 46 | 2.2 | 30 - 130 | 30 | |
| Indeno(1,2,3-cd)pyrene | ND | 66 | 67 | 1.5 | 51 | 53 | 3.8 | 30 - 130 | 30 | |
| Isophorone | ND | 74 | 74 | 0.0 | 55 | 56 | 1.8 | 30 - 130 | 30 | |
| Naphthalene | ND | 78 | 78 | 0.0 | 59 | 60 | 1.7 | 30 - 130 | 30 | |
| Nitrobenzene | ND | 76 | 76 | 0.0 | 56 | 57 | 1.8 | 30 - 130 | 30 | |
| N-Nitrosodimethylamine | ND | 68 | 68 | 0.0 | 44 | 43 | 2.3 | 30 - 130 | 30 | |
| N-Nitrosodi-n-propylamine | ND | 76 | 78 | 2.6 | 58 | 57 | 1.7 | 30 - 130 | 30 | |
| N-Nitrosodiphenylamine | ND | 98 | 94 | 4.2 | 69 | 71 | 2.9 | 30 - 130 | 30 | |
| Pentachlorophenol | ND | 86 | 88 | 2.3 | 77 | 72 | 6.7 | 30 - 130 | 30 | |
| Phenanthrene | ND | 87 | 85 | 2.3 | 63 | 62 | 1.6 | 30 - 130 | 30 | |
| Phenol | ND | 77 | 78 | 1.3 | 55 | 56 | 1.8 | 30 - 130 | 30 | |
| Pyrene | ND | 97 | 96 | 1.0 | 70 | 67 | 4.4 | 30 - 130 | 30 | |
| % 2,4,6-Tribromophenol | 57 | 79 | 76 | 3.9 | 60 | 61 | 1.7 | 30 - 130 | 30 | |
| % 2-Fluorobiphenyl | 49 | 76 | 77 | 1.3 | 56 | 56 | 0.0 | 30 - 130 | 30 | |
| % 2-Fluorophenol | 44 | 73 | 72 | 1.4 | 50 | 50 | 0.0 | 30 - 130 | 30 | |
| % Nitrobenzene-d5 | 46 | 71 | 70 | 1.4 | 50 | 51 | 2.0 | 30 - 130 | 30 | |
| % Phenol-d5 | 49 | 76 | 76 | 0.0 | 51 | 52 | 1.9 | 30 - 130 | 30 | |
| % Terphenyl-d14 | 58 | 96 | 96 | 0.0 | 69 | 66 | 4.4 | 30 - 130 | 30 | |

**Comment:**

Additional 8270 criteria: 20% of compounds can be outside of acceptance criteria as long as recovery is at least 10%. (Acid surrogates acceptance range for aqueous samples: 15-110%, for soils 30-130%)

QA/QC Batch 300991, QC Sample No: BH79102 (BH79490)

## Chlorinated Herbicides

| | | | | | | | | | | |
|---|---|---|---|---|---|---|---|---|---|---|
| 2,4,5-TP (Silvex) | ND | 80 | 77 | 3.8 | | | | 40 - 140 | 20 | |
| 2,4-D | ND | 107 | 95 | 11.9 | | | | 40 - 140 | 20 | |
| % DCAA (Surrogate Rec) | 34 | 63 | 63 | 0.0 | | | | 30 - 150 | 20 | |

QA/QC Batch 300927, QC Sample No: BH79102 (BH79490)

## Pesticides

| | | | | | | | | | | |
|---|---|---|---|---|---|---|---|---|---|---|
| 4,4' -DDD | ND | 82 | 101 | 20.8 | | | | 40 - 140 | 20 | r |
| 4,4' -DDE | ND | 68 | 83 | 19.9 | | | | 40 - 140 | 20 | |
| 4,4' -DDT | ND | 72 | 88 | 20.0 | | | | 40 - 140 | 20 | |
| a-BHC | ND | 76 | 89 | 15.8 | | | | 40 - 140 | 20 | |
| a-Chlordane | ND | 71 | 86 | 19.1 | | | | 40 - 140 | 20 | |
| Alachlor | ND | NA | NA | NC | | | | 40 - 140 | 20 | |
| Aldrin | ND | 65 | 76 | 15.6 | | | | 40 - 140 | 20 | |
| b-BHC | ND | 78 | 93 | 17.5 | | | | 40 - 140 | 20 | |
| Chlordane | ND | 70 | 84 | 18.2 | | | | 40 - 140 | 20 | |
| d-BHC | ND | 64 | 78 | 19.7 | | | | 40 - 140 | 20 | |
| Dieldrin | ND | 68 | 82 | 18.7 | | | | 40 - 140 | 20 | |
| Endosulfan I | ND | 73 | 88 | 18.6 | | | | 40 - 140 | 20 | |
| Endosulfan II | ND | 73 | 88 | 18.6 | | | | 40 - 140 | 20 | |
| Endosulfan sulfate | ND | 71 | 83 | 15.6 | | | | 40 - 140 | 20 | |

| Parameter | Blank | LCS % | LCSD % | LCS RPD | MS % | MSD % | MS RPD | % Rec Limits | % RPD Limits |
|---|---|---|---|---|---|---|---|---|---|
| Endrin | ND | 70 | 86 | 20.5 | | | | 40 - 140 | 20 |
| Endrin aldehyde | ND | 91 | 107 | 16.2 | | | | 40 - 140 | 20 |
| g-BHC | ND | 82 | 95 | 14.7 | | | | 40 - 140 | 20 |
| g-Chlordane | ND | 70 | 84 | 18.2 | | | | 40 - 140 | 20 |
| Heptachlor | ND | 69 | 81 | 16.0 | | | | 40 - 140 | 20 |
| Heptachlor epoxide | ND | 68 | 82 | 18.7 | | | | 40 - 140 | 20 |
| Methoxychlor | ND | 75 | 92 | 20.4 | | | | 40 - 140 | 20 |
| Toxaphene | ND | NA | NA | NC | | | | 40 - 140 | 20 |
| % DCBP | 55 | 49 | 64 | 26.5 | | | | 40 - 150 | 20 |
| % TCMX | 80 | 73 | 82 | 11.6 | | | | 40 - 150 | 20 |

**Comment:**

A LCS and LCS duplicate were performed instead of a MS and MSD. Alpha and gamma chlordane were spiked and analyzed instead of technical chlordane. Gamma chlordane recovery is reported as chlordane in the LCS and LCSD

QA/QC Batch 300926, QC Sample No: BH79102 (BH79490)

## Semivolatiles

| | | | | | | | | | |
|---|---|---|---|---|---|---|---|---|---|
| 1,4-Dichlorobenzene | ND | 65 | 65 | 0.0 | | | | 30 - 130 | 20 |
| 2,4,5-Trichlorophenol | ND | 97 | 102 | 5.0 | | | | 30 - 130 | 20 |
| 2,4,6-Trichlorophenol | ND | 100 | 101 | 1.0 | | | | 30 - 130 | 20 |
| 2,4-Dinitrotoluene | ND | 97 | 98 | 1.0 | | | | 30 - 130 | 20 |
| 2-Methylphenol (o-cresol) | ND | 80 | 83 | 3.7 | | | | 30 - 130 | 20 |
| 3&4-Methylphenol (m&p-cresol) | ND | 76 | 82 | 7.6 | | | | 30 - 130 | 20 |
| Hexachlorobenzene | ND | 93 | 89 | 4.4 | | | | 30 - 130 | 20 |
| Hexachlorobutadiene | ND | 69 | 70 | 1.4 | | | | 30 - 130 | 20 |
| Hexachloroethane | ND | 61 | 62 | 1.6 | | | | 30 - 130 | 20 |
| Nitrobenzene | ND | 87 | 90 | 3.4 | | | | 30 - 130 | 20 |
| Pentachlorophenol | ND | 102 | 101 | 1.0 | | | | 30 - 130 | 20 |
| Pyridine | ND | 40 | 39 | 2.5 | | | | 30 - 130 | 20 |
| % 2,4,6-Tribromophenol | 93 | 86 | 88 | 2.3 | | | | 15 - 110 | 20 |
| % 2-Fluorobiphenyl | 73 | 79 | 79 | 0.0 | | | | 30 - 130 | 20 |
| % 2-Fluorophenol | 59 | 64 | 64 | 0.0 | | | | 15 - 110 | 20 |
| % Nitrobenzene-d5 | 79 | 78 | 82 | 5.0 | | | | 30 - 130 | 20 |
| % Phenol-d5 | 51 | 51 | 53 | 3.8 | | | | 15 - 110 | 20 |
| % Terphenyl-d14 | 91 | 100 | 95 | 5.1 | | | | 30 - 130 | 20 |

**Comment:**

A LCS and LCS Duplicate were performed instead of a matrix spike and matrix spike duplicate.

Additional 8270 criteria: 20% of compounds can be outside of acceptance criteria as long as recovery is at least 10%. (Acid surrogates acceptance range for aqueous samples: 15-110%, for soils 30-130%)

QA/QC Batch 300886, QC Sample No: BH79488 (BH79490 (1X, 50X) )

## Volatiles (TCL) - Solid

| | | | | | | | | | |
|---|---|---|---|---|---|---|---|---|---|
| 1,1,1-Trichloroethane | ND | 113 | 110 | 2.7 | 96 | 97 | 1.0 | 70 - 130 | 30 |
| 1,1,2,2-Tetrachloroethane | ND | 125 | 120 | 4.1 | 99 | 99 | 0.0 | 70 - 130 | 30 |
| 1,1,2-Trichloroethane | ND | 113 | 111 | 1.8 | 96 | 96 | 0.0 | 70 - 130 | 30 |
| 1,1-Dichloroethane | ND | 128 | 123 | 4.0 | 111 | 114 | 2.7 | 70 - 130 | 30 |
| 1,1-Dichloroethene | ND | 116 | 109 | 6.2 | 83 | 83 | 0.0 | 70 - 130 | 30 |
| 1,2,3-Trichlorobenzene | ND | 90 | 82 | 9.3 | 78 | 78 | 0.0 | 70 - 130 | 30 |
| 1,2,4-Trichlorobenzene | ND | 86 | 80 | 7.2 | 79 | 76 | 3.9 | 70 - 130 | 30 |
| 1,2-Dibromo-3-chloropropane | ND | 113 | 111 | 1.8 | 86 | 85 | 1.2 | 70 - 130 | 30 |
| 1,2-Dibromoethane | ND | 119 | 116 | 2.6 | 98 | 99 | 1.0 | 70 - 130 | 30 |
| 1,2-Dichlorobenzene | ND | 95 | 88 | 7.7 | 83 | 82 | 1.2 | 70 - 130 | 30 |
| 1,2-Dichloroethane | ND | 110 | 107 | 2.8 | 94 | 94 | 0.0 | 70 - 130 | 30 |
| 1,2-Dichloropropane | ND | 123 | 118 | 4.1 | 106 | 107 | 0.9 | 70 - 130 | 30 |

# QA/QC Data

SDG I.D.: GBH79490

| Parameter | Blank | LCS % | LCSD % | LCS RPD | MS % | MSD % | MS RPD | % Rec Limits | % RPD Limits | |
|---|---|---|---|---|---|---|---|---|---|---|
| 1,3-Dichlorobenzene | ND | 94 | 87 | 7.7 | 84 | 80 | 4.9 | 70 - 130 | 30 | |
| 1,4-Dichlorobenzene | ND | 90 | 83 | 8.1 | 82 | 79 | 3.7 | 70 - 130 | 30 | |
| 2-Hexanone | ND | 99 | 98 | 1.0 | 82 | 84 | 2.4 | 70 - 130 | 30 | |
| 4-Methyl-2-pentanone | ND | 118 | 118 | 0.0 | 92 | 93 | 1.1 | 70 - 130 | 30 | |
| Acetone | ND | 91 | 96 | 5.3 | 50 | 68 | 30.5 | 70 - 130 | 30 | m |
| Benzene | ND | 120 | 115 | 4.3 | 104 | 103 | 1.0 | 70 - 130 | 30 | |
| Bromochloromethane | ND | 114 | 108 | 5.4 | 93 | 94 | 1.1 | 70 - 130 | 30 | |
| Bromodichloromethane | ND | 117 | 111 | 5.3 | 93 | 94 | 1.1 | 70 - 130 | 30 | |
| Bromoform | ND | 87 | 87 | 0.0 | 61 | 64 | 4.8 | 70 - 130 | 30 | m |
| Bromomethane | ND | 93 | 85 | 9.0 | 54 | 58 | 7.1 | 70 - 130 | 30 | m |
| Carbon Disulfide | ND | 132 | 127 | 3.9 | 85 | 86 | 1.2 | 70 - 130 | 30 | l |
| Carbon tetrachloride | ND | 112 | 107 | 4.6 | 90 | 89 | 1.1 | 70 - 130 | 30 | |
| Chlorobenzene | ND | 97 | 94 | 3.1 | 87 | 87 | 0.0 | 70 - 130 | 30 | |
| Chloroethane | ND | 119 | 111 | 7.0 | 25 | 24 | 4.1 | 70 - 130 | 30 | m |
| Chloroform | ND | 114 | 110 | 3.6 | 99 | 99 | 0.0 | 70 - 130 | 30 | |
| Chloromethane | ND | 117 | 113 | 3.5 | 106 | 107 | 0.9 | 70 - 130 | 30 | |
| cis-1,2-Dichloroethene | ND | 123 | 127 | 3.2 | 105 | 105 | 0.0 | 70 - 130 | 30 | |
| cis-1,3-Dichloropropene | ND | 127 | 123 | 3.2 | 104 | 104 | 0.0 | 70 - 130 | 30 | |
| Cyclohexane | ND | 113 | 109 | 3.6 | 112 | 113 | 0.9 | 70 - 130 | 30 | |
| Dibromochloromethane | ND | 101 | 99 | 2.0 | 76 | 79 | 3.9 | 70 - 130 | 30 | |
| Dichlorodifluoromethane | ND | 104 | 101 | 2.9 | 89 | 95 | 6.5 | 70 - 130 | 30 | |
| Ethylbenzene | ND | 102 | 98 | 4.0 | 90 | 89 | 1.1 | 70 - 130 | 30 | |
| Isopropylbenzene | ND | 109 | 101 | 7.6 | 93 | 93 | 0.0 | 70 - 130 | 30 | |
| m&p-Xylene | ND | 98 | 92 | 6.3 | 87 | 87 | 0.0 | 70 - 130 | 30 | |
| Methyl ethyl ketone | ND | 106 | 113 | 6.4 | 82 | 80 | 2.5 | 70 - 130 | 30 | |
| Methyl t-butyl ether (MTBE) | ND | 111 | 103 | 7.5 | 82 | 84 | 2.4 | 70 - 130 | 30 | |
| Methylacetate | ND | 130 | 130 | 0.0 | 166 | 162 | 2.4 | 70 - 130 | 30 | m |
| Methylcyclohexane | ND | 108 | 106 | 1.9 | 103 | 103 | 0.0 | 70 - 130 | 30 | |
| Methylene chloride | ND | 109 | 105 | 3.7 | 88 | 90 | 2.2 | 70 - 130 | 30 | |
| o-Xylene | ND | 103 | 100 | 3.0 | 91 | 91 | 0.0 | 70 - 130 | 30 | |
| Styrene | ND | 101 | 96 | 5.1 | 90 | 90 | 0.0 | 70 - 130 | 30 | |
| Tetrachloroethene | ND | 87 | 83 | 4.7 | 79 | 77 | 2.6 | 70 - 130 | 30 | |
| Toluene | ND | 115 | 110 | 4.4 | 99 | 100 | 1.0 | 70 - 130 | 30 | |
| trans-1,2-Dichloroethene | ND | 114 | 109 | 4.5 | 94 | 96 | 2.1 | 70 - 130 | 30 | |
| trans-1,3-Dichloropropene | ND | 122 | 120 | 1.7 | 97 | 96 | 1.0 | 70 - 130 | 30 | |
| Trichloroethene | ND | 99 | 98 | 1.0 | 87 | 88 | 1.1 | 70 - 130 | 30 | |
| Trichlorofluoromethane | ND | 104 | 101 | 2.9 | 19 | 18 | 5.4 | 70 - 130 | 30 | m |
| Trichlorotrifluoroethane | ND | 113 | 110 | 2.7 | 86 | 88 | 2.3 | 70 - 130 | 30 | |
| Vinyl chloride | ND | 116 | 112 | 3.5 | 121 | 123 | 1.6 | 70 - 130 | 30 | |
| % 1,2-dichlorobenzene-d4 | 94 | 103 | 99 | 4.0 | 101 | 102 | 1.0 | 70 - 130 | 30 | |
| % Bromofluorobenzene | 102 | 111 | 107 | 3.7 | 111 | 110 | 0.9 | 70 - 130 | 30 | |
| % Dibromofluoromethane | 93 | 94 | 92 | 2.2 | 92 | 94 | 2.2 | 70 - 130 | 30 | |
| % Toluene-d8 | 96 | 109 | 109 | 0.0 | 109 | 108 | 0.9 | 70 - 130 | 30 | |

**Comment:**

Additional 8260 criteria: 10% of LCS/LCSD compounds can be outside of acceptance criteria as long as recovery is 40-160%.

QA/QC Batch 301001, QC Sample No: BH79490 (BH79490)

## Gasoline Range Organics (C6C10) - Solid

| | | | | | | | | | | |
|---|---|---|---|---|---|---|---|---|---|---|
| Gasoline Range Organics (C6-C10) | ND | 83 | | | 48 | 45 | 6.5 | 60 - 120 | 30 | m |

l = This parameter is outside laboratory lcs/lcsd specified recovery limits.
m = This parameter is outside laboratory ms/msd specified recovery limits.
r = This parameter is outside laboratory rpd specified recovery limits.

# QA/QC Data

SDG I.D.: GBH79490

| Parameter | Blank | LCS % | LCSD % | LCS RPD | MS % | MSD % | MS RPD | % Rec Limits | % RPD Limits |
|---|---|---|---|---|---|---|---|---|---|

If there are any questions regarding this data, please call Phoenix Client Services at extension 200.

RPD - Relative Percent Difference
LCS - Laboratory Control Sample
LCSD - Laboratory Control Sample Duplicate
MS - Matrix Spike
MS Dup - Matrix Spike Duplicate
NC - No Criteria
Intf - Interference

Phyllis Shiller, Laboratory Director
March 16, 2015

# Sample Criteria Exceedences Report

## GBH79490 - HESNY-TUCK



Criteria: NJ: ISCC, NRC, RC; NY: 375

State: NJ

| SampNo | Acode | Phoenix Analyte | Criteria | Result | RL | Criteria | RL Criteria | Analysis Units |
|---|---|---|---|---|---|---|---|---|
| BH79490 | $8260_TCL_SM | Acetone | NY / 375-6.8 Volatiles / Unrestricted Use Soil | 100 | 83 | 50 | 50 | ug/kg |
| BH79490 | $8270_TCLR | Phenol | NY / 375-6.8 Semivolatiles / Unrestricted Use Soil | ND | 1100 | 330 | 330 | ug/Kg |
| BH79490 | $8270_TCLR | Bis(2-chloroethyl)ether | NJ / Soil Remediation Standard / Res. Direct Contact | ND | 1600 | 400 | 200 | ug/Kg |
| BH79490 | $8270_TCLR | 2-Methylphenol (o-cresol) | NY / 375-6.8 Semivolatiles / Unrestricted Use Soil | ND | 1100 | 330 | 330 | ug/Kg |
| BH79490 | $8270_TCLR | N-Nitrosodi-n-propylamine | NJ / Soil Remediation Standard / Non Res. Direct Contact | ND | 1100 | 300 | 200 | ug/Kg |
| BH79490 | $8270_TCLR | N-Nitrosodi-n-propylamine | NJ / Soil Remediation Standard / Res. Direct Contact | ND | 1100 | 200 | 200 | ug/Kg |
| BH79490 | $8270_TCLR | Hexachlorobenzene | NJ / Soil Remediation Standard / Non Res. Direct Contact | ND | 1100 | 1000 | 200 | ug/Kg |
| BH79490 | $8270_TCLR | Hexachlorobenzene | NJ / Soil Remediation Standard / Res. Direct Contact | ND | 1100 | 300 | 200 | ug/Kg |
| BH79490 | $8270_TCLR | Benz(a)anthracene | NJ / Soil Remediation Standard / Non Res. Direct Contact | 8000 | 1100 | 2000 | 200 | ug/Kg |
| BH79490 | $8270_TCLR | Benz(a)anthracene | NJ / Soil Remediation Standard / Res. Direct Contact | 8000 | 1100 | 600 | 200 | ug/Kg |
| BH79490 | $8270_TCLR | Benz(a)anthracene | NY / 375-6.8 Semivolatiles / Unrestricted Use Soil | 8000 | 1100 | 1000 | 1000 | ug/Kg |
| BH79490 | $8270_TCLR | Chrysene | NY / 375-6.8 Semivolatiles / Unrestricted Use Soil | 7600 | 1100 | 1000 | 1000 | ug/Kg |
| BH79490 | $8270_TCLR | Benzo(b)fluoranthene | NJ / Soil Remediation Standard / Non Res. Direct Contact | 8400 | 1100 | 2000 | 200 | ug/Kg |
| BH79490 | $8270_TCLR | Benzo(b)fluoranthene | NJ / Soil Remediation Standard / Res. Direct Contact | 8400 | 1100 | 600 | 200 | ug/Kg |
| BH79490 | $8270_TCLR | Benzo(b)fluoranthene | NY / 375-6.8 Semivolatiles / Unrestricted Use Soil | 8400 | 1100 | 1000 | 1000 | ug/Kg |
| BH79490 | $8270_TCLR | Benzo(k)fluoranthene | NY / 375-6.8 Semivolatiles / Unrestricted Use Soil | 3300 | 1100 | 800 | 800 | ug/Kg |
| BH79490 | $8270_TCLR | Benzo(a)pyrene | NJ / Soil Remediation Standard / Non Res. Direct Contact | 6500 | 1100 | 200 | 200 | ug/Kg |
| BH79490 | $8270_TCLR | Benzo(a)pyrene | NJ / Soil Remediation Standard / Res. Direct Contact | 6500 | 1100 | 200 | 200 | ug/Kg |
| BH79490 | $8270_TCLR | Benzo(a)pyrene | NY / 375-6.8 Semivolatiles / Unrestricted Use Soil | 6500 | 1100 | 1000 | 1000 | ug/Kg |
| BH79490 | $8270_TCLR | Indeno(1,2,3-cd)pyrene | NJ / Soil Remediation Standard / Res. Direct Contact | 2000 | 1100 | 600 | 200 | ug/Kg |
| BH79490 | $8270_TCLR | Indeno(1,2,3-cd)pyrene | NY / 375-6.8 Semivolatiles / Unrestricted Use Soil | 2000 | 1100 | 500 | 500 | ug/Kg |
| BH79490 | $8270_TCLR | Dibenz(a,h)anthracene | NJ / Soil Remediation Standard / Non Res. Direct Contact | ND | 1100 | 200 | 200 | ug/Kg |
| BH79490 | $8270_TCLR | Dibenz(a,h)anthracene | NJ / Soil Remediation Standard / Res. Direct Contact | ND | 1100 | 200 | 200 | ug/Kg |
| BH79490 | $8270_TCLR | Dibenz(a,h)anthracene | NY / 375-6.8 Semivolatiles / Unrestricted Use Soil | ND | 1100 | 330 | 330 | ug/Kg |
| BH79490 | $PESTSM_NY | 4,4' -DDE | NY / 375-6.8 PCBs/Pesticides / Unrestricted Use Soil | ND | 11 | 3.3 | 3.3 | ug/Kg |
| BH79490 | $PESTSM_NY | 4,4' -DDD | NY / 375-6.8 PCBs/Pesticides / Unrestricted Use Soil | ND | 11 | 3.3 | 3.3 | ug/Kg |
| BH79490 | $PESTSM_NY | 4,4' -DDT | NY / 375-6.8 PCBs/Pesticides / Unrestricted Use Soil | ND | 11 | 3.3 | 3.3 | ug/Kg |
| BH79490 | CR-SM | Chromium | NY / 375-6.8 Metals / Unrestricted Use Soil | 39.0 | 0.34 | 30 | | mg/Kg |
| BH79490 | CU-SM | Copper | NY / 375-6.8 Metals / Unrestricted Use Soil | 249 | 3.4 | 50 | 50 | mg/kg |
| BH79490 | HG-SM | Mercury | NY / 375-6.8 Metals / Unrestricted Use Soil | 0.27 | 0.03 | 0.18 | 0.18 | mg/Kg |
| BH79490 | NI-SM | Nickel | NY / 375-6.8 Metals / Unrestricted Use Soil | 38.2 | 0.34 | 30 | 30 | mg/Kg |
| BH79490 | PB-SM | Lead | NY / 375-6.8 Metals / Unrestricted Use Soil | 378 | 3.4 | 63 | 63 | mg/Kg |
| BH79490 | TCLP-PB | TCLP Lead | EPA / 40 CFR 261.24 / Toxicity Characteristics | 5.21 | 0.10 | 5 | 5 | mg/L |
| BH79490 | ZN-SM | Zinc | NY / 375-6.8 Metals / Unrestricted Use Soil | 407 | 3.4 | 109 | 109 | mg/Kg |

Phoenix Laboratories does not assume responsibility for the data contained in this report. It is provided as an additional tool to identify requested criteria exceedences. All efforts are made to ensure the accuracy of the data (obtained from appropriate agencies). A lack of exceedence information does not necessarily suggest conformance to the criteria. It is ultimately the site professional's responsibility to determine appropriate compliance.

# PHOENIX Environmental Laboratories, Inc.

## NY/NJ CHAIN OF CUSTODY RECORD

587 East Middle Turnpike, P.O. Box 370, Manchester, CT 06040
Email: info@phoenixlabs.com Fax (860) 645-0823
**Client Services (860) 645-8726**

Temp 4 / 4.9 K Pg 1 of 1

**Data Delivery:**
☐ Fax #:
☐ Email: info@hesny.com

Customer:
Address: HYDROENVIRONMENTAL SOLUTIONS
ONE DEANS BRIDGE ROAD
SOMERS, NEW YORK 10589

Project: 109 Mahtedale Rd, Tuckahoe, NY
Report to: Tim Carr
Invoice to: ↗

Project P.O:
Phone #: 914-276-2560
Fax #: 914-276-2664
tcarr@hesny.com

**Client Sample - Information - Identification**

Sampler's Signature: RG/[illegible] Date: 3/3/15

Analysis Request: See Attached

**Matrix Code:**
DW=drinking water WW=wastewater S=soil/solid O=oil
GW=groundwater SL=sludge A=air X=other

| Phoenix Sample # | Customer Sample Identification | Sample Matrix | Date Sampled | Time Sampled | 5g Encore | Soil VOA [ ] Methanol [ ] S. Bisulfate [ ] H2O | GL Soil container ( 8 ) oz | GL Soil container ( 4 ) oz | 40 ml VOA Vial [ ] As Is [ ] HCl | GL Amber 1000ml [ ] As is [ ] H2SO4 | PL As is [ ] 1250ml [ ] 500ml [ ] 1000ml | PL H2SO4 [ ] 250ml [ ] 1500ml | PL HNO3 250ml | PL NaOH 250ml | Bacteria Bottle |
|---|---|---|---|---|---|---|---|---|---|---|---|---|---|---|---|
| 79490 | TB-4 (0-10) | S | 3/3/15 | 2:00 | 3 | | 2 | 1 | | | | | | | |

| Relinquished by: | Accepted by: | Date: | Time: |
|---|---|---|---|
| [illegible] | [illegible] | 3-4-15 | 11:50 |
| [illegible] | [illegible] | 3/4/15 | 16:20 |
| | | | |

**Comments, Special Requirements or Regulations:**
Running attached CleanEarth Protocol for NJ disposal approval (13 tests)

**Turnaround:**
☐ 1 Day*
☐ 2 Days*
☐ 3 Days*
☒ Standard
☐ Other
* SURCHARGE APPLIES

**NJ**
☒ Res. Criteria
☒ Non-Res. Criteria
☒ Impact to GW Soil Cleanup Criteria
☐ GW Criteria

**NY**
☐ TAGM 4046 GW
☐ TAGM 4046 SOIL
☐ NY375 Unrestricted Soil
☒ NY375 Residential Soil
☐ NY375 Restricted Non-Residential Soil

**Data Format**
☐ Phoenix Std Report
☐ Excel
☒ PDF
☐ GIS/Key
☒ EQuIS
☐ NJ Hazsite EDD
☐ NY EZ EDD (ASP)
☐ Other

**Data Package**
☐ NJ Reduced Deliv. *
☐ NY Enhanced (ASP B) *
☐ Other

State where samples were collected: NY

BH79490

# Clean Earth Sampling Protocol
## Hybrid

| PARAMETERS | | TOTAL PETROLEUM HYDROCARBONS (TPHC): GRO & DRO - Expanded to C44 (GRAB SAMPLE) | EPH (Extractable Petroleum Hydrocarbon) | TOTAL VOLATILE ORGANICS (TCL+10 & 20 & NJDEP SCC List + NJDEP SRS List) | TOTAL SEMIVOLATILE ORGANICS (TCL + NJDEP SCC List + NJDEP SRS List) | Total Pesticides (TCL + NJDEP SRS List) | TAL Metals & Hexavalent Chromium and Mercury | TCLP METALS RCRA + Cu, Ni, Zn | IGNITABILITY | CORROSIVITY (PH) | REACTIVITY - SULFIDE AND CYANIDE | PCBs | TCLP VOLATILE ORGANICS (GRAB SAMPLE) | TCLP SEMI VOLATILE ORGANICS | TCLP HERBICIDES | TCLP PESTICIDES |
|---|---|---|---|---|---|---|---|---|---|---|---|---|---|---|---|---|
| METHODS | | 8015M (expanded to C44) | Extractable Petroleum Hydrocarbon /EPH | 8260B - with EnCore sampling devices | 8270D | 8081A/ 8151A | 6000/ 7000 | 1311/6010 | 1010A | 9040C | SW846 CHAPTER 7.3 | 8082A | 1311/ 8260B | 1311/ 8270D | 1311/ 8151A | 1311/ 8081B |
| | FREQUENCY | | | | | | | | | | | | | | | |
| HISTORIC FILL/ CONSTRUCTION FILL | Grab Sample Every 250 tons | X | | | | | | | | | | | | | | |
| | Grab - every 1000 tons | | | X | | | | | | | | | | | | |
| | 5 point composite - every 1000 tons | | | | X | X | X | X | X | X | X | X | | X | X | X |

(1) The methods provided are standard EPA methods. The method revisions are subject to change and the most current method should always be utilized by the laboratory.

This is to be used as a guideline for sampling. Sampling frequencies and parameter requirements may be modified at the discretion of the CE Approval staff based items such as site history, levels of contamination and/or source of contamination, etc.

Protocol for sampling requires the screening of each of the five (5) grab samples with a PID. The highest PID grab sample for every 1,000 tons is to be submitted for the VOC portion of the testing utilizing an ENCORE sampling device. The five (5) grab samples are then to be composited for every 1,000 tons and submitted for the remaining parameters.

**In addition, Clean Earth of Carteret requires 1 EPH analysis every 100 cy, which can be analyzed from incoming loads.**
**CEP facility requires 1 grab sample every 250 tons to be analyzed for TPH-DRO/GRO-Extended to C44, which can be analyzed once need arises.**
**CE requests that enough grabs for TPHs are collected and put on hold for further analysis as needed.**

10/28/2013

PHOENIX
Environmental Laboratories, Inc.

Monday, March 16, 2015

Attn: Mr. Tim Carr
HydroEnvironmental Solutions, Inc.
One Deans Bridge Rd
Somers NY 10589

Project ID: 109 MARBLEDALE RD., TUCKAHOE, NY
Sample ID#s: BH79483 - BH79489

This laboratory is in compliance with the NELAC requirements of procedures used except where indicated.

This report contains results for the parameters tested, under the sampling conditions described on the Chain Of Custody, as received by the laboratory.

All soils, solids and sludges are reported on a dry weight basis unless otherwise noted in the sample comments.

A scanned version of the COC form accompanies the analytical report and is an exact duplicate of the original.

If you have any questions concerning this testing, please do not hesitate to contact Phoenix Client Services at ext. 200.

Sincerely yours,

Phyllis Shiller
Laboratory Director

NELAC - #NY11301
CT Lab Registration #PH-0618
MA Lab Registration #MA-CT-007
ME Lab Registration #CT-007
NH Lab Registration #213693-A,B
NJ Lab Registration #CT-003
NY Lab Registration #11301
PA Lab Registration #68-03530
RI Lab Registration #63
VT Lab Registration #VT11301

587 East Middle Turnpike, P.O. Box 370, Manchester, CT 06040
Telephone (860) 645-1102 Fax (860) 645-0823

PHOENIX

Environmental Laboratories, Inc.
587 East Middle Turnpike, P.O.Box 370, Manchester, CT 06045
Tel. (860) 645-1102 Fax (860) 645-0823

ACCREDITED IN ACCORDANCE WITH nelac
NY # 11301

# SDG Comments

March 16, 2015

SDG I.D.: GBH79483

---

Please be advised that the NY 375 soil criteria for chromium are based on hexavalent chromium and trivalent chromium.

PHOENIX

Environmental Laboratories, Inc.
587 East Middle Turnpike, P.O.Box 370, Manchester, CT 06045
Tel. (860) 645-1102 Fax (860) 645-0823

ACCREDITED IN ACCORDANCE WITH nelac NY # 11301

# Analysis Report

March 16, 2015

FOR: Attn: Mr. Tim Carr
HydroEnvironmental Solutions, Inc.
One Deans Bridge Rd
Somers NY 10589

| Sample Information | | Custody Information | | Date | Time |
|---|---|---|---|---|---|
| Matrix: | SOIL | Collected by: | | 03/03/15 | 11:00 |
| Location Code: | HESNY-TUCK | Received by: | LB | 03/04/15 | 16:20 |
| Rush Request: | 72 Hour | Analyzed by: | see "By" below | | |
| P.O.#: | | | | | |

## Laboratory Data

SDG ID: GBH79483
Phoenix ID: BH79483

Project ID: 109 MARBLEDALE RD., TUCKAHOE, NY
Client ID: TB-3 (2-4)

| Parameter | Result | RL/ PQL | Units | Date/Time | By | Reference |
|---|---|---|---|---|---|---|
| Silver | < 0.37 | 0.37 | mg/Kg | 03/05/15 | LK | SW6010C |
| Aluminum | 15000 | 56 | mg/Kg | 03/05/15 | LK | SW6010C |
| Arsenic | 4.3 | 0.7 | mg/Kg | 03/05/15 | LK | SW6010C |
| Barium | 155 | 0.37 | mg/Kg | 03/05/15 | LK | SW6010C |
| Beryllium | 0.46 | 0.30 | mg/Kg | 03/05/15 | LK | SW6010C |
| Calcium | 13100 | 56 | mg/Kg | 03/05/15 | LK | SW6010C |
| Cadmium | < 0.37 | 0.37 | mg/Kg | 03/05/15 | LK | SW6010C |
| Cobalt | 12.9 | 0.37 | mg/Kg | 03/05/15 | LK | SW6010C |
| Chromium | 43.1 | 0.37 | mg/Kg | 03/05/15 | LK | SW6010C |
| Copper | 34.1 | 0.37 | mg/kg | 03/05/15 | LK | SW6010C |
| Iron | 24300 | 56 | mg/Kg | 03/05/15 | LK | SW6010C |
| Mercury | 0.06 | 0.03 | mg/Kg | 03/05/15 | MA | SW7471B |
| Potassium | 2360 | 5.6 | mg/Kg | 03/05/15 | LK | SW6010C |
| Magnesium | 9350 | 56 | mg/Kg | 03/05/15 | LK | SW6010C |
| Manganese | 404 | 3.7 | mg/Kg | 03/05/15 | LK | SW6010C |
| Sodium | 158 | 5.6 | mg/Kg | 03/05/15 | LK | SW6010C |
| Nickel | 28.1 | 0.37 | mg/Kg | 03/05/15 | LK | SW6010C |
| Lead | 180 | 3.7 | mg/Kg | 03/05/15 | LK | SW6010C |
| Antimony | < 3.7 | 3.7 | mg/Kg | 03/05/15 | LK | SW6010C |
| Selenium | < 1.5 | 1.5 | mg/Kg | 03/05/15 | LK | SW6010C |
| Thallium | < 3.3 | 3.3 | mg/Kg | 03/05/15 | LK | SW6010C |
| Vanadium | 62.5 | 0.37 | mg/Kg | 03/05/15 | LK | SW6010C |
| Zinc | 258 | 3.7 | mg/Kg | 03/05/15 | LK | SW6010C |
| Percent Solid | 82 | | % | 03/04/15 | I | SW846-%Solid |
| Total Cyanide | < 0.55 | 0.55 | mg/Kg | 03/04/15 | O/B/E | SW9012B |
| Soil Extraction for PCB | Completed | | | 03/04/15 | CC/H | SW3545A |
| Soil Extraction for SVOA | Completed | | | 03/04/15 | JJ/VH | SW3545A |
| Mercury Digestion | Completed | | | 03/05/15 | I/I | SW7471B |

Project ID: 109 MARBLEDALE RD., TUCKAHOE, NY
Client ID: TB-3 (2-4)

Phoenix I.D.: BH79483

| Parameter | Result | RL/ PQL | Units | Date/Time | By | Reference |
|---|---|---|---|---|---|---|
| Total Metals Digest | Completed | | | 03/04/15 | CB/AG | SW3050B |
| **Polychlorinated Biphenyls** | | | | | | |
| PCB-1016 | ND | 79 | ug/Kg | 03/05/15 | KCA | SW8082A |
| PCB-1221 | ND | 79 | ug/Kg | 03/05/15 | KCA | SW8082A |
| PCB-1232 | ND | 79 | ug/Kg | 03/05/15 | KCA | SW8082A |
| PCB-1242 | ND | 79 | ug/Kg | 03/05/15 | KCA | SW8082A |
| PCB-1248 | ND | 79 | ug/Kg | 03/05/15 | KCA | SW8082A |
| PCB-1254 | ND | 79 | ug/Kg | 03/05/15 | KCA | SW8082A |
| PCB-1260 | ND | 79 | ug/Kg | 03/05/15 | KCA | SW8082A |
| PCB-1262 | ND | 79 | ug/Kg | 03/05/15 | KCA | SW8082A |
| PCB-1268 | ND | 79 | ug/Kg | 03/05/15 | KCA | SW8082A |
| **QA/QC Surrogates** | | | | | | |
| % DCBP | 91 | | % | 03/05/15 | KCA | 30 - 150 % |
| % TCMX | 66 | | % | 03/05/15 | KCA | 30 - 150 % |
| **Volatiles (TCL)** | | | | | | |
| 1,1,1-Trichloroethane | ND | 8.1 | ug/kg | 03/05/15 | JLI | SW8260C |
| 1,1,2,2-Tetrachloroethane | ND | 8.1 | ug/kg | 03/05/15 | JLI | SW8260C |
| 1,1,2-Trichloroethane | ND | 8.1 | ug/kg | 03/05/15 | JLI | SW8260C |
| 1,1-Dichloroethane | ND | 8.1 | ug/kg | 03/05/15 | JLI | SW8260C |
| 1,1-Dichloroethene | ND | 8.1 | ug/kg | 03/05/15 | JLI | SW8260C |
| 1,2,3-Trichlorobenzene | ND | 360 | ug/kg | 03/05/15 | JLI | SW8260C |
| 1,2,4-Trichlorobenzene | ND | 360 | ug/kg | 03/05/15 | JLI | SW8260C |
| 1,2-Dibromo-3-chloropropane | ND | 360 | ug/kg | 03/05/15 | JLI | SW8260C |
| 1,2-Dibromoethane | ND | 8.1 | ug/kg | 03/05/15 | JLI | SW8260C |
| 1,2-Dichlorobenzene | ND | 360 | ug/kg | 03/05/15 | JLI | SW8260C |
| 1,2-Dichloroethane | ND | 8.1 | ug/kg | 03/05/15 | JLI | SW8260C |
| 1,2-Dichloropropane | ND | 8.1 | ug/kg | 03/05/15 | JLI | SW8260C |
| 1,3-Dichlorobenzene | ND | 360 | ug/kg | 03/05/15 | JLI | SW8260C |
| 1,4-Dichlorobenzene | ND | 360 | ug/kg | 03/05/15 | JLI | SW8260C |
| 2-Hexanone | ND | 41 | ug/kg | 03/05/15 | JLI | SW8260C |
| 4-Methyl-2-pentanone | ND | 41 | ug/kg | 03/05/15 | JLI | SW8260C |
| Acetone | 62 | 81 | ug/kg | 03/05/15 | JLI | SW8260C |
| Benzene | ND | 8.1 | ug/kg | 03/05/15 | JLI | SW8260C |
| Bromochloromethane | ND | 8.1 | ug/kg | 03/05/15 | JLI | SW8260C |
| Bromodichloromethane | ND | 8.1 | ug/kg | 03/05/15 | JLI | SW8260C |
| Bromoform | ND | 8.1 | ug/kg | 03/05/15 | JLI | SW8260C |
| Bromomethane | ND | 8.1 | ug/kg | 03/05/15 | JLI | SW8260C |
| Carbon Disulfide | ND | 8.1 | ug/kg | 03/05/15 | JLI | SW8260C |
| Carbon tetrachloride | ND | 8.1 | ug/kg | 03/05/15 | JLI | SW8260C |
| Chlorobenzene | ND | 20 | ug/kg | 03/05/15 | JLI | SW8260C |
| Chloroethane | ND | 8.1 | ug/kg | 03/05/15 | JLI | SW8260C |
| Chloroform | ND | 8.1 | ug/kg | 03/05/15 | JLI | SW8260C |
| Chloromethane | ND | 8.1 | ug/kg | 03/05/15 | JLI | SW8260C |
| cis-1,2-Dichloroethene | ND | 8.1 | ug/kg | 03/05/15 | JLI | SW8260C |
| cis-1,3-Dichloropropene | ND | 8.1 | ug/kg | 03/05/15 | JLI | SW8260C |
| Cyclohexane | ND | 8.1 | ug/kg | 03/05/15 | JLI | SW8260C |
| Dibromochloromethane | ND | 8.1 | ug/kg | 03/05/15 | JLI | SW8260C |
| Dichlorodifluoromethane | ND | 8.1 | ug/kg | 03/05/15 | JLI | SW8260C |

Project ID: 109 MARBLEDALE RD., TUCKAHOE, NY
Client ID: TB-3 (2-4)

Phoenix I.D.: BH79483

| Parameter | Result | RL/ PQL | Units | Date/Time | By | Reference |
|---|---|---|---|---|---|---|
| Ethylbenzene | ND | 8.1 | ug/kg | 03/05/15 | JLI | SW8260C |
| Isopropylbenzene | ND | 360 | ug/kg | 03/05/15 | JLI | SW8260C |
| m&p-Xylene | ND | 8.1 | ug/kg | 03/05/15 | JLI | SW8260C |
| Methyl ethyl ketone | ND | 49 | ug/kg | 03/05/15 | JLI | SW8260C |
| Methyl t-butyl ether (MTBE) | ND | 16 | ug/kg | 03/05/15 | JLI | SW8260C |
| Methylacetate | ND | 6.5 | ug/kg | 03/05/15 | JLI | SW8260C |
| Methylcyclohexane | ND | 8.1 | ug/kg | 03/05/15 | JLI | SW8260C |
| Methylene chloride | ND | 8.1 | ug/kg | 03/05/15 | JLI | SW8260C |
| o-Xylene | ND | 8.1 | ug/kg | 03/05/15 | JLI | SW8260C |
| Styrene | ND | 8.1 | ug/kg | 03/05/15 | JLI | SW8260C |
| Tetrachloroethene | ND | 8.1 | ug/kg | 03/05/15 | JLI | SW8260C |
| Toluene | ND | 8.1 | ug/kg | 03/05/15 | JLI | SW8260C |
| Total Xylenes | ND | 8.1 | ug/kg | 03/05/15 | JLI | SW8260C |
| trans-1,2-Dichloroethene | ND | 8.1 | ug/kg | 03/05/15 | JLI | SW8260C |
| trans-1,3-Dichloropropene | ND | 8.1 | ug/kg | 03/05/15 | JLI | SW8260C |
| Trichloroethene | ND | 8.1 | ug/kg | 03/05/15 | JLI | SW8260C |
| Trichlorofluoromethane | ND | 8.1 | ug/kg | 03/05/15 | JLI | SW8260C |
| Trichlorotrifluoroethane | ND | 8.1 | ug/kg | 03/05/15 | JLI | SW8260C |
| Vinyl chloride | ND | 8.1 | ug/kg | 03/05/15 | JLI | SW8260C |
| **QA/QC Surrogates** | | | | | | |
| % 1,2-dichlorobenzene-d4 | 98 | | % | 03/05/15 | JLI | 70 - 130 % |
| % Bromofluorobenzene | 90 | | % | 03/05/15 | JLI | 70 - 130 % |
| % Dibromofluoromethane | 99 | | % | 03/05/15 | JLI | 70 - 130 % |
| % Toluene-d8 | 96 | | % | 03/05/15 | JLI | 70 - 130 % |
| **1,4-dioxane** | | | | | | |
| 1,4-dioxane | ND | 96 | ug/kg | 03/05/15 | JLI | SW8260C |
| Volatile Library Search Top 10 | Completed | | | 03/05/15 | JLI | |
| **Semivolatiles** | | | | | | |
| 1,1-Biphenyl | ND | 560 | ug/Kg | 03/05/15 | DD | SW8270D |
| 1,2,4,5-Tetrachlorobenzene | ND | 560 | ug/Kg | 03/05/15 | DD | SW8270D |
| 2,3,4,6-tetrachlorophenol | ND | 560 | ug/Kg | 03/05/15 | DD | SW8270D |
| 2,4,5-Trichlorophenol | ND | 560 | ug/Kg | 03/05/15 | DD | SW8270D |
| 2,4,6-Trichlorophenol | ND | 560 | ug/Kg | 03/05/15 | DD | SW8270D |
| 2,4-Dichlorophenol | ND | 560 | ug/Kg | 03/05/15 | DD | SW8270D |
| 2,4-Dimethylphenol | ND | 560 | ug/Kg | 03/05/15 | DD | SW8270D |
| 2,4-Dinitrophenol | ND | 1300 | ug/Kg | 03/05/15 | DD | SW8270D |
| 2,4-Dinitrotoluene | ND | 560 | ug/Kg | 03/05/15 | DD | SW8270D |
| 2,6-Dinitrotoluene | ND | 560 | ug/Kg | 03/05/15 | DD | SW8270D |
| 2-Chloronaphthalene | ND | 560 | ug/Kg | 03/05/15 | DD | SW8270D |
| 2-Chlorophenol | ND | 560 | ug/Kg | 03/05/15 | DD | SW8270D |
| 2-Methylnaphthalene | 690 | 560 | ug/Kg | 03/05/15 | DD | SW8270D |
| 2-Methylphenol (o-cresol) | ND | 330 | ug/Kg | 03/05/15 | DD | SW8270D |
| 2-Nitroaniline | ND | 1300 | ug/Kg | 03/05/15 | DD | SW8270D |
| 2-Nitrophenol | ND | 560 | ug/Kg | 03/05/15 | DD | SW8270D |
| 3&4-Methylphenol (m&p-cresol) | ND | 800 | ug/Kg | 03/05/15 | DD | SW8270D 1 |
| 3,3'-Dichlorobenzidine | ND | 970 | ug/Kg | 03/05/15 | DD | SW8270D |
| 3-Nitroaniline | ND | 1300 | ug/Kg | 03/05/15 | DD | SW8270D |

Project ID: 109 MARBLEDALE RD., TUCKAHOE, NY
Client ID: TB-3 (2-4)

Phoenix I.D.: BH79483

| Parameter | Result | RL/ PQL | Units | Date/Time | By | Reference | |
|---|---|---|---|---|---|---|---|
| 4,6-Dinitro-2-methylphenol | ND | 2300 | ug/Kg | 03/05/15 | DD | SW8270D | |
| 4-Bromophenyl phenyl ether | ND | 800 | ug/Kg | 03/05/15 | DD | SW8270D | |
| 4-Chloro-3-methylphenol | ND | 560 | ug/Kg | 03/05/15 | DD | SW8270D | |
| 4-Chloroaniline | ND | 560 | ug/Kg | 03/05/15 | DD | SW8270D | |
| 4-Chlorophenyl phenyl ether | ND | 560 | ug/Kg | 03/05/15 | DD | SW8270D | |
| 4-Nitroaniline | ND | 1300 | ug/Kg | 03/05/15 | DD | SW8270D | |
| 4-Nitrophenol | ND | 2300 | ug/Kg | 03/05/15 | DD | SW8270D | |
| Acenaphthene | ND | 560 | ug/Kg | 03/05/15 | DD | SW8270D | |
| Acenaphthylene | 810 | 560 | ug/Kg | 03/05/15 | DD | SW8270D | |
| Acetophenone | ND | 560 | ug/Kg | 03/05/15 | DD | SW8270D | |
| Anthracene | 1500 | 560 | ug/Kg | 03/05/15 | DD | SW8270D | |
| Atrazine | ND | 560 | ug/Kg | 03/05/15 | DD | SW8270D | |
| Benz(a)anthracene | 5600 | 560 | ug/Kg | 03/05/15 | DD | SW8270D | |
| Benzaldehyde | ND | 560 | ug/Kg | 03/05/15 | DD | SW8270D | |
| Benzo(a)pyrene | 5800 | 560 | ug/Kg | 03/05/15 | DD | SW8270D | |
| Benzo(b)fluoranthene | 7700 | 560 | ug/Kg | 03/05/15 | DD | SW8270D | |
| Benzo(ghi)perylene | 2900 | 560 | ug/Kg | 03/05/15 | DD | SW8270D | |
| Benzo(k)fluoranthene | 2500 | 560 | ug/Kg | 03/05/15 | DD | SW8270D | |
| Benzyl butyl phthalate | ND | 560 | ug/Kg | 03/05/15 | DD | SW8270D | |
| Bis(2-chloroethoxy)methane | ND | 560 | ug/Kg | 03/05/15 | DD | SW8270D | |
| Bis(2-chloroethyl)ether | ND | 800 | ug/Kg | 03/05/15 | DD | SW8270D | |
| Bis(2-chloroisopropyl)ether | ND | 560 | ug/Kg | 03/05/15 | DD | SW8270D | 1 |
| Bis(2-ethylhexyl)phthalate | 780 | 560 | ug/Kg | 03/05/15 | DD | SW8270D | |
| Caprolactam | ND | 560 | ug/Kg | 03/05/15 | DD | SW8270D | |
| Carbazole | ND | 2300 | ug/Kg | 03/05/15 | DD | SW8270D | |
| Chrysene | 6000 | 560 | ug/Kg | 03/05/15 | DD | SW8270D | |
| Dibenz(a,h)anthracene | 790 | 560 | ug/Kg | 03/05/15 | DD | SW8270D | |
| Dibenzofuran | ND | 560 | ug/Kg | 03/05/15 | DD | SW8270D | |
| Diethyl phthalate | ND | 560 | ug/Kg | 03/05/15 | DD | SW8270D | |
| Dimethylphthalate | ND | 560 | ug/Kg | 03/05/15 | DD | SW8270D | |
| Di-n-butylphthalate | ND | 560 | ug/Kg | 03/05/15 | DD | SW8270D | |
| Di-n-octylphthalate | ND | 560 | ug/Kg | 03/05/15 | DD | SW8270D | |
| Fluoranthene | 7100 | 560 | ug/Kg | 03/05/15 | DD | SW8270D | |
| Fluorene | ND | 560 | ug/Kg | 03/05/15 | DD | SW8270D | |
| Hexachlorobenzene | ND | 560 | ug/Kg | 03/05/15 | DD | SW8270D | |
| Hexachlorobutadiene | ND | 560 | ug/Kg | 03/05/15 | DD | SW8270D | |
| Hexachlorocyclopentadiene | ND | 560 | ug/Kg | 03/05/15 | DD | SW8270D | |
| Hexachloroethane | ND | 560 | ug/Kg | 03/05/15 | DD | SW8270D | |
| Indeno(1,2,3-cd)pyrene | 2700 | 560 | ug/Kg | 03/05/15 | DD | SW8270D | |
| Isophorone | ND | 560 | ug/Kg | 03/05/15 | DD | SW8270D | |
| Naphthalene | 720 | 560 | ug/Kg | 03/05/15 | DD | SW8270D | |
| Nitrobenzene | ND | 560 | ug/Kg | 03/05/15 | DD | SW8270D | |
| N-Nitrosodimethylamine | ND | 800 | ug/Kg | 03/05/15 | DD | SW8270D | |
| N-Nitrosodi-n-propylamine | ND | 560 | ug/Kg | 03/05/15 | DD | SW8270D | |
| N-Nitrosodiphenylamine | ND | 800 | ug/Kg | 03/05/15 | DD | SW8270D | |
| Pentachlorophenol | ND | 800 | ug/Kg | 03/05/15 | DD | SW8270D | |
| Phenanthrene | 4100 | 560 | ug/Kg | 03/05/15 | DD | SW8270D | |
| Phenol | ND | 330 | ug/Kg | 03/05/15 | DD | SW8270D | |
| Pyrene | 5800 | 560 | ug/Kg | 03/05/15 | DD | SW8270D | |

Project ID: 109 MARBLEDALE RD., TUCKAHOE, NY
Client ID: TB-3 (2-4)

Phoenix I.D.: BH79483

| Parameter | Result | RL/ PQL | Units | Date/Time | By | Reference |
|---|---|---|---|---|---|---|
| **QA/QC Surrogates** | | | | | | |
| % 2,4,6-Tribromophenol | 81 | | % | 03/05/15 | DD | 30 - 130 % |
| % 2-Fluorobiphenyl | 71 | | % | 03/05/15 | DD | 30 - 130 % |
| % 2-Fluorophenol | 67 | | % | 03/05/15 | DD | 30 - 130 % |
| % Nitrobenzene-d5 | 70 | | % | 03/05/15 | DD | 30 - 130 % |
| % Phenol-d5 | 66 | | % | 03/05/15 | DD | 30 - 130 % |
| % Terphenyl-d14 | 55 | | % | 03/05/15 | DD | 30 - 130 % |
| SVOA Library Search Top 15 | Completed | | | 03/06/15 | DD | |

1 = This parameter is not certified by NY NELAC for this matrix. NY NELAC does not offer certification for all parameters at this time.

**RL/PQL=Reporting/Practical Quantitation Level (Equivalent to NELAC LOQ, Limit of Quanitation) ND=Not Detected BRL=Below Reporting Level**

## Comments:

Please be advised that the NY 375 soil criteria for chromium are based on hexavalent chromium and trivalent chromium.

Semi-Volatile Comment:
Due to a matrix interference and/or the presence of a large amount of non-target material in the sample, a dilution was required resulting in an elevated RL for the semivolatile analysis.

All soils, solids and sludges are reported on a dry weight basis unless otherwise noted in the sample comments.

If there are any questions regarding this data, please call Phoenix Client Services at extension 200.
This report must not be reproduced except in full as defined by the attached chain of custody.

**Phyllis Shiller, Laboratory Director**
**March 16, 2015**
**Reviewed and Released by: Phyllis Shiller, Laboratory Director**

PHOENIX

Environmental Laboratories, Inc.
587 East Middle Turnpike, P.O.Box 370, Manchester, CT 06045
Tel. (860) 645-1102 Fax (860) 645-0823

ACCREDITED IN ACCORDANCE WITH nelac NY # 11301

# Analysis Report

March 16, 2015

FOR: Attn: Mr. Tim Carr
HydroEnvironmental Solutions, Inc.
One Deans Bridge Rd
Somers NY 10589

| Sample Information | | Custody Information | | Date | Time |
|---|---|---|---|---|---|
| Matrix: | SOIL | Collected by: | | 03/03/15 | 14:00 |
| Location Code: | HESNY-TUCK | Received by: | LB | 03/04/15 | 16:20 |
| Rush Request: | 72 Hour | Analyzed by: | see "By" below | | |
| P.O.#: | | | | | |

## Laboratory Data

SDG ID: GBH79483
Phoenix ID: BH79484

Project ID: 109 MARBLEDALE RD., TUCKAHOE, NY
Client ID: TB-4 (24-26)

| Parameter | Result | RL/ PQL | Units | Date/Time | By | Reference |
|---|---|---|---|---|---|---|
| Silver | < 0.39 | 0.39 | mg/Kg | 03/05/15 | LK | SW6010C |
| Aluminum | 8790 | 58 | mg/Kg | 03/05/15 | LK | SW6010C |
| Arsenic | 12.0 | 0.8 | mg/Kg | 03/05/15 | LK | SW6010C |
| Barium | 104 | 0.39 | mg/Kg | 03/05/15 | LK | SW6010C |
| Beryllium | < 0.31 | 0.31 | mg/Kg | 03/05/15 | LK | SW6010C |
| Calcium | 21600 | 58 | mg/Kg | 03/05/15 | LK | SW6010C |
| Cadmium | 1.15 | 0.39 | mg/Kg | 03/05/15 | LK | SW6010C |
| Cobalt | 9.44 | 0.39 | mg/Kg | 03/05/15 | LK | SW6010C |
| Chromium | 36.5 | 0.39 | mg/Kg | 03/05/15 | LK | SW6010C |
| Copper | 150 | 3.9 | mg/kg | 03/05/15 | LK | SW6010C |
| Iron | 24900 | 58 | mg/Kg | 03/05/15 | LK | SW6010C |
| Mercury | 0.34 | 0.03 | mg/Kg | 03/05/15 | MA | SW7471B |
| Potassium | 1540 | 5.8 | mg/Kg | 03/05/15 | LK | SW6010C |
| Magnesium | 6890 | 58 | mg/Kg | 03/05/15 | LK | SW6010C |
| Manganese | 286 | 3.9 | mg/Kg | 03/05/15 | LK | SW6010C |
| Sodium | 354 | 5.8 | mg/Kg | 03/05/15 | LK | SW6010C |
| Nickel | 28.6 | 0.39 | mg/Kg | 03/05/15 | LK | SW6010C |
| Lead | 419 | 3.9 | mg/Kg | 03/05/15 | LK | SW6010C |
| Antimony | < 3.9 | 3.9 | mg/Kg | 03/05/15 | LK | SW6010C |
| Selenium | < 1.5 | 1.5 | mg/Kg | 03/05/15 | LK | SW6010C |
| Thallium | < 3.5 | 3.5 | mg/Kg | 03/05/15 | LK | SW6010C |
| Vanadium | 56.4 | 0.39 | mg/Kg | 03/05/15 | LK | SW6010C |
| Zinc | 342 | 3.9 | mg/Kg | 03/05/15 | LK | SW6010C |
| Percent Solid | 79 | | % | 03/04/15 | I | SW846-%Solid |
| Total Cyanide | < 0.63 | 0.63 | mg/Kg | 03/04/15 | O/B/E | SW9012B |
| Soil Extraction for PCB | Completed | | | 03/04/15 | CC/H | SW3545A |
| Soil Extraction for SVOA | Completed | | | 03/04/15 | JJ/VH | SW3545A |
| Mercury Digestion | Completed | | | 03/05/15 | I/I | SW7471B |

Project ID: 109 MARBLEDALE RD., TUCKAHOE, NY
Client ID: TB-4 (24-26)

Phoenix I.D.: BH79484

| Parameter | Result | RL/ PQL | Units | Date/Time | By | Reference |
|---|---|---|---|---|---|---|
| Total Metals Digest | Completed | | | 03/04/15 | CB/AG | SW3050B |
| **Polychlorinated Biphenyls** | | | | | | |
| PCB-1016 | ND | 410 | ug/Kg | 03/06/15 | AW | SW8082A |
| PCB-1221 | ND | 410 | ug/Kg | 03/06/15 | AW | SW8082A |
| PCB-1232 | ND | 410 | ug/Kg | 03/06/15 | AW | SW8082A |
| PCB-1242 | ND | 410 | ug/Kg | 03/06/15 | AW | SW8082A |
| PCB-1248 | ND | 410 | ug/Kg | 03/06/15 | AW | SW8082A |
| PCB-1254 | ND | 410 | ug/Kg | 03/06/15 | AW | SW8082A |
| PCB-1260 | 1100 | 410 | ug/Kg | 03/06/15 | AW | SW8082A |
| PCB-1262 | ND | 410 | ug/Kg | 03/06/15 | AW | SW8082A |
| PCB-1268 | ND | 410 | ug/Kg | 03/06/15 | AW | SW8082A |
| **QA/QC Surrogates** | | | | | | |
| % DCBP | 120 | | % | 03/06/15 | AW | 30 - 150 % |
| % TCMX | 82 | | % | 03/06/15 | AW | 30 - 150 % |
| **Volatiles (TCL)** | | | | | | |
| 1,1,1-Trichloroethane | ND | 8.1 | ug/kg | 03/05/15 | JLI | SW8260C |
| 1,1,2,2-Tetrachloroethane | ND | 8.1 | ug/kg | 03/05/15 | JLI | SW8260C |
| 1,1,2-Trichloroethane | ND | 8.1 | ug/kg | 03/05/15 | JLI | SW8260C |
| 1,1-Dichloroethane | ND | 8.1 | ug/kg | 03/05/15 | JLI | SW8260C |
| 1,1-Dichloroethene | ND | 8.1 | ug/kg | 03/05/15 | JLI | SW8260C |
| 1,2,3-Trichlorobenzene | ND | 360 | ug/kg | 03/05/15 | JLI | SW8260C |
| 1,2,4-Trichlorobenzene | ND | 360 | ug/kg | 03/05/15 | JLI | SW8260C |
| 1,2-Dibromo-3-chloropropane | ND | 360 | ug/kg | 03/05/15 | JLI | SW8260C |
| 1,2-Dibromoethane | ND | 8.1 | ug/kg | 03/05/15 | JLI | SW8260C |
| 1,2-Dichlorobenzene | ND | 360 | ug/kg | 03/05/15 | JLI | SW8260C |
| 1,2-Dichloroethane | ND | 8.1 | ug/kg | 03/05/15 | JLI | SW8260C |
| 1,2-Dichloropropane | ND | 8.1 | ug/kg | 03/05/15 | JLI | SW8260C |
| 1,3-Dichlorobenzene | ND | 360 | ug/kg | 03/05/15 | JLI | SW8260C |
| 1,4-Dichlorobenzene | ND | 360 | ug/kg | 03/05/15 | JLI | SW8260C |
| 2-Hexanone | ND | 41 | ug/kg | 03/05/15 | JLI | SW8260C |
| 4-Methyl-2-pentanone | ND | 41 | ug/kg | 03/05/15 | JLI | SW8260C |
| Acetone | 250 | 81 | ug/kg | 03/05/15 | JLI | SW8260C |
| Benzene | ND | 8.1 | ug/kg | 03/05/15 | JLI | SW8260C |
| Bromochloromethane | ND | 8.1 | ug/kg | 03/05/15 | JLI | SW8260C |
| Bromodichloromethane | ND | 8.1 | ug/kg | 03/05/15 | JLI | SW8260C |
| Bromoform | ND | 8.1 | ug/kg | 03/05/15 | JLI | SW8260C |
| Bromomethane | ND | 8.1 | ug/kg | 03/05/15 | JLI | SW8260C |
| Carbon Disulfide | ND | 8.1 | ug/kg | 03/05/15 | JLI | SW8260C |
| Carbon tetrachloride | ND | 8.1 | ug/kg | 03/05/15 | JLI | SW8260C |
| Chlorobenzene | ND | 20 | ug/kg | 03/05/15 | JLI | SW8260C |
| Chloroethane | ND | 8.1 | ug/kg | 03/05/15 | JLI | SW8260C |
| Chloroform | ND | 8.1 | ug/kg | 03/05/15 | JLI | SW8260C |
| Chloromethane | ND | 8.1 | ug/kg | 03/05/15 | JLI | SW8260C |
| cis-1,2-Dichloroethene | ND | 8.1 | ug/kg | 03/05/15 | JLI | SW8260C |
| cis-1,3-Dichloropropene | ND | 8.1 | ug/kg | 03/05/15 | JLI | SW8260C |
| Cyclohexane | ND | 8.1 | ug/kg | 03/05/15 | JLI | SW8260C |
| Dibromochloromethane | ND | 8.1 | ug/kg | 03/05/15 | JLI | SW8260C |
| Dichlorodifluoromethane | ND | 8.1 | ug/kg | 03/05/15 | JLI | SW8260C |

Project ID: 109 MARBLEDALE RD., TUCKAHOE, NY
Client ID: TB-4 (24-26)

Phoenix I.D.: BH79484

| Parameter | Result | RL/ PQL | Units | Date/Time | By | Reference |
|---|---|---|---|---|---|---|
| Ethylbenzene | ND | 8.1 | ug/kg | 03/05/15 | JLI | SW8260C |
| Isopropylbenzene | ND | 360 | ug/kg | 03/05/15 | JLI | SW8260C |
| m&p-Xylene | ND | 8.1 | ug/kg | 03/05/15 | JLI | SW8260C |
| Methyl ethyl ketone | 110 | 49 | ug/kg | 03/05/15 | JLI | SW8260C |
| Methyl t-butyl ether (MTBE) | ND | 16 | ug/kg | 03/05/15 | JLI | SW8260C |
| Methylacetate | ND | 6.5 | ug/kg | 03/05/15 | JLI | SW8260C |
| Methylcyclohexane | 13 | 8.1 | ug/kg | 03/05/15 | JLI | SW8260C |
| Methylene chloride | ND | 8.1 | ug/kg | 03/05/15 | JLI | SW8260C |
| o-Xylene | ND | 8.1 | ug/kg | 03/05/15 | JLI | SW8260C |
| Styrene | ND | 8.1 | ug/kg | 03/05/15 | JLI | SW8260C |
| Tetrachloroethene | ND | 8.1 | ug/kg | 03/05/15 | JLI | SW8260C |
| Toluene | ND | 8.1 | ug/kg | 03/05/15 | JLI | SW8260C |
| Total Xylenes | ND | 8.1 | ug/kg | 03/05/15 | JLI | SW8260C |
| trans-1,2-Dichloroethene | ND | 8.1 | ug/kg | 03/05/15 | JLI | SW8260C |
| trans-1,3-Dichloropropene | ND | 8.1 | ug/kg | 03/05/15 | JLI | SW8260C |
| Trichloroethene | ND | 8.1 | ug/kg | 03/05/15 | JLI | SW8260C |
| Trichlorofluoromethane | ND | 8.1 | ug/kg | 03/05/15 | JLI | SW8260C |
| Trichlorotrifluoroethane | ND | 8.1 | ug/kg | 03/05/15 | JLI | SW8260C |
| Vinyl chloride | ND | 8.1 | ug/kg | 03/05/15 | JLI | SW8260C |
| **QA/QC Surrogates** | | | | | | |
| % 1,2-dichlorobenzene-d4 | 97 | | % | 03/05/15 | JLI | 70 - 130 % |
| % Bromofluorobenzene | 101 | | % | 03/05/15 | JLI | 70 - 130 % |
| % Dibromofluoromethane | 99 | | % | 03/05/15 | JLI | 70 - 130 % |
| % Toluene-d8 | 86 | | % | 03/05/15 | JLI | 70 - 130 % |
| **1,4-dioxane** | | | | | | |
| 1,4-dioxane | ND | 100 | ug/kg | 03/05/15 | JLI | SW8260C |
| Volatile Library Search Top 10 | Completed | | | 03/05/15 | JLI | |
| **Semivolatiles** | | | | | | |
| 1,1-Biphenyl | ND | 590 | ug/Kg | 03/05/15 | DD | SW8270D |
| 1,2,4,5-Tetrachlorobenzene | ND | 590 | ug/Kg | 03/05/15 | DD | SW8270D |
| 2,3,4,6-tetrachlorophenol | ND | 590 | ug/Kg | 03/05/15 | DD | SW8270D |
| 2,4,5-Trichlorophenol | ND | 590 | ug/Kg | 03/05/15 | DD | SW8270D |
| 2,4,6-Trichlorophenol | ND | 590 | ug/Kg | 03/05/15 | DD | SW8270D |
| 2,4-Dichlorophenol | ND | 590 | ug/Kg | 03/05/15 | DD | SW8270D |
| 2,4-Dimethylphenol | ND | 590 | ug/Kg | 03/05/15 | DD | SW8270D |
| 2,4-Dinitrophenol | ND | 1300 | ug/Kg | 03/05/15 | DD | SW8270D |
| 2,4-Dinitrotoluene | ND | 590 | ug/Kg | 03/05/15 | DD | SW8270D |
| 2,6-Dinitrotoluene | ND | 590 | ug/Kg | 03/05/15 | DD | SW8270D |
| 2-Chloronaphthalene | ND | 590 | ug/Kg | 03/05/15 | DD | SW8270D |
| 2-Chlorophenol | ND | 590 | ug/Kg | 03/05/15 | DD | SW8270D |
| 2-Methylnaphthalene | ND | 590 | ug/Kg | 03/05/15 | DD | SW8270D |
| 2-Methylphenol (o-cresol) | ND | 330 | ug/Kg | 03/05/15 | DD | SW8270D |
| 2-Nitroaniline | ND | 1300 | ug/Kg | 03/05/15 | DD | SW8270D |
| 2-Nitrophenol | ND | 590 | ug/Kg | 03/05/15 | DD | SW8270D |
| 3&4-Methylphenol (m&p-cresol) | ND | 840 | ug/Kg | 03/05/15 | DD | SW8270D 1 |
| 3,3'-Dichlorobenzidine | ND | 1000 | ug/Kg | 03/05/15 | DD | SW8270D |
| 3-Nitroaniline | ND | 1300 | ug/Kg | 03/05/15 | DD | SW8270D |

Project ID: 109 MARBLEDALE RD., TUCKAHOE, NY
Client ID: TB-4 (24-26)

Phoenix I.D.: BH79484

| Parameter | Result | RL/ PQL | Units | Date/Time | By | Reference | |
|---|---|---|---|---|---|---|---|
| 4,6-Dinitro-2-methylphenol | ND | 2400 | ug/Kg | 03/05/15 | DD | SW8270D | |
| 4-Bromophenyl phenyl ether | ND | 840 | ug/Kg | 03/05/15 | DD | SW8270D | |
| 4-Chloro-3-methylphenol | ND | 590 | ug/Kg | 03/05/15 | DD | SW8270D | |
| 4-Chloroaniline | ND | 590 | ug/Kg | 03/05/15 | DD | SW8270D | |
| 4-Chlorophenyl phenyl ether | ND | 590 | ug/Kg | 03/05/15 | DD | SW8270D | |
| 4-Nitroaniline | ND | 1300 | ug/Kg | 03/05/15 | DD | SW8270D | |
| 4-Nitrophenol | ND | 2400 | ug/Kg | 03/05/15 | DD | SW8270D | |
| Acenaphthene | ND | 590 | ug/Kg | 03/05/15 | DD | SW8270D | |
| Acenaphthylene | ND | 590 | ug/Kg | 03/05/15 | DD | SW8270D | |
| Acetophenone | ND | 590 | ug/Kg | 03/05/15 | DD | SW8270D | |
| Anthracene | ND | 590 | ug/Kg | 03/05/15 | DD | SW8270D | |
| Atrazine | ND | 590 | ug/Kg | 03/05/15 | DD | SW8270D | |
| Benz(a)anthracene | ND | 590 | ug/Kg | 03/05/15 | DD | SW8270D | |
| Benzaldehyde | ND | 590 | ug/Kg | 03/05/15 | DD | SW8270D | |
| Benzo(a)pyrene | ND | 590 | ug/Kg | 03/05/15 | DD | SW8270D | |
| Benzo(b)fluoranthene | 790 | 590 | ug/Kg | 03/05/15 | DD | SW8270D | |
| Benzo(ghi)perylene | ND | 590 | ug/Kg | 03/05/15 | DD | SW8270D | |
| Benzo(k)fluoranthene | ND | 590 | ug/Kg | 03/05/15 | DD | SW8270D | |
| Benzyl butyl phthalate | ND | 590 | ug/Kg | 03/05/15 | DD | SW8270D | |
| Bis(2-chloroethoxy)methane | ND | 590 | ug/Kg | 03/05/15 | DD | SW8270D | |
| Bis(2-chloroethyl)ether | ND | 840 | ug/Kg | 03/05/15 | DD | SW8270D | |
| Bis(2-chloroisopropyl)ether | ND | 590 | ug/Kg | 03/05/15 | DD | SW8270D | 1 |
| Bis(2-ethylhexyl)phthalate | 3600 | 590 | ug/Kg | 03/05/15 | DD | SW8270D | |
| Caprolactam | ND | 590 | ug/Kg | 03/05/15 | DD | SW8270D | |
| Carbazole | ND | 2400 | ug/Kg | 03/05/15 | DD | SW8270D | |
| Chrysene | 730 | 590 | ug/Kg | 03/05/15 | DD | SW8270D | |
| Dibenz(a,h)anthracene | ND | 330 | ug/Kg | 03/05/15 | DD | SW8270D | |
| Dibenzofuran | ND | 590 | ug/Kg | 03/05/15 | DD | SW8270D | |
| Diethyl phthalate | ND | 590 | ug/Kg | 03/05/15 | DD | SW8270D | |
| Dimethylphthalate | ND | 590 | ug/Kg | 03/05/15 | DD | SW8270D | |
| Di-n-butylphthalate | ND | 590 | ug/Kg | 03/05/15 | DD | SW8270D | |
| Di-n-octylphthalate | ND | 590 | ug/Kg | 03/05/15 | DD | SW8270D | |
| Fluoranthene | 850 | 590 | ug/Kg | 03/05/15 | DD | SW8270D | |
| Fluorene | ND | 590 | ug/Kg | 03/05/15 | DD | SW8270D | |
| Hexachlorobenzene | ND | 590 | ug/Kg | 03/05/15 | DD | SW8270D | |
| Hexachlorobutadiene | ND | 590 | ug/Kg | 03/05/15 | DD | SW8270D | |
| Hexachlorocyclopentadiene | ND | 590 | ug/Kg | 03/05/15 | DD | SW8270D | |
| Hexachloroethane | ND | 590 | ug/Kg | 03/05/15 | DD | SW8270D | |
| Indeno(1,2,3-cd)pyrene | ND | 500 | ug/Kg | 03/05/15 | DD | SW8270D | |
| Isophorone | ND | 590 | ug/Kg | 03/05/15 | DD | SW8270D | |
| Naphthalene | ND | 590 | ug/Kg | 03/05/15 | DD | SW8270D | |
| Nitrobenzene | ND | 590 | ug/Kg | 03/05/15 | DD | SW8270D | |
| N-Nitrosodimethylamine | ND | 840 | ug/Kg | 03/05/15 | DD | SW8270D | |
| N-Nitrosodi-n-propylamine | ND | 590 | ug/Kg | 03/05/15 | DD | SW8270D | |
| N-Nitrosodiphenylamine | ND | 840 | ug/Kg | 03/05/15 | DD | SW8270D | |
| Pentachlorophenol | ND | 800 | ug/Kg | 03/05/15 | DD | SW8270D | |
| Phenanthrene | 800 | 590 | ug/Kg | 03/05/15 | DD | SW8270D | |
| Phenol | ND | 330 | ug/Kg | 03/05/15 | DD | SW8270D | |
| Pyrene | 670 | 590 | ug/Kg | 03/05/15 | DD | SW8270D | |

Project ID: 109 MARBLEDALE RD., TUCKAHOE, NY
Client ID: TB-4 (24-26)

Phoenix I.D.: BH79484

| Parameter | Result | RL/ PQL | Units | Date/Time | By | Reference |
|---|---|---|---|---|---|---|
| **QA/QC Surrogates** | | | | | | |
| % 2,4,6-Tribromophenol | 76 | | % | 03/05/15 | DD | 30 - 130 % |
| % 2-Fluorobiphenyl | 63 | | % | 03/05/15 | DD | 30 - 130 % |
| % 2-Fluorophenol | 49 | | % | 03/05/15 | DD | 30 - 130 % |
| % Nitrobenzene-d5 | 60 | | % | 03/05/15 | DD | 30 - 130 % |
| % Phenol-d5 | 54 | | % | 03/05/15 | DD | 30 - 130 % |
| % Terphenyl-d14 | 50 | | % | 03/05/15 | DD | 30 - 130 % |
| SVOA Library Search Top 15 | Completed | | | 03/06/15 | DD | |

1 = This parameter is not certified by NY NELAC for this matrix. NY NELAC does not offer certification for all parameters at this time.

**RL/PQL=Reporting/Practical Quantitation Level (Equivalent to NELAC LOQ, Limit of Quanitation) ND=Not Detected BRL=Below Reporting Level**

## Comments:

Please be advised that the NY 375 soil criteria for chromium are based on hexavalent chromium and trivalent chromium.

Volatile Comment:
There was a suppression of the last internal standard in the low level analysis, all affected compounds are reported from the methanol preserved high level analysis which did not exhibit this interference.

Semi-Volatile Comment:
Due to a matrix interference and/or the presence of a large amount of non-target material in the sample, a dilution was required resulting in an elevated RL for the semivolatile analysis.

All soils, solids and sludges are reported on a dry weight basis unless otherwise noted in the sample comments.

If there are any questions regarding this data, please call Phoenix Client Services at extension 200.
This report must not be reproduced except in full as defined by the attached chain of custody.

**Phyllis Shiller, Laboratory Director**
**March 16, 2015**
**Reviewed and Released by: Phyllis Shiller, Laboratory Director**

PHOENIX

Environmental Laboratories, Inc.
587 East Middle Turnpike, P.O.Box 370, Manchester, CT 06045
Tel. (860) 645-1102 Fax (860) 645-0823

ACCREDITED IN ACCORDANCE WITH nelac NY # 11301

# Analysis Report

March 16, 2015

FOR: Attn: Mr. Tim Carr
HydroEnvironmental Solutions, Inc.
One Deans Bridge Rd
Somers NY 10589

| Sample Information | | Custody Information | | Date | Time |
|---|---|---|---|---|---|
| Matrix: | SOIL | Collected by: | | 03/03/15 | 14:00 |
| Location Code: | HESNY-TUCK | Received by: | LB | 03/04/15 | 16:20 |
| Rush Request: | 72 Hour | Analyzed by: | see "By" below | | |
| P.O.#: | | | | | |

## Laboratory Data

SDG ID: GBH79483
Phoenix ID: BH79485

Project ID: 109 MARBLEDALE RD., TUCKAHOE, NY
Client ID: TB-4 (30-32)

| Parameter | Result | RL/ PQL | Units | Date/Time | By | Reference |
|---|---|---|---|---|---|---|
| Silver | < 0.51 | 0.51 | mg/Kg | 03/05/15 | LK | SW6010C |
| Aluminum | 11300 | 76 | mg/Kg | 03/05/15 | LK | SW6010C |
| Arsenic | 25.1 | 1.0 | mg/Kg | 03/05/15 | LK | SW6010C |
| Barium | 1120 | 0.51 | mg/Kg | 03/05/15 | LK | SW6010C |
| Beryllium | 0.46 | 0.40 | mg/Kg | 03/05/15 | LK | SW6010C |
| Calcium | 5090 | 7.6 | mg/Kg | 03/05/15 | LK | SW6010C |
| Cadmium | 3.12 | 0.51 | mg/Kg | 03/05/15 | LK | SW6010C |
| Cobalt | 6.72 | 0.51 | mg/Kg | 03/05/15 | LK | SW6010C |
| Chromium | 82.0 | 0.51 | mg/Kg | 03/05/15 | LK | SW6010C |
| Copper | 69.0 | 0.51 | mg/kg | 03/05/15 | LK | SW6010C |
| Iron | 15500 | 76 | mg/Kg | 03/05/15 | LK | SW6010C |
| Mercury | 0.29 | 0.04 | mg/Kg | 03/05/15 | MA | SW7471B |
| Potassium | 1640 | 7.6 | mg/Kg | 03/05/15 | LK | SW6010C |
| Magnesium | 3580 | 7.6 | mg/Kg | 03/05/15 | LK | SW6010C |
| Manganese | 278 | 5.1 | mg/Kg | 03/05/15 | LK | SW6010C |
| Sodium | 229 | 7.6 | mg/Kg | 03/05/15 | LK | SW6010C |
| Nickel | 21.8 | 0.51 | mg/Kg | 03/05/15 | LK | SW6010C |
| Lead | 589 | 5.1 | mg/Kg | 03/05/15 | LK | SW6010C |
| Antimony | < 5.1 | 5.1 | mg/Kg | 03/05/15 | LK | SW6010C |
| Selenium | < 2.0 | 2.0 | mg/Kg | 03/05/15 | LK | SW6010C |
| Thallium | < 4.6 | 4.6 | mg/Kg | 03/05/15 | LK | SW6010C |
| Vanadium | 80.5 | 0.51 | mg/Kg | 03/05/15 | LK | SW6010C |
| Zinc | 216 | 5.1 | mg/Kg | 03/05/15 | LK | SW6010C |
| Percent Solid | 61 | | % | 03/04/15 | I | SW846-%Solid |
| Total Cyanide | < 0.82 | 0.82 | mg/Kg | 03/04/15 | O/B/E | SW9012B |
| Soil Extraction for PCB | Completed | | | 03/04/15 | CC/H | SW3545A |
| Soil Extraction for SVOA | Completed | | | 03/04/15 | JJ/VH | SW3545A |
| Mercury Digestion | Completed | | | 03/05/15 | I/I | SW7471B |

Project ID: 109 MARBLEDALE RD., TUCKAHOE, NY
Client ID: TB-4 (30-32)

Phoenix I.D.: BH79485

| Parameter | Result | RL/ PQL | Units | Date/Time | By | Reference |
|---|---|---|---|---|---|---|
| Total Metals Digest | Completed | | | 03/04/15 | CB/AG | SW3050B |
| **Polychlorinated Biphenyls** | | | | | | |
| PCB-1016 | ND | 54 | ug/Kg | 03/06/15 | AW | SW8082A |
| PCB-1221 | ND | 54 | ug/Kg | 03/06/15 | AW | SW8082A |
| PCB-1232 | ND | 54 | ug/Kg | 03/06/15 | AW | SW8082A |
| PCB-1242 | ND | 54 | ug/Kg | 03/06/15 | AW | SW8082A |
| PCB-1248 | ND | 54 | ug/Kg | 03/06/15 | AW | SW8082A |
| PCB-1254 | ND | 54 | ug/Kg | 03/06/15 | AW | SW8082A |
| PCB-1260 | ND | 54 | ug/Kg | 03/06/15 | AW | SW8082A |
| PCB-1262 | ND | 54 | ug/Kg | 03/06/15 | AW | SW8082A |
| PCB-1268 | ND | 54 | ug/Kg | 03/06/15 | AW | SW8082A |
| **QA/QC Surrogates** | | | | | | |
| % DCBP | 46 | | % | 03/06/15 | AW | 30 - 150 % |
| % TCMX | 51 | | % | 03/06/15 | AW | 30 - 150 % |
| **Volatiles (TCL)** | | | | | | |
| 1,1,1-Trichloroethane | ND | 8.1 | ug/kg | 03/05/15 | JLI | SW8260C |
| 1,1,2,2-Tetrachloroethane | ND | 8.1 | ug/kg | 03/05/15 | JLI | SW8260C |
| 1,1,2-Trichloroethane | ND | 8.1 | ug/kg | 03/05/15 | JLI | SW8260C |
| 1,1-Dichloroethane | ND | 8.1 | ug/kg | 03/05/15 | JLI | SW8260C |
| 1,1-Dichloroethene | ND | 8.1 | ug/kg | 03/05/15 | JLI | SW8260C |
| 1,2,3-Trichlorobenzene | ND | 360 | ug/kg | 03/05/15 | JLI | SW8260C |
| 1,2,4-Trichlorobenzene | ND | 360 | ug/kg | 03/05/15 | JLI | SW8260C |
| 1,2-Dibromo-3-chloropropane | ND | 360 | ug/kg | 03/05/15 | JLI | SW8260C |
| 1,2-Dibromoethane | ND | 8.1 | ug/kg | 03/05/15 | JLI | SW8260C |
| 1,2-Dichlorobenzene | ND | 360 | ug/kg | 03/05/15 | JLI | SW8260C |
| 1,2-Dichloroethane | ND | 8.1 | ug/kg | 03/05/15 | JLI | SW8260C |
| 1,2-Dichloropropane | ND | 8.1 | ug/kg | 03/05/15 | JLI | SW8260C |
| 1,3-Dichlorobenzene | ND | 360 | ug/kg | 03/05/15 | JLI | SW8260C |
| 1,4-Dichlorobenzene | ND | 360 | ug/kg | 03/05/15 | JLI | SW8260C |
| 2-Hexanone | ND | 41 | ug/kg | 03/05/15 | JLI | SW8260C |
| 4-Methyl-2-pentanone | ND | 41 | ug/kg | 03/05/15 | JLI | SW8260C |
| Acetone | 220 | 81 | ug/kg | 03/05/15 | JLI | SW8260C |
| Benzene | ND | 8.1 | ug/kg | 03/05/15 | JLI | SW8260C |
| Bromochloromethane | ND | 8.1 | ug/kg | 03/05/15 | JLI | SW8260C |
| Bromodichloromethane | ND | 8.1 | ug/kg | 03/05/15 | JLI | SW8260C |
| Bromoform | ND | 8.1 | ug/kg | 03/05/15 | JLI | SW8260C |
| Bromomethane | ND | 8.1 | ug/kg | 03/05/15 | JLI | SW8260C |
| Carbon Disulfide | ND | 8.1 | ug/kg | 03/05/15 | JLI | SW8260C |
| Carbon tetrachloride | ND | 8.1 | ug/kg | 03/05/15 | JLI | SW8260C |
| Chlorobenzene | ND | 20 | ug/kg | 03/05/15 | JLI | SW8260C |
| Chloroethane | ND | 8.1 | ug/kg | 03/05/15 | JLI | SW8260C |
| Chloroform | ND | 8.1 | ug/kg | 03/05/15 | JLI | SW8260C |
| Chloromethane | ND | 8.1 | ug/kg | 03/05/15 | JLI | SW8260C |
| cis-1,2-Dichloroethene | ND | 8.1 | ug/kg | 03/05/15 | JLI | SW8260C |
| cis-1,3-Dichloropropene | ND | 8.1 | ug/kg | 03/05/15 | JLI | SW8260C |
| Cyclohexane | ND | 8.1 | ug/kg | 03/05/15 | JLI | SW8260C |
| Dibromochloromethane | ND | 8.1 | ug/kg | 03/05/15 | JLI | SW8260C |
| Dichlorodifluoromethane | ND | 8.1 | ug/kg | 03/05/15 | JLI | SW8260C |

| Parameter | Result | RL/ PQL | Units | Date/Time | By | Reference |
|---|---|---|---|---|---|---|
| Ethylbenzene | ND | 8.1 | ug/kg | 03/05/15 | JLI | SW8260C |
| Isopropylbenzene | ND | 360 | ug/kg | 03/05/15 | JLI | SW8260C |
| m&p-Xylene | ND | 8.1 | ug/kg | 03/05/15 | JLI | SW8260C |
| Methyl ethyl ketone | 110 | 49 | ug/kg | 03/05/15 | JLI | SW8260C |
| Methyl t-butyl ether (MTBE) | ND | 16 | ug/kg | 03/05/15 | JLI | SW8260C |
| Methylacetate | ND | 6.5 | ug/kg | 03/05/15 | JLI | SW8260C |
| Methylcyclohexane | 12 | 8.1 | ug/kg | 03/05/15 | JLI | SW8260C |
| Methylene chloride | ND | 8.1 | ug/kg | 03/05/15 | JLI | SW8260C |
| o-Xylene | ND | 8.1 | ug/kg | 03/05/15 | JLI | SW8260C |
| Styrene | ND | 8.1 | ug/kg | 03/05/15 | JLI | SW8260C |
| Tetrachloroethene | ND | 8.1 | ug/kg | 03/05/15 | JLI | SW8260C |
| Toluene | ND | 8.1 | ug/kg | 03/05/15 | JLI | SW8260C |
| Total Xylenes | ND | 8.1 | ug/kg | 03/05/15 | JLI | SW8260C |
| trans-1,2-Dichloroethene | ND | 8.1 | ug/kg | 03/05/15 | JLI | SW8260C |
| trans-1,3-Dichloropropene | ND | 8.1 | ug/kg | 03/05/15 | JLI | SW8260C |
| Trichloroethene | ND | 8.1 | ug/kg | 03/05/15 | JLI | SW8260C |
| Trichlorofluoromethane | ND | 8.1 | ug/kg | 03/05/15 | JLI | SW8260C |
| Trichlorotrifluoroethane | ND | 8.1 | ug/kg | 03/05/15 | JLI | SW8260C |
| Vinyl chloride | ND | 8.1 | ug/kg | 03/05/15 | JLI | SW8260C |
| **QA/QC Surrogates** | | | | | | |
| % 1,2-dichlorobenzene-d4 | 94 | | % | 03/05/15 | JLI | 70 - 130 % |
| % Bromofluorobenzene | 100 | | % | 03/05/15 | JLI | 70 - 130 % |
| % Dibromofluoromethane | 105 | | % | 03/05/15 | JLI | 70 - 130 % |
| % Toluene-d8 | 84 | | % | 03/05/15 | JLI | 70 - 130 % |
| **1,4-dioxane** | | | | | | |
| 1,4-dioxane | ND | 100 | ug/kg | 03/05/15 | JLI | SW8260C |
| Volatile Library Search Top 10 | Completed | | | 03/05/15 | JLI | |
| **Semivolatiles** | | | | | | |
| 1,1-Biphenyl | ND | 380 | ug/Kg | 03/05/15 | DD | SW8270D |
| 1,2,4,5-Tetrachlorobenzene | ND | 380 | ug/Kg | 03/05/15 | DD | SW8270D |
| 2,3,4,6-tetrachlorophenol | ND | 380 | ug/Kg | 03/05/15 | DD | SW8270D |
| 2,4,5-Trichlorophenol | ND | 380 | ug/Kg | 03/05/15 | DD | SW8270D |
| 2,4,6-Trichlorophenol | ND | 380 | ug/Kg | 03/05/15 | DD | SW8270D |
| 2,4-Dichlorophenol | ND | 380 | ug/Kg | 03/05/15 | DD | SW8270D |
| 2,4-Dimethylphenol | ND | 380 | ug/Kg | 03/05/15 | DD | SW8270D |
| 2,4-Dinitrophenol | ND | 870 | ug/Kg | 03/05/15 | DD | SW8270D |
| 2,4-Dinitrotoluene | ND | 380 | ug/Kg | 03/05/15 | DD | SW8270D |
| 2,6-Dinitrotoluene | ND | 380 | ug/Kg | 03/05/15 | DD | SW8270D |
| 2-Chloronaphthalene | ND | 380 | ug/Kg | 03/05/15 | DD | SW8270D |
| 2-Chlorophenol | ND | 380 | ug/Kg | 03/05/15 | DD | SW8270D |
| 2-Methylnaphthalene | ND | 380 | ug/Kg | 03/05/15 | DD | SW8270D |
| 2-Methylphenol (o-cresol) | ND | 330 | ug/Kg | 03/05/15 | DD | SW8270D |
| 2-Nitroaniline | ND | 870 | ug/Kg | 03/05/15 | DD | SW8270D |
| 2-Nitrophenol | ND | 380 | ug/Kg | 03/05/15 | DD | SW8270D |
| 3&4-Methylphenol (m&p-cresol) | ND | 540 | ug/Kg | 03/05/15 | DD | SW8270D 1 |
| 3,3'-Dichlorobenzidine | ND | 650 | ug/Kg | 03/05/15 | DD | SW8270D |
| 3-Nitroaniline | ND | 870 | ug/Kg | 03/05/15 | DD | SW8270D |

Project ID: 109 MARBLEDALE RD., TUCKAHOE, NY
Client ID: TB-4 (30-32)

Phoenix I.D.: BH79485

| Parameter | Result | RL/ PQL | Units | Date/Time | By | Reference | |
|---|---|---|---|---|---|---|---|
| 4,6-Dinitro-2-methylphenol | ND | 1600 | ug/Kg | 03/05/15 | DD | SW8270D | |
| 4-Bromophenyl phenyl ether | ND | 540 | ug/Kg | 03/05/15 | DD | SW8270D | |
| 4-Chloro-3-methylphenol | ND | 380 | ug/Kg | 03/05/15 | DD | SW8270D | |
| 4-Chloroaniline | ND | 380 | ug/Kg | 03/05/15 | DD | SW8270D | |
| 4-Chlorophenyl phenyl ether | ND | 380 | ug/Kg | 03/05/15 | DD | SW8270D | |
| 4-Nitroaniline | ND | 870 | ug/Kg | 03/05/15 | DD | SW8270D | |
| 4-Nitrophenol | ND | 1600 | ug/Kg | 03/05/15 | DD | SW8270D | |
| Acenaphthene | ND | 380 | ug/Kg | 03/05/15 | DD | SW8270D | |
| Acenaphthylene | ND | 380 | ug/Kg | 03/05/15 | DD | SW8270D | |
| Acetophenone | ND | 380 | ug/Kg | 03/05/15 | DD | SW8270D | |
| Anthracene | ND | 380 | ug/Kg | 03/05/15 | DD | SW8270D | |
| Atrazine | ND | 380 | ug/Kg | 03/05/15 | DD | SW8270D | |
| Benz(a)anthracene | ND | 380 | ug/Kg | 03/05/15 | DD | SW8270D | |
| Benzaldehyde | 620 | 380 | ug/Kg | 03/05/15 | DD | SW8270D | |
| Benzo(a)pyrene | ND | 380 | ug/Kg | 03/05/15 | DD | SW8270D | |
| Benzo(b)fluoranthene | 640 | 380 | ug/Kg | 03/05/15 | DD | SW8270D | |
| Benzo(ghi)perylene | ND | 380 | ug/Kg | 03/05/15 | DD | SW8270D | |
| Benzo(k)fluoranthene | ND | 380 | ug/Kg | 03/05/15 | DD | SW8270D | |
| Benzyl butyl phthalate | ND | 380 | ug/Kg | 03/05/15 | DD | SW8270D | |
| Bis(2-chloroethoxy)methane | ND | 380 | ug/Kg | 03/05/15 | DD | SW8270D | |
| Bis(2-chloroethyl)ether | ND | 540 | ug/Kg | 03/05/15 | DD | SW8270D | |
| Bis(2-chloroisopropyl)ether | ND | 380 | ug/Kg | 03/05/15 | DD | SW8270D | 1 |
| Bis(2-ethylhexyl)phthalate | 3200 | 380 | ug/Kg | 03/05/15 | DD | SW8270D | |
| Caprolactam | ND | 380 | ug/Kg | 03/05/15 | DD | SW8270D | |
| Carbazole | ND | 1600 | ug/Kg | 03/05/15 | DD | SW8270D | |
| Chrysene | 640 | 380 | ug/Kg | 03/05/15 | DD | SW8270D | |
| Dibenz(a,h)anthracene | ND | 330 | ug/Kg | 03/05/15 | DD | SW8270D | |
| Dibenzofuran | ND | 380 | ug/Kg | 03/05/15 | DD | SW8270D | |
| Diethyl phthalate | ND | 380 | ug/Kg | 03/05/15 | DD | SW8270D | |
| Dimethylphthalate | ND | 380 | ug/Kg | 03/05/15 | DD | SW8270D | |
| Di-n-butylphthalate | ND | 380 | ug/Kg | 03/05/15 | DD | SW8270D | |
| Di-n-octylphthalate | ND | 380 | ug/Kg | 03/05/15 | DD | SW8270D | |
| Fluoranthene | 990 | 380 | ug/Kg | 03/05/15 | DD | SW8270D | |
| Fluorene | ND | 380 | ug/Kg | 03/05/15 | DD | SW8270D | |
| Hexachlorobenzene | ND | 380 | ug/Kg | 03/05/15 | DD | SW8270D | |
| Hexachlorobutadiene | ND | 380 | ug/Kg | 03/05/15 | DD | SW8270D | |
| Hexachlorocyclopentadiene | ND | 380 | ug/Kg | 03/05/15 | DD | SW8270D | |
| Hexachloroethane | ND | 380 | ug/Kg | 03/05/15 | DD | SW8270D | |
| Indeno(1,2,3-cd)pyrene | ND | 380 | ug/Kg | 03/05/15 | DD | SW8270D | |
| Isophorone | ND | 380 | ug/Kg | 03/05/15 | DD | SW8270D | |
| Naphthalene | ND | 380 | ug/Kg | 03/05/15 | DD | SW8270D | |
| Nitrobenzene | ND | 380 | ug/Kg | 03/05/15 | DD | SW8270D | |
| N-Nitrosodimethylamine | ND | 540 | ug/Kg | 03/05/15 | DD | SW8270D | |
| N-Nitrosodi-n-propylamine | ND | 380 | ug/Kg | 03/05/15 | DD | SW8270D | |
| N-Nitrosodiphenylamine | ND | 540 | ug/Kg | 03/05/15 | DD | SW8270D | |
| Pentachlorophenol | ND | 540 | ug/Kg | 03/05/15 | DD | SW8270D | |
| Phenanthrene | 440 | 380 | ug/Kg | 03/05/15 | DD | SW8270D | |
| Phenol | ND | 330 | ug/Kg | 03/05/15 | DD | SW8270D | |
| Pyrene | 810 | 380 | ug/Kg | 03/05/15 | DD | SW8270D | |

Project ID: 109 MARBLEDALE RD., TUCKAHOE, NY
Client ID: TB-4 (30-32)

Phoenix I.D.: BH79485

| Parameter | Result | RL/ PQL | Units | Date/Time | By | Reference |
|---|---|---|---|---|---|---|
| **QA/QC Surrogates** | | | | | | |
| % 2,4,6-Tribromophenol | 92 | | % | 03/05/15 | DD | 30 - 130 % |
| % 2-Fluorobiphenyl | 70 | | % | 03/05/15 | DD | 30 - 130 % |
| % 2-Fluorophenol | 60 | | % | 03/05/15 | DD | 30 - 130 % |
| % Nitrobenzene-d5 | 66 | | % | 03/05/15 | DD | 30 - 130 % |
| % Phenol-d5 | 64 | | % | 03/05/15 | DD | 30 - 130 % |
| % Terphenyl-d14 | 68 | | % | 03/05/15 | DD | 30 - 130 % |
| SVOA Library Search Top 15 | Completed | | | 03/06/15 | DD | |

1 = This parameter is not certified by NY NELAC for this matrix. NY NELAC does not offer certification for all parameters at this time.

**RL/PQL=Reporting/Practical Quantitation Level (Equivalent to NELAC LOQ, Limit of Quanitation) ND=Not Detected BRL=Below Reporting Level**

## Comments:

Please be advised that the NY 375 soil criteria for chromium are based on hexavalent chromium and trivalent chromium.

Volatile Comment:
There was a suppression of the last internal standard in the low level analysis, all affected compounds are reported from the methanol preserved high level analysis which did not exhibit this interference.

All soils, solids and sludges are reported on a dry weight basis unless otherwise noted in the sample comments.

If there are any questions regarding this data, please call Phoenix Client Services at extension 200.
This report must not be reproduced except in full as defined by the attached chain of custody.

**Phyllis Shiller, Laboratory Director**
**March 16, 2015**
**Reviewed and Released by: Phyllis Shiller, Laboratory Director**

PHOENIX

Environmental Laboratories, Inc.
587 East Middle Turnpike, P.O.Box 370, Manchester, CT 06045
Tel. (860) 645-1102 Fax (860) 645-0823

ACCREDITED IN ACCORDANCE WITH nelac NY # 11301

# Analysis Report

March 16, 2015

FOR: Attn: Mr. Tim Carr
HydroEnvironmental Solutions, Inc.
One Deans Bridge Rd
Somers NY 10589

| Sample Information | | Custody Information | | Date | Time |
|---|---|---|---|---|---|
| Matrix: | SOIL | Collected by: | | 03/02/15 | 12:00 |
| Location Code: | HESNY-TUCK | Received by: | LB | 03/04/15 | 16:20 |
| Rush Request: | 72 Hour | Analyzed by: | see "By" below | | |
| P.O.#: | | | | | |

## Laboratory Data

SDG ID: GBH79483
Phoenix ID: BH79486

Project ID: 109 MARBLEDALE RD., TUCKAHOE, NY
Client ID: TB-9 (2-4)

| Parameter | Result | RL/ PQL | Units | Date/Time | By | Reference |
|---|---|---|---|---|---|---|
| Silver | < 0.36 | 0.36 | mg/Kg | 03/05/15 | LK | SW6010C |
| Aluminum | 10600 | 54 | mg/Kg | 03/05/15 | LK | SW6010C |
| Arsenic | 3.3 | 0.7 | mg/Kg | 03/05/15 | LK | SW6010C |
| Barium | 79.1 | 0.36 | mg/Kg | 03/05/15 | LK | SW6010C |
| Beryllium | 0.34 | 0.29 | mg/Kg | 03/05/15 | LK | SW6010C |
| Calcium | 15600 | 54 | mg/Kg | 03/05/15 | LK | SW6010C |
| Cadmium | < 0.36 | 0.36 | mg/Kg | 03/05/15 | LK | SW6010C |
| Cobalt | 9.57 | 0.36 | mg/Kg | 03/05/15 | LK | SW6010C |
| Chromium | 25.2 | 0.36 | mg/Kg | 03/05/15 | LK | SW6010C |
| Copper | 60.7 | 0.36 | mg/kg | 03/05/15 | LK | SW6010C |
| Iron | 20100 | 54 | mg/Kg | 03/05/15 | LK | SW6010C |
| Mercury | 0.04 | 0.03 | mg/Kg | 03/05/15 | MA | SW7471B |
| Potassium | 2340 | 5.4 | mg/Kg | 03/05/15 | LK | SW6010C |
| Magnesium | 6620 | 54 | mg/Kg | 03/05/15 | LK | SW6010C |
| Manganese | 279 | 3.6 | mg/Kg | 03/05/15 | LK | SW6010C |
| Sodium | 289 | 5.4 | mg/Kg | 03/05/15 | LK | SW6010C |
| Nickel | 20.3 | 0.36 | mg/Kg | 03/05/15 | LK | SW6010C |
| Lead | 52.5 | 0.36 | mg/Kg | 03/05/15 | LK | SW6010C |
| Antimony | < 3.6 | 3.6 | mg/Kg | 03/05/15 | LK | SW6010C |
| Selenium | < 1.4 | 1.4 | mg/Kg | 03/05/15 | LK | SW6010C |
| Thallium | < 3.2 | 3.2 | mg/Kg | 03/05/15 | LK | SW6010C |
| Vanadium | 42.0 | 0.36 | mg/Kg | 03/05/15 | LK | SW6010C |
| Zinc | 71.0 | 0.36 | mg/Kg | 03/05/15 | LK | SW6010C |
| Percent Solid | 87 | | % | 03/04/15 | I | SW846-%Solid |
| Total Cyanide | < 0.48 | 0.48 | mg/Kg | 03/04/15 | O/B/E | SW9012B |
| Soil Extraction for PCB | Completed | | | 03/04/15 | CC/H | SW3545A |
| Soil Extraction for SVOA | Completed | | | 03/04/15 | JJ/VH | SW3545A |
| Mercury Digestion | Completed | | | 03/05/15 | I/I | SW7471B |

Project ID: 109 MARBLEDALE RD., TUCKAHOE, NY
Client ID: TB-9 (2-4)

Phoenix I.D.: BH79486

| Parameter | Result | RL/ PQL | Units | Date/Time | By | Reference |
|---|---|---|---|---|---|---|
| Total Metals Digest | Completed | | | 03/04/15 | CB/AG | SW3050B |
| **Polychlorinated Biphenyls** | | | | | | |
| PCB-1016 | ND | 74 | ug/Kg | 03/05/15 | KCA | SW8082A |
| PCB-1221 | ND | 74 | ug/Kg | 03/05/15 | KCA | SW8082A |
| PCB-1232 | ND | 74 | ug/Kg | 03/05/15 | KCA | SW8082A |
| PCB-1242 | ND | 74 | ug/Kg | 03/05/15 | KCA | SW8082A |
| PCB-1248 | ND | 74 | ug/Kg | 03/05/15 | KCA | SW8082A |
| PCB-1254 | ND | 74 | ug/Kg | 03/05/15 | KCA | SW8082A |
| PCB-1260 | ND | 74 | ug/Kg | 03/05/15 | KCA | SW8082A |
| PCB-1262 | ND | 74 | ug/Kg | 03/05/15 | KCA | SW8082A |
| PCB-1268 | ND | 74 | ug/Kg | 03/05/15 | KCA | SW8082A |
| **QA/QC Surrogates** | | | | | | |
| % DCBP | 65 | | % | 03/05/15 | KCA | 30 - 150 % |
| % TCMX | 68 | | % | 03/05/15 | KCA | 30 - 150 % |
| **Volatiles (TCL)** | | | | | | |
| 1,1,1-Trichloroethane | ND | 8.1 | ug/kg | 03/05/15 | JLI | SW8260C |
| 1,1,2,2-Tetrachloroethane | ND | 8.1 | ug/kg | 03/05/15 | JLI | SW8260C |
| 1,1,2-Trichloroethane | ND | 8.1 | ug/kg | 03/05/15 | JLI | SW8260C |
| 1,1-Dichloroethane | ND | 8.1 | ug/kg | 03/05/15 | JLI | SW8260C |
| 1,1-Dichloroethene | ND | 8.1 | ug/kg | 03/05/15 | JLI | SW8260C |
| 1,2,3-Trichlorobenzene | ND | 360 | ug/kg | 03/05/15 | JLI | SW8260C |
| 1,2,4-Trichlorobenzene | ND | 360 | ug/kg | 03/05/15 | JLI | SW8260C |
| 1,2-Dibromo-3-chloropropane | ND | 360 | ug/kg | 03/05/15 | JLI | SW8260C |
| 1,2-Dibromoethane | ND | 8.1 | ug/kg | 03/05/15 | JLI | SW8260C |
| 1,2-Dichlorobenzene | ND | 360 | ug/kg | 03/05/15 | JLI | SW8260C |
| 1,2-Dichloroethane | ND | 8.1 | ug/kg | 03/05/15 | JLI | SW8260C |
| 1,2-Dichloropropane | ND | 8.1 | ug/kg | 03/05/15 | JLI | SW8260C |
| 1,3-Dichlorobenzene | ND | 360 | ug/kg | 03/05/15 | JLI | SW8260C |
| 1,4-Dichlorobenzene | ND | 360 | ug/kg | 03/05/15 | JLI | SW8260C |
| 2-Hexanone | ND | 41 | ug/kg | 03/05/15 | JLI | SW8260C |
| 4-Methyl-2-pentanone | ND | 41 | ug/kg | 03/05/15 | JLI | SW8260C |
| Acetone | ND | 50 | ug/kg | 03/05/15 | JLI | SW8260C |
| Benzene | ND | 8.1 | ug/kg | 03/05/15 | JLI | SW8260C |
| Bromochloromethane | ND | 8.1 | ug/kg | 03/05/15 | JLI | SW8260C |
| Bromodichloromethane | ND | 8.1 | ug/kg | 03/05/15 | JLI | SW8260C |
| Bromoform | ND | 8.1 | ug/kg | 03/05/15 | JLI | SW8260C |
| Bromomethane | ND | 8.1 | ug/kg | 03/05/15 | JLI | SW8260C |
| Carbon Disulfide | ND | 8.1 | ug/kg | 03/05/15 | JLI | SW8260C |
| Carbon tetrachloride | ND | 8.1 | ug/kg | 03/05/15 | JLI | SW8260C |
| Chlorobenzene | ND | 20 | ug/kg | 03/05/15 | JLI | SW8260C |
| Chloroethane | ND | 8.1 | ug/kg | 03/05/15 | JLI | SW8260C |
| Chloroform | ND | 8.1 | ug/kg | 03/05/15 | JLI | SW8260C |
| Chloromethane | ND | 8.1 | ug/kg | 03/05/15 | JLI | SW8260C |
| cis-1,2-Dichloroethene | ND | 8.1 | ug/kg | 03/05/15 | JLI | SW8260C |
| cis-1,3-Dichloropropene | ND | 8.1 | ug/kg | 03/05/15 | JLI | SW8260C |
| Cyclohexane | ND | 8.1 | ug/kg | 03/05/15 | JLI | SW8260C |
| Dibromochloromethane | ND | 8.1 | ug/kg | 03/05/15 | JLI | SW8260C |
| Dichlorodifluoromethane | ND | 8.1 | ug/kg | 03/05/15 | JLI | SW8260C |

Project ID: 109 MARBLEDALE RD., TUCKAHOE, NY
Client ID: TB-9 (2-4)

Phoenix I.D.: BH79486

| Parameter | Result | RL/ PQL | Units | Date/Time | By | Reference |
|---|---|---|---|---|---|---|
| Ethylbenzene | ND | 8.1 | ug/kg | 03/05/15 | JLI | SW8260C |
| Isopropylbenzene | ND | 360 | ug/kg | 03/05/15 | JLI | SW8260C |
| m&p-Xylene | ND | 8.1 | ug/kg | 03/05/15 | JLI | SW8260C |
| Methyl ethyl ketone | ND | 49 | ug/kg | 03/05/15 | JLI | SW8260C |
| Methyl t-butyl ether (MTBE) | ND | 16 | ug/kg | 03/05/15 | JLI | SW8260C |
| Methylacetate | ND | 6.5 | ug/kg | 03/05/15 | JLI | SW8260C |
| Methylcyclohexane | ND | 8.1 | ug/kg | 03/05/15 | JLI | SW8260C |
| Methylene chloride | ND | 8.1 | ug/kg | 03/05/15 | JLI | SW8260C |
| o-Xylene | ND | 8.1 | ug/kg | 03/05/15 | JLI | SW8260C |
| Styrene | ND | 8.1 | ug/kg | 03/05/15 | JLI | SW8260C |
| Tetrachloroethene | ND | 8.1 | ug/kg | 03/05/15 | JLI | SW8260C |
| Toluene | ND | 8.1 | ug/kg | 03/05/15 | JLI | SW8260C |
| Total Xylenes | ND | 8.1 | ug/kg | 03/05/15 | JLI | SW8260C |
| trans-1,2-Dichloroethene | ND | 8.1 | ug/kg | 03/05/15 | JLI | SW8260C |
| trans-1,3-Dichloropropene | ND | 8.1 | ug/kg | 03/05/15 | JLI | SW8260C |
| Trichloroethene | ND | 8.1 | ug/kg | 03/05/15 | JLI | SW8260C |
| Trichlorofluoromethane | ND | 8.1 | ug/kg | 03/05/15 | JLI | SW8260C |
| Trichlorotrifluoroethane | ND | 8.1 | ug/kg | 03/05/15 | JLI | SW8260C |
| Vinyl chloride | ND | 8.1 | ug/kg | 03/05/15 | JLI | SW8260C |
| **QA/QC Surrogates** | | | | | | |
| % 1,2-dichlorobenzene-d4 | 95 | | % | 03/05/15 | JLI | 70 - 130 % |
| % Bromofluorobenzene | 88 | | % | 03/05/15 | JLI | 70 - 130 % |
| % Dibromofluoromethane | 99 | | % | 03/05/15 | JLI | 70 - 130 % |
| % Toluene-d8 | 91 | | % | 03/05/15 | JLI | 70 - 130 % |
| **1,4-dioxane** | | | | | | |
| 1,4-dioxane | ND | 100 | ug/kg | 03/05/15 | JLI | SW8260C |
| Volatile Library Search Top 10 | Completed | | | 03/05/15 | JLI | |
| **Semivolatiles** | | | | | | |
| 1,1-Biphenyl | ND | 530 | ug/Kg | 03/05/15 | DD | SW8270D |
| 1,2,4,5-Tetrachlorobenzene | ND | 530 | ug/Kg | 03/05/15 | DD | SW8270D |
| 2,3,4,6-tetrachlorophenol | ND | 530 | ug/Kg | 03/05/15 | DD | SW8270D |
| 2,4,5-Trichlorophenol | ND | 530 | ug/Kg | 03/05/15 | DD | SW8270D |
| 2,4,6-Trichlorophenol | ND | 530 | ug/Kg | 03/05/15 | DD | SW8270D |
| 2,4-Dichlorophenol | ND | 530 | ug/Kg | 03/05/15 | DD | SW8270D |
| 2,4-Dimethylphenol | ND | 530 | ug/Kg | 03/05/15 | DD | SW8270D |
| 2,4-Dinitrophenol | ND | 1200 | ug/Kg | 03/05/15 | DD | SW8270D |
| 2,4-Dinitrotoluene | ND | 530 | ug/Kg | 03/05/15 | DD | SW8270D |
| 2,6-Dinitrotoluene | ND | 530 | ug/Kg | 03/05/15 | DD | SW8270D |
| 2-Chloronaphthalene | ND | 530 | ug/Kg | 03/05/15 | DD | SW8270D |
| 2-Chlorophenol | ND | 530 | ug/Kg | 03/05/15 | DD | SW8270D |
| 2-Methylnaphthalene | ND | 530 | ug/Kg | 03/05/15 | DD | SW8270D |
| 2-Methylphenol (o-cresol) | ND | 330 | ug/Kg | 03/05/15 | DD | SW8270D |
| 2-Nitroaniline | ND | 1200 | ug/Kg | 03/05/15 | DD | SW8270D |
| 2-Nitrophenol | ND | 530 | ug/Kg | 03/05/15 | DD | SW8270D |
| 3&4-Methylphenol (m&p-cresol) | ND | 760 | ug/Kg | 03/05/15 | DD | SW8270D 1 |
| 3,3'-Dichlorobenzidine | ND | 920 | ug/Kg | 03/05/15 | DD | SW8270D |
| 3-Nitroaniline | ND | 1200 | ug/Kg | 03/05/15 | DD | SW8270D |

Project ID: 109 MARBLEDALE RD., TUCKAHOE, NY
Client ID: TB-9 (2-4)

Phoenix I.D.: BH79486

| Parameter | Result | RL/ PQL | Units | Date/Time | By | Reference | |
|---|---|---|---|---|---|---|---|
| 4,6-Dinitro-2-methylphenol | ND | 2200 | ug/Kg | 03/05/15 | DD | SW8270D | |
| 4-Bromophenyl phenyl ether | ND | 760 | ug/Kg | 03/05/15 | DD | SW8270D | |
| 4-Chloro-3-methylphenol | ND | 530 | ug/Kg | 03/05/15 | DD | SW8270D | |
| 4-Chloroaniline | ND | 530 | ug/Kg | 03/05/15 | DD | SW8270D | |
| 4-Chlorophenyl phenyl ether | ND | 530 | ug/Kg | 03/05/15 | DD | SW8270D | |
| 4-Nitroaniline | ND | 1200 | ug/Kg | 03/05/15 | DD | SW8270D | |
| 4-Nitrophenol | ND | 2200 | ug/Kg | 03/05/15 | DD | SW8270D | |
| Acenaphthene | ND | 530 | ug/Kg | 03/05/15 | DD | SW8270D | |
| Acenaphthylene | ND | 530 | ug/Kg | 03/05/15 | DD | SW8270D | |
| Acetophenone | ND | 530 | ug/Kg | 03/05/15 | DD | SW8270D | |
| Anthracene | ND | 530 | ug/Kg | 03/05/15 | DD | SW8270D | |
| Atrazine | ND | 530 | ug/Kg | 03/05/15 | DD | SW8270D | |
| Benz(a)anthracene | 1200 | 530 | ug/Kg | 03/05/15 | DD | SW8270D | |
| Benzaldehyde | ND | 530 | ug/Kg | 03/05/15 | DD | SW8270D | |
| Benzo(a)pyrene | 1200 | 530 | ug/Kg | 03/05/15 | DD | SW8270D | |
| Benzo(b)fluoranthene | 1500 | 530 | ug/Kg | 03/05/15 | DD | SW8270D | |
| Benzo(ghi)perylene | ND | 530 | ug/Kg | 03/05/15 | DD | SW8270D | |
| Benzo(k)fluoranthene | 600 | 530 | ug/Kg | 03/05/15 | DD | SW8270D | |
| Benzyl butyl phthalate | ND | 530 | ug/Kg | 03/05/15 | DD | SW8270D | |
| Bis(2-chloroethoxy)methane | ND | 530 | ug/Kg | 03/05/15 | DD | SW8270D | |
| Bis(2-chloroethyl)ether | ND | 760 | ug/Kg | 03/05/15 | DD | SW8270D | |
| Bis(2-chloroisopropyl)ether | ND | 530 | ug/Kg | 03/05/15 | DD | SW8270D | 1 |
| Bis(2-ethylhexyl)phthalate | 770 | 530 | ug/Kg | 03/05/15 | DD | SW8270D | |
| Caprolactam | ND | 530 | ug/Kg | 03/05/15 | DD | SW8270D | |
| Carbazole | ND | 2200 | ug/Kg | 03/05/15 | DD | SW8270D | |
| Chrysene | 1200 | 530 | ug/Kg | 03/05/15 | DD | SW8270D | |
| Dibenz(a,h)anthracene | ND | 330 | ug/Kg | 03/05/15 | DD | SW8270D | |
| Dibenzofuran | ND | 530 | ug/Kg | 03/05/15 | DD | SW8270D | |
| Diethyl phthalate | ND | 530 | ug/Kg | 03/05/15 | DD | SW8270D | |
| Dimethylphthalate | ND | 530 | ug/Kg | 03/05/15 | DD | SW8270D | |
| Di-n-butylphthalate | ND | 530 | ug/Kg | 03/05/15 | DD | SW8270D | |
| Di-n-octylphthalate | ND | 530 | ug/Kg | 03/05/15 | DD | SW8270D | |
| Fluoranthene | 1900 | 530 | ug/Kg | 03/05/15 | DD | SW8270D | |
| Fluorene | ND | 530 | ug/Kg | 03/05/15 | DD | SW8270D | |
| Hexachlorobenzene | ND | 530 | ug/Kg | 03/05/15 | DD | SW8270D | |
| Hexachlorobutadiene | ND | 530 | ug/Kg | 03/05/15 | DD | SW8270D | |
| Hexachlorocyclopentadiene | ND | 530 | ug/Kg | 03/05/15 | DD | SW8270D | |
| Hexachloroethane | ND | 530 | ug/Kg | 03/05/15 | DD | SW8270D | |
| Indeno(1,2,3-cd)pyrene | ND | 500 | ug/Kg | 03/05/15 | DD | SW8270D | |
| Isophorone | ND | 530 | ug/Kg | 03/05/15 | DD | SW8270D | |
| Naphthalene | ND | 530 | ug/Kg | 03/05/15 | DD | SW8270D | |
| Nitrobenzene | ND | 530 | ug/Kg | 03/05/15 | DD | SW8270D | |
| N-Nitrosodimethylamine | ND | 760 | ug/Kg | 03/05/15 | DD | SW8270D | |
| N-Nitrosodi-n-propylamine | ND | 530 | ug/Kg | 03/05/15 | DD | SW8270D | |
| N-Nitrosodiphenylamine | ND | 760 | ug/Kg | 03/05/15 | DD | SW8270D | |
| Pentachlorophenol | ND | 760 | ug/Kg | 03/05/15 | DD | SW8270D | |
| Phenanthrene | 1700 | 530 | ug/Kg | 03/05/15 | DD | SW8270D | |
| Phenol | ND | 330 | ug/Kg | 03/05/15 | DD | SW8270D | |
| Pyrene | 1600 | 530 | ug/Kg | 03/05/15 | DD | SW8270D | |

Project ID: 109 MARBLEDALE RD., TUCKAHOE, NY
Client ID: TB-9 (2-4)

Phoenix I.D.: BH79486

| Parameter | Result | RL/ PQL | Units | Date/Time | By | Reference |
|---|---|---|---|---|---|---|
| **QA/QC Surrogates** | | | | | | |
| % 2,4,6-Tribromophenol | 81 | | % | 03/05/15 | DD | 30 - 130 % |
| % 2-Fluorobiphenyl | 74 | | % | 03/05/15 | DD | 30 - 130 % |
| % 2-Fluorophenol | 66 | | % | 03/05/15 | DD | 30 - 130 % |
| % Nitrobenzene-d5 | 82 | | % | 03/05/15 | DD | 30 - 130 % |
| % Phenol-d5 | 66 | | % | 03/05/15 | DD | 30 - 130 % |
| % Terphenyl-d14 | 61 | | % | 03/05/15 | DD | 30 - 130 % |
| SVOA Library Search Top 15 | Completed | | | 03/06/15 | DD | |

1 = This parameter is not certified by NY NELAC for this matrix. NY NELAC does not offer certification for all parameters at this time.

**RL/PQL=Reporting/Practical Quantitation Level (Equivalent to NELAC LOQ, Limit of Quanitation) ND=Not Detected BRL=Below Reporting Level**

## Comments:

Please be advised that the NY 375 soil criteria for chromium are based on hexavalent chromium and trivalent chromium.

Semi-Volatile Comment:
Due to a matrix interference and/or the presence of a large amount of non-target material in the sample, a dilution was required resulting in an elevated RL for the semivolatile analysis.

All soils, solids and sludges are reported on a dry weight basis unless otherwise noted in the sample comments.

If there are any questions regarding this data, please call Phoenix Client Services at extension 200.
This report must not be reproduced except in full as defined by the attached chain of custody.

**Phyllis Shiller, Laboratory Director**
**March 16, 2015**
**Reviewed and Released by: Phyllis Shiller, Laboratory Director**

PHOENIX

Environmental Laboratories, Inc.
587 East Middle Turnpike, P.O.Box 370, Manchester, CT 06045
Tel. (860) 645-1102 Fax (860) 645-0823

ACCREDITED IN ACCORDANCE WITH nelac NY # 11301

# Analysis Report

March 16, 2015

FOR: Attn: Mr. Tim Carr
HydroEnvironmental Solutions, Inc.
One Deans Bridge Rd
Somers NY 10589

| Sample Information | | Custody Information | | Date | Time |
|---|---|---|---|---|---|
| Matrix: | SOIL | Collected by: | | 03/02/15 | 12:00 |
| Location Code: | HESNY-TUCK | Received by: | LB | 03/04/15 | 16:20 |
| Rush Request: | 72 Hour | Analyzed by: | see "By" below | | |
| P.O.#: | | | | | |

## Laboratory Data

SDG ID: GBH79483
Phoenix ID: BH79487

Project ID: 109 MARBLEDALE RD., TUCKAHOE, NY
Client ID: TB-9 (7-9)

| Parameter | Result | RL/ PQL | Units | Date/Time | By | Reference |
|---|---|---|---|---|---|---|
| Silver | < 0.40 | 0.40 | mg/Kg | 03/05/15 | LK | SW6010C |
| Aluminum | 8160 | 60 | mg/Kg | 03/05/15 | LK | SW6010C |
| Arsenic | 4.0 | 0.8 | mg/Kg | 03/05/15 | LK | SW6010C |
| Barium | 57.9 | 0.40 | mg/Kg | 03/05/15 | LK | SW6010C |
| Beryllium | < 0.32 | 0.32 | mg/Kg | 03/05/15 | LK | SW6010C |
| Calcium | 62400 | 60 | mg/Kg | 03/05/15 | LK | SW6010C |
| Cadmium | < 0.40 | 0.40 | mg/Kg | 03/05/15 | LK | SW6010C |
| Cobalt | 7.28 | 0.40 | mg/Kg | 03/05/15 | LK | SW6010C |
| Chromium | 26.0 | 0.40 | mg/Kg | 03/05/15 | LK | SW6010C |
| Copper | 28.0 | 0.40 | mg/kg | 03/05/15 | LK | SW6010C |
| Iron | 13600 | 60 | mg/Kg | 03/05/15 | LK | SW6010C |
| Mercury | 0.05 | 0.03 | mg/Kg | 03/05/15 | MA | SW7471B |
| Potassium | 1860 | 6.0 | mg/Kg | 03/05/15 | LK | SW6010C |
| Magnesium | 30000 | 60 | mg/Kg | 03/05/15 | LK | SW6010C |
| Manganese | 208 | 4.0 | mg/Kg | 03/05/15 | LK | SW6010C |
| Sodium | 321 | 6.0 | mg/Kg | 03/05/15 | LK | SW6010C |
| Nickel | 16.3 | 0.40 | mg/Kg | 03/05/15 | LK | SW6010C |
| Lead | 40.6 | 0.40 | mg/Kg | 03/05/15 | LK | SW6010C |
| Antimony | < 4.0 | 4.0 | mg/Kg | 03/05/15 | LK | SW6010C |
| Selenium | < 1.6 | 1.6 | mg/Kg | 03/05/15 | LK | SW6010C |
| Thallium | < 3.6 | 3.6 | mg/Kg | 03/05/15 | LK | SW6010C |
| Vanadium | 36.5 | 0.40 | mg/Kg | 03/05/15 | LK | SW6010C |
| Zinc | 48.1 | 0.40 | mg/Kg | 03/05/15 | LK | SW6010C |
| Percent Solid | 86 | | % | 03/04/15 | I | SW846-%Solid |
| Total Cyanide | < 0.58 | 0.58 | mg/Kg | 03/04/15 | O/B/E | SW9012B |
| Soil Extraction for PCB | Completed | | | 03/04/15 | CC/H | SW3545A |
| Soil Extraction for SVOA | Completed | | | 03/04/15 | JJ/VH | SW3545A |
| Mercury Digestion | Completed | | | 03/05/15 | I/I | SW7471B |

Project ID: 109 MARBLEDALE RD., TUCKAHOE, NY
Client ID: TB-9 (7-9)

Phoenix I.D.: BH79487

| Parameter | Result | RL/ PQL | Units | Date/Time | By | Reference |
|---|---|---|---|---|---|---|
| Total Metals Digest | Completed | | | 03/04/15 | CB/AG | SW3050B |
| **Polychlorinated Biphenyls** | | | | | | |
| PCB-1016 | ND | 77 | ug/Kg | 03/05/15 | KCA | SW8082A |
| PCB-1221 | ND | 77 | ug/Kg | 03/05/15 | KCA | SW8082A |
| PCB-1232 | ND | 77 | ug/Kg | 03/05/15 | KCA | SW8082A |
| PCB-1242 | ND | 77 | ug/Kg | 03/05/15 | KCA | SW8082A |
| PCB-1248 | ND | 77 | ug/Kg | 03/05/15 | KCA | SW8082A |
| PCB-1254 | ND | 77 | ug/Kg | 03/05/15 | KCA | SW8082A |
| PCB-1260 | ND | 77 | ug/Kg | 03/05/15 | KCA | SW8082A |
| PCB-1262 | ND | 77 | ug/Kg | 03/05/15 | KCA | SW8082A |
| PCB-1268 | ND | 77 | ug/Kg | 03/05/15 | KCA | SW8082A |
| **QA/QC Surrogates** | | | | | | |
| % DCBP | 64 | | % | 03/05/15 | KCA | 30 - 150 % |
| % TCMX | 69 | | % | 03/05/15 | KCA | 30 - 150 % |
| **Volatiles (TCL)** | | | | | | |
| 1,1,1-Trichloroethane | ND | 8.1 | ug/kg | 03/05/15 | JLI | SW8260C |
| 1,1,2,2-Tetrachloroethane | ND | 8.1 | ug/kg | 03/05/15 | JLI | SW8260C |
| 1,1,2-Trichloroethane | ND | 8.1 | ug/kg | 03/05/15 | JLI | SW8260C |
| 1,1-Dichloroethane | ND | 8.1 | ug/kg | 03/05/15 | JLI | SW8260C |
| 1,1-Dichloroethene | ND | 8.1 | ug/kg | 03/05/15 | JLI | SW8260C |
| 1,2,3-Trichlorobenzene | ND | 360 | ug/kg | 03/05/15 | JLI | SW8260C |
| 1,2,4-Trichlorobenzene | ND | 360 | ug/kg | 03/05/15 | JLI | SW8260C |
| 1,2-Dibromo-3-chloropropane | ND | 360 | ug/kg | 03/05/15 | JLI | SW8260C |
| 1,2-Dibromoethane | ND | 8.1 | ug/kg | 03/05/15 | JLI | SW8260C |
| 1,2-Dichlorobenzene | ND | 360 | ug/kg | 03/05/15 | JLI | SW8260C |
| 1,2-Dichloroethane | ND | 8.1 | ug/kg | 03/05/15 | JLI | SW8260C |
| 1,2-Dichloropropane | ND | 8.1 | ug/kg | 03/05/15 | JLI | SW8260C |
| 1,3-Dichlorobenzene | ND | 360 | ug/kg | 03/05/15 | JLI | SW8260C |
| 1,4-Dichlorobenzene | ND | 360 | ug/kg | 03/05/15 | JLI | SW8260C |
| 2-Hexanone | ND | 41 | ug/kg | 03/05/15 | JLI | SW8260C |
| 4-Methyl-2-pentanone | ND | 41 | ug/kg | 03/05/15 | JLI | SW8260C |
| Acetone | 61 | 81 | ug/kg | 03/05/15 | JLI | SW8260C |
| Benzene | 6.9 | 8.1 | ug/kg | 03/05/15 | JLI | SW8260C |
| Bromochloromethane | ND | 8.1 | ug/kg | 03/05/15 | JLI | SW8260C |
| Bromodichloromethane | ND | 8.1 | ug/kg | 03/05/15 | JLI | SW8260C |
| Bromoform | ND | 8.1 | ug/kg | 03/05/15 | JLI | SW8260C |
| Bromomethane | ND | 8.1 | ug/kg | 03/05/15 | JLI | SW8260C |
| Carbon Disulfide | ND | 8.1 | ug/kg | 03/05/15 | JLI | SW8260C |
| Carbon tetrachloride | ND | 8.1 | ug/kg | 03/05/15 | JLI | SW8260C |
| Chlorobenzene | ND | 20 | ug/kg | 03/05/15 | JLI | SW8260C |
| Chloroethane | ND | 8.1 | ug/kg | 03/05/15 | JLI | SW8260C |
| Chloroform | ND | 8.1 | ug/kg | 03/05/15 | JLI | SW8260C |
| Chloromethane | ND | 8.1 | ug/kg | 03/05/15 | JLI | SW8260C |
| cis-1,2-Dichloroethene | ND | 8.1 | ug/kg | 03/05/15 | JLI | SW8260C |
| cis-1,3-Dichloropropene | ND | 8.1 | ug/kg | 03/05/15 | JLI | SW8260C |
| Cyclohexane | ND | 8.1 | ug/kg | 03/05/15 | JLI | SW8260C |
| Dibromochloromethane | ND | 8.1 | ug/kg | 03/05/15 | JLI | SW8260C |
| Dichlorodifluoromethane | ND | 8.1 | ug/kg | 03/05/15 | JLI | SW8260C |

Project ID: 109 MARBLEDALE RD., TUCKAHOE, NY
Client ID: TB-9 (7-9)

Phoenix I.D.: BH79487

| Parameter | Result | RL/ PQL | Units | Date/Time | By | Reference |
|---|---|---|---|---|---|---|
| Ethylbenzene | ND | 8.1 | ug/kg | 03/05/15 | JLI | SW8260C |
| Isopropylbenzene | ND | 360 | ug/kg | 03/05/15 | JLI | SW8260C |
| m&p-Xylene | ND | 8.1 | ug/kg | 03/05/15 | JLI | SW8260C |
| Methyl ethyl ketone | ND | 49 | ug/kg | 03/05/15 | JLI | SW8260C |
| Methyl t-butyl ether (MTBE) | ND | 16 | ug/kg | 03/05/15 | JLI | SW8260C |
| Methylacetate | ND | 6.5 | ug/kg | 03/05/15 | JLI | SW8260C |
| Methylcyclohexane | ND | 8.1 | ug/kg | 03/05/15 | JLI | SW8260C |
| Methylene chloride | ND | 8.1 | ug/kg | 03/05/15 | JLI | SW8260C |
| o-Xylene | ND | 8.1 | ug/kg | 03/05/15 | JLI | SW8260C |
| Styrene | ND | 8.1 | ug/kg | 03/05/15 | JLI | SW8260C |
| Tetrachloroethene | ND | 8.1 | ug/kg | 03/05/15 | JLI | SW8260C |
| Toluene | ND | 8.1 | ug/kg | 03/05/15 | JLI | SW8260C |
| Total Xylenes | ND | 8.1 | ug/kg | 03/05/15 | JLI | SW8260C |
| trans-1,2-Dichloroethene | ND | 8.1 | ug/kg | 03/05/15 | JLI | SW8260C |
| trans-1,3-Dichloropropene | ND | 8.1 | ug/kg | 03/05/15 | JLI | SW8260C |
| Trichloroethene | ND | 8.1 | ug/kg | 03/05/15 | JLI | SW8260C |
| Trichlorofluoromethane | ND | 8.1 | ug/kg | 03/05/15 | JLI | SW8260C |
| Trichlorotrifluoroethane | ND | 8.1 | ug/kg | 03/05/15 | JLI | SW8260C |
| Vinyl chloride | ND | 8.1 | ug/kg | 03/05/15 | JLI | SW8260C |
| **QA/QC Surrogates** | | | | | | |
| % 1,2-dichlorobenzene-d4 | 96 | | % | 03/05/15 | JLI | 70 - 130 % |
| % Bromofluorobenzene | 104 | | % | 03/05/15 | JLI | 70 - 130 % |
| % Dibromofluoromethane | 82 | | % | 03/05/15 | JLI | 70 - 130 % |
| % Toluene-d8 | 83 | | % | 03/05/15 | JLI | 70 - 130 % |
| **1,4-dioxane** | | | | | | |
| 1,4-dioxane | ND | 100 | ug/kg | 03/05/15 | JLI | SW8260C |
| Volatile Library Search Top 10 | Completed | | | 03/05/15 | JLI | |
| **Semivolatiles** | | | | | | |
| 1,1-Biphenyl | ND | 530 | ug/Kg | 03/05/15 | DD | SW8270D |
| 1,2,4,5-Tetrachlorobenzene | ND | 530 | ug/Kg | 03/05/15 | DD | SW8270D |
| 2,3,4,6-tetrachlorophenol | ND | 530 | ug/Kg | 03/05/15 | DD | SW8270D |
| 2,4,5-Trichlorophenol | ND | 530 | ug/Kg | 03/05/15 | DD | SW8270D |
| 2,4,6-Trichlorophenol | ND | 530 | ug/Kg | 03/05/15 | DD | SW8270D |
| 2,4-Dichlorophenol | ND | 530 | ug/Kg | 03/05/15 | DD | SW8270D |
| 2,4-Dimethylphenol | ND | 530 | ug/Kg | 03/05/15 | DD | SW8270D |
| 2,4-Dinitrophenol | ND | 1200 | ug/Kg | 03/05/15 | DD | SW8270D |
| 2,4-Dinitrotoluene | ND | 530 | ug/Kg | 03/05/15 | DD | SW8270D |
| 2,6-Dinitrotoluene | ND | 530 | ug/Kg | 03/05/15 | DD | SW8270D |
| 2-Chloronaphthalene | ND | 530 | ug/Kg | 03/05/15 | DD | SW8270D |
| 2-Chlorophenol | ND | 530 | ug/Kg | 03/05/15 | DD | SW8270D |
| 2-Methylnaphthalene | ND | 530 | ug/Kg | 03/05/15 | DD | SW8270D |
| 2-Methylphenol (o-cresol) | ND | 330 | ug/Kg | 03/05/15 | DD | SW8270D |
| 2-Nitroaniline | ND | 1200 | ug/Kg | 03/05/15 | DD | SW8270D |
| 2-Nitrophenol | ND | 530 | ug/Kg | 03/05/15 | DD | SW8270D |
| 3&4-Methylphenol (m&p-cresol) | ND | 760 | ug/Kg | 03/05/15 | DD | SW8270D 1 |
| 3,3'-Dichlorobenzidine | ND | 910 | ug/Kg | 03/05/15 | DD | SW8270D |
| 3-Nitroaniline | ND | 1200 | ug/Kg | 03/05/15 | DD | SW8270D |

Project ID: 109 MARBLEDALE RD., TUCKAHOE, NY
Client ID: TB-9 (7-9)

Phoenix I.D.: BH79487

| Parameter | Result | RL/ PQL | Units | Date/Time | By | Reference | |
|---|---|---|---|---|---|---|---|
| 4,6-Dinitro-2-methylphenol | ND | 2200 | ug/Kg | 03/05/15 | DD | SW8270D | |
| 4-Bromophenyl phenyl ether | ND | 760 | ug/Kg | 03/05/15 | DD | SW8270D | |
| 4-Chloro-3-methylphenol | ND | 530 | ug/Kg | 03/05/15 | DD | SW8270D | |
| 4-Chloroaniline | ND | 530 | ug/Kg | 03/05/15 | DD | SW8270D | |
| 4-Chlorophenyl phenyl ether | ND | 530 | ug/Kg | 03/05/15 | DD | SW8270D | |
| 4-Nitroaniline | ND | 1200 | ug/Kg | 03/05/15 | DD | SW8270D | |
| 4-Nitrophenol | ND | 2200 | ug/Kg | 03/05/15 | DD | SW8270D | |
| Acenaphthene | ND | 530 | ug/Kg | 03/05/15 | DD | SW8270D | |
| Acenaphthylene | ND | 530 | ug/Kg | 03/05/15 | DD | SW8270D | |
| Acetophenone | ND | 530 | ug/Kg | 03/05/15 | DD | SW8270D | |
| Anthracene | 1100 | 530 | ug/Kg | 03/05/15 | DD | SW8270D | |
| Atrazine | ND | 530 | ug/Kg | 03/05/15 | DD | SW8270D | |
| Benz(a)anthracene | 2200 | 530 | ug/Kg | 03/05/15 | DD | SW8270D | |
| Benzaldehyde | ND | 530 | ug/Kg | 03/05/15 | DD | SW8270D | |
| Benzo(a)pyrene | 2000 | 530 | ug/Kg | 03/05/15 | DD | SW8270D | |
| Benzo(b)fluoranthene | 2900 | 530 | ug/Kg | 03/05/15 | DD | SW8270D | |
| Benzo(ghi)perylene | ND | 530 | ug/Kg | 03/05/15 | DD | SW8270D | |
| Benzo(k)fluoranthene | 1100 | 530 | ug/Kg | 03/05/15 | DD | SW8270D | |
| Benzyl butyl phthalate | ND | 530 | ug/Kg | 03/05/15 | DD | SW8270D | |
| Bis(2-chloroethoxy)methane | ND | 530 | ug/Kg | 03/05/15 | DD | SW8270D | |
| Bis(2-chloroethyl)ether | ND | 760 | ug/Kg | 03/05/15 | DD | SW8270D | |
| Bis(2-chloroisopropyl)ether | ND | 530 | ug/Kg | 03/05/15 | DD | SW8270D | 1 |
| Bis(2-ethylhexyl)phthalate | ND | 530 | ug/Kg | 03/05/15 | DD | SW8270D | |
| Caprolactam | ND | 530 | ug/Kg | 03/05/15 | DD | SW8270D | |
| Carbazole | ND | 2200 | ug/Kg | 03/05/15 | DD | SW8270D | |
| Chrysene | 2300 | 530 | ug/Kg | 03/05/15 | DD | SW8270D | |
| Dibenz(a,h)anthracene | ND | 330 | ug/Kg | 03/05/15 | DD | SW8270D | |
| Dibenzofuran | ND | 530 | ug/Kg | 03/05/15 | DD | SW8270D | |
| Diethyl phthalate | ND | 530 | ug/Kg | 03/05/15 | DD | SW8270D | |
| Dimethylphthalate | ND | 530 | ug/Kg | 03/05/15 | DD | SW8270D | |
| Di-n-butylphthalate | ND | 530 | ug/Kg | 03/05/15 | DD | SW8270D | |
| Di-n-octylphthalate | ND | 530 | ug/Kg | 03/05/15 | DD | SW8270D | |
| Fluoranthene | 3700 | 530 | ug/Kg | 03/05/15 | DD | SW8270D | |
| Fluorene | ND | 530 | ug/Kg | 03/05/15 | DD | SW8270D | |
| Hexachlorobenzene | ND | 530 | ug/Kg | 03/05/15 | DD | SW8270D | |
| Hexachlorobutadiene | ND | 530 | ug/Kg | 03/05/15 | DD | SW8270D | |
| Hexachlorocyclopentadiene | ND | 530 | ug/Kg | 03/05/15 | DD | SW8270D | |
| Hexachloroethane | ND | 530 | ug/Kg | 03/05/15 | DD | SW8270D | |
| Indeno(1,2,3-cd)pyrene | ND | 500 | ug/Kg | 03/05/15 | DD | SW8270D | |
| Isophorone | ND | 530 | ug/Kg | 03/05/15 | DD | SW8270D | |
| Naphthalene | ND | 530 | ug/Kg | 03/05/15 | DD | SW8270D | |
| Nitrobenzene | ND | 530 | ug/Kg | 03/05/15 | DD | SW8270D | |
| N-Nitrosodimethylamine | ND | 760 | ug/Kg | 03/05/15 | DD | SW8270D | |
| N-Nitrosodi-n-propylamine | ND | 530 | ug/Kg | 03/05/15 | DD | SW8270D | |
| N-Nitrosodiphenylamine | ND | 760 | ug/Kg | 03/05/15 | DD | SW8270D | |
| Pentachlorophenol | ND | 760 | ug/Kg | 03/05/15 | DD | SW8270D | |
| Phenanthrene | 3600 | 530 | ug/Kg | 03/05/15 | DD | SW8270D | |
| Phenol | ND | 330 | ug/Kg | 03/05/15 | DD | SW8270D | |
| Pyrene | 3000 | 530 | ug/Kg | 03/05/15 | DD | SW8270D | |

Project ID: 109 MARBLEDALE RD., TUCKAHOE, NY
Client ID: TB-9 (7-9)

Phoenix I.D.: BH79487

| Parameter | Result | RL/ PQL | Units | Date/Time | By | Reference |
|---|---|---|---|---|---|---|
| **QA/QC Surrogates** | | | | | | |
| % 2,4,6-Tribromophenol | 68 | | % | 03/05/15 | DD | 30 - 130 % |
| % 2-Fluorobiphenyl | 75 | | % | 03/05/15 | DD | 30 - 130 % |
| % 2-Fluorophenol | 64 | | % | 03/05/15 | DD | 30 - 130 % |
| % Nitrobenzene-d5 | 81 | | % | 03/05/15 | DD | 30 - 130 % |
| % Phenol-d5 | 65 | | % | 03/05/15 | DD | 30 - 130 % |
| % Terphenyl-d14 | 59 | | % | 03/05/15 | DD | 30 - 130 % |
| SVOA Library Search Top 15 | Completed | | | 03/06/15 | DD | |

1 = This parameter is not certified by NY NELAC for this matrix. NY NELAC does not offer certification for all parameters at this time.

**RL/PQL=Reporting/Practical Quantitation Level (Equivalent to NELAC LOQ, Limit of Quanitation) ND=Not Detected BRL=Below Reporting Level**

## Comments:

Please be advised that the NY 375 soil criteria for chromium are based on hexavalent chromium and trivalent chromium.

Volatile Comment:
There was a suppression of the last internal standard in the low level analysis, all affected compounds are reported from the methanol preserved high level analysis which did not exhibit this interference.

Semi-Volatile Comment:
Due to a matrix interference and/or the presence of a large amount of non-target material in the sample, a dilution was required resulting in an elevated RL for the semivolatile analysis.

All soils, solids and sludges are reported on a dry weight basis unless otherwise noted in the sample comments.

If there are any questions regarding this data, please call Phoenix Client Services at extension 200.
This report must not be reproduced except in full as defined by the attached chain of custody.

**Phyllis Shiller, Laboratory Director**
**March 16, 2015**
**Reviewed and Released by: Phyllis Shiller, Laboratory Director**

PHOENIX

Environmental Laboratories, Inc.
587 East Middle Turnpike, P.O.Box 370, Manchester, CT 06045
Tel. (860) 645-1102 Fax (860) 645-0823

ACCREDITED IN ACCORDANCE WITH nelac NY # 11301

# Analysis Report

March 16, 2015

FOR: Attn: Mr. Tim Carr
HydroEnvironmental Solutions, Inc.
One Deans Bridge Rd
Somers NY 10589

| Sample Information | | Custody Information | | Date | Time |
|---|---|---|---|---|---|
| Matrix: | SOIL | Collected by: | | 03/02/15 | 15:00 |
| Location Code: | HESNY-TUCK | Received by: | LB | 03/04/15 | 16:20 |
| Rush Request: | 72 Hour | Analyzed by: | see "By" below | | |
| P.O.#: | | | | | |

## Laboratory Data

SDG ID: GBH79483
Phoenix ID: BH79488

Project ID: 109 MARBLEDALE RD., TUCKAHOE, NY
Client ID: TB-10 (4-6)

| Parameter | Result | RL/ PQL | Units | Date/Time | By | Reference |
|---|---|---|---|---|---|---|
| Silver | < 0.35 | 0.35 | mg/Kg | 03/05/15 | LK | SW6010C |
| Aluminum | 11200 | 53 | mg/Kg | 03/05/15 | LK | SW6010C |
| Arsenic | 3.3 | 0.7 | mg/Kg | 03/05/15 | LK | SW6010C |
| Barium | 73.8 | 0.35 | mg/Kg | 03/05/15 | LK | SW6010C |
| Beryllium | 0.32 | 0.28 | mg/Kg | 03/05/15 | LK | SW6010C |
| Calcium | 24800 | 53 | mg/Kg | 03/05/15 | LK | SW6010C |
| Cadmium | < 0.35 | 0.35 | mg/Kg | 03/05/15 | LK | SW6010C |
| Cobalt | 11.4 | 0.35 | mg/Kg | 03/05/15 | LK | SW6010C |
| Chromium | 24.8 | 0.35 | mg/Kg | 03/05/15 | LK | SW6010C |
| Copper | 57.7 | 0.35 | mg/kg | 03/05/15 | LK | SW6010C |
| Iron | 20700 | 53 | mg/Kg | 03/05/15 | LK | SW6010C |
| Mercury | 0.28 | 0.03 | mg/Kg | 03/05/15 | MA | SW7471B |
| Potassium | 3160 | 5.3 | mg/Kg | 03/05/15 | LK | SW6010C |
| Magnesium | 14500 | 53 | mg/Kg | 03/05/15 | LK | SW6010C |
| Manganese | 349 | 3.5 | mg/Kg | 03/05/15 | LK | SW6010C |
| Sodium | 293 | 5.3 | mg/Kg | 03/05/15 | LK | SW6010C |
| Nickel | 19.0 | 0.35 | mg/Kg | 03/05/15 | LK | SW6010C |
| Lead | 49.3 | 0.35 | mg/Kg | 03/05/15 | LK | SW6010C |
| Antimony | < 3.5 | 3.5 | mg/Kg | 03/05/15 | LK | SW6010C |
| Selenium | < 1.4 | 1.4 | mg/Kg | 03/05/15 | LK | SW6010C |
| Thallium | < 3.2 | 3.2 | mg/Kg | 03/05/15 | LK | SW6010C |
| Vanadium | 37.5 | 0.35 | mg/Kg | 03/05/15 | LK | SW6010C |
| Zinc | 70.8 | 0.35 | mg/Kg | 03/05/15 | LK | SW6010C |
| Percent Solid | 87 | | % | 03/04/15 | I | SW846-%Solid |
| Total Cyanide | < 0.57 | 0.57 | mg/Kg | 03/04/15 | O/B/E | SW9012B |
| Soil Extraction for PCB | Completed | | | 03/04/15 | CC/H | SW3545A |
| Soil Extraction for SVOA | Completed | | | 03/04/15 | JJ/VH | SW3545A |
| Mercury Digestion | Completed | | | 03/05/15 | I/I | SW7471B |

Project ID: 109 MARBLEDALE RD., TUCKAHOE, NY
Client ID: TB-10 (4-6)

Phoenix I.D.: BH79488

| Parameter | Result | RL/ PQL | Units | Date/Time | By | Reference |
|---|---|---|---|---|---|---|
| Total Metals Digest | Completed | | | 03/04/15 | CB/AG | SW3050B |
| **Polychlorinated Biphenyls** | | | | | | |
| PCB-1016 | ND | 76 | ug/Kg | 03/06/15 | AW | SW8082A |
| PCB-1221 | ND | 76 | ug/Kg | 03/06/15 | AW | SW8082A |
| PCB-1232 | ND | 76 | ug/Kg | 03/06/15 | AW | SW8082A |
| PCB-1242 | ND | 76 | ug/Kg | 03/06/15 | AW | SW8082A |
| PCB-1248 | ND | 76 | ug/Kg | 03/06/15 | AW | SW8082A |
| PCB-1254 | ND | 76 | ug/Kg | 03/06/15 | AW | SW8082A |
| PCB-1260 | 190 | 76 | ug/Kg | 03/06/15 | AW | SW8082A |
| PCB-1262 | ND | 76 | ug/Kg | 03/06/15 | AW | SW8082A |
| PCB-1268 | ND | 76 | ug/Kg | 03/06/15 | AW | SW8082A |
| **QA/QC Surrogates** | | | | | | |
| % DCBP | 64 | | % | 03/06/15 | AW | 30 - 150 % |
| % TCMX | 63 | | % | 03/06/15 | AW | 30 - 150 % |
| **Volatiles (TCL)** | | | | | | |
| 1,1,1-Trichloroethane | ND | 8.1 | ug/kg | 03/05/15 | JLI | SW8260C |
| 1,1,2,2-Tetrachloroethane | ND | 8.1 | ug/kg | 03/05/15 | JLI | SW8260C |
| 1,1,2-Trichloroethane | ND | 8.1 | ug/kg | 03/05/15 | JLI | SW8260C |
| 1,1-Dichloroethane | ND | 8.1 | ug/kg | 03/05/15 | JLI | SW8260C |
| 1,1-Dichloroethene | ND | 8.1 | ug/kg | 03/05/15 | JLI | SW8260C |
| 1,2,3-Trichlorobenzene | ND | 360 | ug/kg | 03/05/15 | JLI | SW8260C |
| 1,2,4-Trichlorobenzene | ND | 360 | ug/kg | 03/05/15 | JLI | SW8260C |
| 1,2-Dibromo-3-chloropropane | ND | 360 | ug/kg | 03/05/15 | JLI | SW8260C |
| 1,2-Dibromoethane | ND | 8.1 | ug/kg | 03/05/15 | JLI | SW8260C |
| 1,2-Dichlorobenzene | ND | 360 | ug/kg | 03/05/15 | JLI | SW8260C |
| 1,2-Dichloroethane | ND | 8.1 | ug/kg | 03/05/15 | JLI | SW8260C |
| 1,2-Dichloropropane | ND | 8.1 | ug/kg | 03/05/15 | JLI | SW8260C |
| 1,3-Dichlorobenzene | ND | 360 | ug/kg | 03/05/15 | JLI | SW8260C |
| 1,4-Dichlorobenzene | ND | 360 | ug/kg | 03/05/15 | JLI | SW8260C |
| 2-Hexanone | ND | 41 | ug/kg | 03/05/15 | JLI | SW8260C |
| 4-Methyl-2-pentanone | ND | 41 | ug/kg | 03/05/15 | JLI | SW8260C |
| Acetone | ND | 50 | ug/kg | 03/05/15 | JLI | SW8260C |
| Benzene | 5.9 | 8.1 | ug/kg | 03/05/15 | JLI | SW8260C |
| Bromochloromethane | ND | 8.1 | ug/kg | 03/05/15 | JLI | SW8260C |
| Bromodichloromethane | ND | 8.1 | ug/kg | 03/05/15 | JLI | SW8260C |
| Bromoform | ND | 8.1 | ug/kg | 03/05/15 | JLI | SW8260C |
| Bromomethane | ND | 8.1 | ug/kg | 03/05/15 | JLI | SW8260C |
| Carbon Disulfide | ND | 8.1 | ug/kg | 03/05/15 | JLI | SW8260C |
| Carbon tetrachloride | ND | 8.1 | ug/kg | 03/05/15 | JLI | SW8260C |
| Chlorobenzene | ND | 20 | ug/kg | 03/05/15 | JLI | SW8260C |
| Chloroethane | ND | 8.1 | ug/kg | 03/05/15 | JLI | SW8260C |
| Chloroform | ND | 8.1 | ug/kg | 03/05/15 | JLI | SW8260C |
| Chloromethane | ND | 8.1 | ug/kg | 03/05/15 | JLI | SW8260C |
| cis-1,2-Dichloroethene | ND | 8.1 | ug/kg | 03/05/15 | JLI | SW8260C |
| cis-1,3-Dichloropropene | ND | 8.1 | ug/kg | 03/05/15 | JLI | SW8260C |
| Cyclohexane | ND | 8.1 | ug/kg | 03/05/15 | JLI | SW8260C |
| Dibromochloromethane | ND | 8.1 | ug/kg | 03/05/15 | JLI | SW8260C |
| Dichlorodifluoromethane | ND | 8.1 | ug/kg | 03/05/15 | JLI | SW8260C |

Project ID: 109 MARBLEDALE RD., TUCKAHOE, NY
Client ID: TB-10 (4-6)

Phoenix I.D.: BH79488

| Parameter | Result | RL/ PQL | Units | Date/Time | By | Reference |
|---|---|---|---|---|---|---|
| Ethylbenzene | ND | 8.1 | ug/kg | 03/05/15 | JLI | SW8260C |
| Isopropylbenzene | ND | 360 | ug/kg | 03/05/15 | JLI | SW8260C |
| m&p-Xylene | 8.4 | 8.1 | ug/kg | 03/05/15 | JLI | SW8260C |
| Methyl ethyl ketone | ND | 49 | ug/kg | 03/05/15 | JLI | SW8260C |
| Methyl t-butyl ether (MTBE) | ND | 16 | ug/kg | 03/05/15 | JLI | SW8260C |
| Methylacetate | ND | 6.5 | ug/kg | 03/05/15 | JLI | SW8260C |
| Methylcyclohexane | 4.1 | 8.1 | ug/kg | 03/05/15 | JLI | SW8260C |
| Methylene chloride | ND | 8.1 | ug/kg | 03/05/15 | JLI | SW8260C |
| o-Xylene | 5.1 | 8.1 | ug/kg | 03/05/15 | JLI | SW8260C |
| Styrene | ND | 8.1 | ug/kg | 03/05/15 | JLI | SW8260C |
| Tetrachloroethene | ND | 8.1 | ug/kg | 03/05/15 | JLI | SW8260C |
| Toluene | 4.9 | 8.1 | ug/kg | 03/05/15 | JLI | SW8260C |
| Total Xylenes | 13.5 | 8.1 | ug/kg | 03/05/15 | JLI | SW8260C |
| trans-1,2-Dichloroethene | ND | 8.1 | ug/kg | 03/05/15 | JLI | SW8260C |
| trans-1,3-Dichloropropene | ND | 8.1 | ug/kg | 03/05/15 | JLI | SW8260C |
| Trichloroethene | ND | 8.1 | ug/kg | 03/05/15 | JLI | SW8260C |
| Trichlorofluoromethane | ND | 8.1 | ug/kg | 03/05/15 | JLI | SW8260C |
| Trichlorotrifluoroethane | ND | 8.1 | ug/kg | 03/05/15 | JLI | SW8260C |
| Vinyl chloride | ND | 8.1 | ug/kg | 03/05/15 | JLI | SW8260C |
| **QA/QC Surrogates** | | | | | | |
| % 1,2-dichlorobenzene-d4 | 95 | | % | 03/05/15 | JLI | 70 - 130 % |
| % Bromofluorobenzene | 96 | | % | 03/05/15 | JLI | 70 - 130 % |
| % Dibromofluoromethane | 93 | | % | 03/05/15 | JLI | 70 - 130 % |
| % Toluene-d8 | 95 | | % | 03/05/15 | JLI | 70 - 130 % |
| **1,4-dioxane** | | | | | | |
| 1,4-dioxane | ND | 70 | ug/kg | 03/05/15 | JLI | SW8260C |
| Volatile Library Search Top 10 | Completed | | | 03/05/15 | JLI | |
| **Semivolatiles** | | | | | | |
| 1,1-Biphenyl | ND | 1300 | ug/Kg | 03/05/15 | DD | SW8270D |
| 1,2,4,5-Tetrachlorobenzene | ND | 1300 | ug/Kg | 03/05/15 | DD | SW8270D |
| 2,3,4,6-tetrachlorophenol | ND | 1300 | ug/Kg | 03/05/15 | DD | SW8270D |
| 2,4,5-Trichlorophenol | ND | 1300 | ug/Kg | 03/05/15 | DD | SW8270D |
| 2,4,6-Trichlorophenol | ND | 1300 | ug/Kg | 03/05/15 | DD | SW8270D |
| 2,4-Dichlorophenol | ND | 1300 | ug/Kg | 03/05/15 | DD | SW8270D |
| 2,4-Dimethylphenol | ND | 1300 | ug/Kg | 03/05/15 | DD | SW8270D |
| 2,4-Dinitrophenol | ND | 3000 | ug/Kg | 03/05/15 | DD | SW8270D |
| 2,4-Dinitrotoluene | ND | 1300 | ug/Kg | 03/05/15 | DD | SW8270D |
| 2,6-Dinitrotoluene | ND | 1300 | ug/Kg | 03/05/15 | DD | SW8270D |
| 2-Chloronaphthalene | ND | 1300 | ug/Kg | 03/05/15 | DD | SW8270D |
| 2-Chlorophenol | ND | 1300 | ug/Kg | 03/05/15 | DD | SW8270D |
| 2-Methylnaphthalene | ND | 1300 | ug/Kg | 03/05/15 | DD | SW8270D |
| 2-Methylphenol (o-cresol) | ND | 1300 | ug/Kg | 03/05/15 | DD | SW8270D |
| 2-Nitroaniline | ND | 3000 | ug/Kg | 03/05/15 | DD | SW8270D |
| 2-Nitrophenol | ND | 1300 | ug/Kg | 03/05/15 | DD | SW8270D |
| 3&4-Methylphenol (m&p-cresol) | ND | 1900 | ug/Kg | 03/05/15 | DD | SW8270D 1 |
| 3,3'-Dichlorobenzidine | ND | 2300 | ug/Kg | 03/05/15 | DD | SW8270D |
| 3-Nitroaniline | ND | 3000 | ug/Kg | 03/05/15 | DD | SW8270D |

Project ID: 109 MARBLEDALE RD., TUCKAHOE, NY
Client ID: TB-10 (4-6)

Phoenix I.D.: BH79488

| Parameter | Result | RL/ PQL | Units | Date/Time | By | Reference | |
|---|---|---|---|---|---|---|---|
| 4,6-Dinitro-2-methylphenol | ND | 5500 | ug/Kg | 03/05/15 | DD | SW8270D | |
| 4-Bromophenyl phenyl ether | ND | 1900 | ug/Kg | 03/05/15 | DD | SW8270D | |
| 4-Chloro-3-methylphenol | ND | 1300 | ug/Kg | 03/05/15 | DD | SW8270D | |
| 4-Chloroaniline | ND | 1300 | ug/Kg | 03/05/15 | DD | SW8270D | |
| 4-Chlorophenyl phenyl ether | ND | 1300 | ug/Kg | 03/05/15 | DD | SW8270D | |
| 4-Nitroaniline | ND | 3000 | ug/Kg | 03/05/15 | DD | SW8270D | |
| 4-Nitrophenol | ND | 5500 | ug/Kg | 03/05/15 | DD | SW8270D | |
| Acenaphthene | ND | 1300 | ug/Kg | 03/05/15 | DD | SW8270D | |
| Acenaphthylene | ND | 1300 | ug/Kg | 03/05/15 | DD | SW8270D | |
| Acetophenone | ND | 1300 | ug/Kg | 03/05/15 | DD | SW8270D | |
| Anthracene | 2900 | 1300 | ug/Kg | 03/05/15 | DD | SW8270D | |
| Atrazine | ND | 1300 | ug/Kg | 03/05/15 | DD | SW8270D | |
| Benz(a)anthracene | 4500 | 1300 | ug/Kg | 03/05/15 | DD | SW8270D | |
| Benzaldehyde | ND | 1300 | ug/Kg | 03/05/15 | DD | SW8270D | |
| Benzo(a)pyrene | 4000 | 1300 | ug/Kg | 03/05/15 | DD | SW8270D | |
| Benzo(b)fluoranthene | 5900 | 1300 | ug/Kg | 03/05/15 | DD | SW8270D | |
| Benzo(ghi)perylene | ND | 1300 | ug/Kg | 03/05/15 | DD | SW8270D | |
| Benzo(k)fluoranthene | 2300 | 1300 | ug/Kg | 03/05/15 | DD | SW8270D | |
| Benzyl butyl phthalate | ND | 1300 | ug/Kg | 03/05/15 | DD | SW8270D | |
| Bis(2-chloroethoxy)methane | ND | 1300 | ug/Kg | 03/05/15 | DD | SW8270D | |
| Bis(2-chloroethyl)ether | ND | 1900 | ug/Kg | 03/05/15 | DD | SW8270D | |
| Bis(2-chloroisopropyl)ether | ND | 1300 | ug/Kg | 03/05/15 | DD | SW8270D | 1 |
| Bis(2-ethylhexyl)phthalate | ND | 1300 | ug/Kg | 03/05/15 | DD | SW8270D | |
| Caprolactam | ND | 1300 | ug/Kg | 03/05/15 | DD | SW8270D | |
| Carbazole | ND | 5500 | ug/Kg | 03/05/15 | DD | SW8270D | |
| Chrysene | 4800 | 1300 | ug/Kg | 03/05/15 | DD | SW8270D | |
| Dibenz(a,h)anthracene | ND | 1300 | ug/Kg | 03/05/15 | DD | SW8270D | |
| Dibenzofuran | 1400 | 1300 | ug/Kg | 03/05/15 | DD | SW8270D | |
| Diethyl phthalate | ND | 1300 | ug/Kg | 03/05/15 | DD | SW8270D | |
| Dimethylphthalate | ND | 1300 | ug/Kg | 03/05/15 | DD | SW8270D | |
| Di-n-butylphthalate | ND | 1300 | ug/Kg | 03/05/15 | DD | SW8270D | |
| Di-n-octylphthalate | ND | 1300 | ug/Kg | 03/05/15 | DD | SW8270D | |
| Fluoranthene | 8600 | 1300 | ug/Kg | 03/05/15 | DD | SW8270D | |
| Fluorene | 1800 | 1300 | ug/Kg | 03/05/15 | DD | SW8270D | |
| Hexachlorobenzene | ND | 1300 | ug/Kg | 03/05/15 | DD | SW8270D | |
| Hexachlorobutadiene | ND | 1300 | ug/Kg | 03/05/15 | DD | SW8270D | |
| Hexachlorocyclopentadiene | ND | 1300 | ug/Kg | 03/05/15 | DD | SW8270D | |
| Hexachloroethane | ND | 1300 | ug/Kg | 03/05/15 | DD | SW8270D | |
| Indeno(1,2,3-cd)pyrene | ND | 1300 | ug/Kg | 03/05/15 | DD | SW8270D | |
| Isophorone | ND | 1300 | ug/Kg | 03/05/15 | DD | SW8270D | |
| Naphthalene | 2100 | 1300 | ug/Kg | 03/05/15 | DD | SW8270D | |
| Nitrobenzene | ND | 1300 | ug/Kg | 03/05/15 | DD | SW8270D | |
| N-Nitrosodimethylamine | ND | 1900 | ug/Kg | 03/05/15 | DD | SW8270D | |
| N-Nitrosodi-n-propylamine | ND | 1300 | ug/Kg | 03/05/15 | DD | SW8270D | |
| N-Nitrosodiphenylamine | ND | 1900 | ug/Kg | 03/05/15 | DD | SW8270D | |
| Pentachlorophenol | ND | 800 | ug/Kg | 03/05/15 | DD | SW8270D | |
| Phenanthrene | 10000 | 1300 | ug/Kg | 03/05/15 | DD | SW8270D | |
| Phenol | ND | 1300 | ug/Kg | 03/05/15 | DD | SW8270D | |
| Pyrene | 6500 | 1300 | ug/Kg | 03/05/15 | DD | SW8270D | |

Project ID: 109 MARBLEDALE RD., TUCKAHOE, NY

Client ID: TB-10 (4-6)

Phoenix I.D.: BH79488

| Parameter | Result | RL/ PQL | Units | Date/Time | By | Reference |
|---|---|---|---|---|---|---|
| **QA/QC Surrogates** | | | | | | |
| % 2,4,6-Tribromophenol | 69 | | % | 03/05/15 | DD | 30 - 130 % |
| % 2-Fluorobiphenyl | 71 | | % | 03/05/15 | DD | 30 - 130 % |
| % 2-Fluorophenol | 62 | | % | 03/05/15 | DD | 30 - 130 % |
| % Nitrobenzene-d5 | 74 | | % | 03/05/15 | DD | 30 - 130 % |
| % Phenol-d5 | 60 | | % | 03/05/15 | DD | 30 - 130 % |
| % Terphenyl-d14 | 55 | | % | 03/05/15 | DD | 30 - 130 % |
| SVOA Library Search Top 15 | Completed | | | 03/06/15 | DD | |

1 = This parameter is not certified by NY NELAC for this matrix. NY NELAC does not offer certification for all parameters at this time.

**RL/PQL=Reporting/Practical Quantitation Level (Equivalent to NELAC LOQ, Limit of Quanitation) ND=Not Detected BRL=Below Reporting Level**

## Comments:

Please be advised that the NY 375 soil criteria for chromium are based on hexavalent chromium and trivalent chromium.

Semi-Volatile Comment:
Due to a matrix interference and/or the presence of a large amount of non-target material in the sample, a dilution was required resulting in an elevated RL for the semivolatile analysis.

All soils, solids and sludges are reported on a dry weight basis unless otherwise noted in the sample comments.

If there are any questions regarding this data, please call Phoenix Client Services at extension 200.
This report must not be reproduced except in full as defined by the attached chain of custody.

**Phyllis Shiller, Laboratory Director**

**March 16, 2015**

**Reviewed and Released by: Phyllis Shiller, Laboratory Director**

PHOENIX

Environmental Laboratories, Inc.
587 East Middle Turnpike, P.O.Box 370, Manchester, CT 06045
Tel. (860) 645-1102 Fax (860) 645-0823

ACCREDITED IN ACCORDANCE WITH nelac NY # 11301

# Analysis Report

March 16, 2015

FOR: Attn: Mr. Tim Carr
HydroEnvironmental Solutions, Inc.
One Deans Bridge Rd
Somers NY 10589

| Sample Information | | Custody Information | | Date | Time |
|---|---|---|---|---|---|
| Matrix: | SOIL | Collected by: | | 03/02/15 | 10:00 |
| Location Code: | HESNY-TUCK | Received by: | LB | 03/04/15 | 16:20 |
| Rush Request: | 72 Hour | Analyzed by: | see "By" below | | |
| P.O.#: | | | | | |

## Laboratory Data

SDG ID: GBH79483
Phoenix ID: BH79489

Project ID: 109 MARBLEDALE RD., TUCKAHOE, NY
Client ID: TB-10 (32-34)

| Parameter | Result | RL/ PQL | Units | Date/Time | By | Reference |
|---|---|---|---|---|---|---|
| Silver | 5.10 | 0.58 | mg/Kg | 03/05/15 | LK | SW6010C |
| Aluminum | 10300 | 88 | mg/Kg | 03/05/15 | LK | SW6010C |
| Arsenic | 17.1 | 1.2 | mg/Kg | 03/05/15 | LK | SW6010C |
| Barium | 332 | 0.58 | mg/Kg | 03/05/15 | LK | SW6010C |
| Beryllium | < 0.47 | 0.47 | mg/Kg | 03/05/15 | LK | SW6010C |
| Calcium | 86900 | 88 | mg/Kg | 03/05/15 | LK | SW6010C |
| Cadmium | 3.25 | 0.58 | mg/Kg | 03/05/15 | LK | SW6010C |
| Cobalt | 12.3 | 0.58 | mg/Kg | 03/05/15 | LK | SW6010C |
| Chromium | 84.7 | 0.58 | mg/Kg | 03/05/15 | LK | SW6010C |
| Copper | 90.9 | 0.58 | mg/kg | 03/05/15 | LK | SW6010C |
| Iron | 30900 | 88 | mg/Kg | 03/05/15 | LK | SW6010C |
| Mercury | 0.57 | 0.05 | mg/Kg | 03/05/15 | MA | SW7471B |
| Potassium | 2440 | 8.8 | mg/Kg | 03/05/15 | LK | SW6010C |
| Magnesium | 50100 | 88 | mg/Kg | 03/05/15 | LK | SW6010C |
| Manganese | 324 | 5.8 | mg/Kg | 03/05/15 | LK | SW6010C |
| Sodium | 202 | 8.8 | mg/Kg | 03/05/15 | LK | SW6010C |
| Nickel | 35.0 | 0.58 | mg/Kg | 03/05/15 | LK | SW6010C |
| Lead | 570 | 5.8 | mg/Kg | 03/05/15 | LK | SW6010C |
| Antimony | < 7.0 | 7.0 | mg/Kg | 03/05/15 | LK | SW6010C |
| Selenium | < 2.3 | 2.3 | mg/Kg | 03/05/15 | LK | SW6010C |
| Thallium | < 5.3 | 5.3 | mg/Kg | 03/05/15 | LK | SW6010C |
| Vanadium | 52.7 | 0.58 | mg/Kg | 03/05/15 | LK | SW6010C |
| Zinc | 677 | 5.8 | mg/Kg | 03/05/15 | LK | SW6010C |
| Percent Solid | 57 | | % | 03/04/15 | I | SW846-%Solid |
| Total Cyanide | 9.82 | 0.88 | mg/Kg | 03/04/15 | O/B/E | SW9012B |
| Soil Extraction for PCB | Completed | | | 03/04/15 | CC/H | SW3545A |
| Soil Extraction for SVOA | Completed | | | 03/04/15 | JJ/VH | SW3545A |
| Mercury Digestion | Completed | | | 03/05/15 | I/I | SW7471B |

Project ID: 109 MARBLEDALE RD., TUCKAHOE, NY
Client ID: TB-10 (32-34)

Phoenix I.D.: BH79489

| Parameter | Result | RL/ PQL | Units | Date/Time | By | Reference |
|---|---|---|---|---|---|---|
| Total Metals Digest | Completed | | | 03/04/15 | CB/AG | SW3050B |
| **Polychlorinated Biphenyls** | | | | | | |
| PCB-1016 | ND | 120 | ug/Kg | 03/10/15 | AW | SW8082A |
| PCB-1221 | ND | 120 | ug/Kg | 03/10/15 | AW | SW8082A |
| PCB-1232 | ND | 120 | ug/Kg | 03/10/15 | AW | SW8082A |
| PCB-1242 | ND | 120 | ug/Kg | 03/10/15 | AW | SW8082A |
| PCB-1248 | ND | 120 | ug/Kg | 03/10/15 | AW | SW8082A |
| PCB-1254 | ND | 120 | ug/Kg | 03/10/15 | AW | SW8082A |
| PCB-1260 | 130 | 120 | ug/Kg | 03/10/15 | AW | SW8082A |
| PCB-1262 | ND | 120 | ug/Kg | 03/10/15 | AW | SW8082A |
| PCB-1268 | ND | 120 | ug/Kg | 03/10/15 | AW | SW8082A |
| **QA/QC Surrogates** | | | | | | |
| % DCBP | 58 | | % | 03/10/15 | AW | 30 - 150 % |
| % TCMX | 56 | | % | 03/10/15 | AW | 30 - 150 % |
| **Volatiles (TCL)** | | | | | | |
| 1,1,1-Trichloroethane | ND | 8.1 | ug/kg | 03/06/15 | JLI | SW8260C |
| 1,1,2,2-Tetrachloroethane | ND | 8.1 | ug/kg | 03/06/15 | JLI | SW8260C |
| 1,1,2-Trichloroethane | ND | 8.1 | ug/kg | 03/06/15 | JLI | SW8260C |
| 1,1-Dichloroethane | ND | 8.1 | ug/kg | 03/06/15 | JLI | SW8260C |
| 1,1-Dichloroethene | ND | 8.1 | ug/kg | 03/06/15 | JLI | SW8260C |
| 1,2,3-Trichlorobenzene | ND | 360 | ug/kg | 03/06/15 | JLI | SW8260C |
| 1,2,4-Trichlorobenzene | ND | 360 | ug/kg | 03/06/15 | JLI | SW8260C |
| 1,2-Dibromo-3-chloropropane | ND | 360 | ug/kg | 03/06/15 | JLI | SW8260C |
| 1,2-Dibromoethane | ND | 8.1 | ug/kg | 03/06/15 | JLI | SW8260C |
| 1,2-Dichlorobenzene | ND | 360 | ug/kg | 03/06/15 | JLI | SW8260C |
| 1,2-Dichloroethane | ND | 8.1 | ug/kg | 03/06/15 | JLI | SW8260C |
| 1,2-Dichloropropane | ND | 8.1 | ug/kg | 03/06/15 | JLI | SW8260C |
| 1,3-Dichlorobenzene | ND | 360 | ug/kg | 03/06/15 | JLI | SW8260C |
| 1,4-Dichlorobenzene | ND | 360 | ug/kg | 03/06/15 | JLI | SW8260C |
| 2-Hexanone | ND | 41 | ug/kg | 03/06/15 | JLI | SW8260C |
| 4-Methyl-2-pentanone | ND | 41 | ug/kg | 03/06/15 | JLI | SW8260C |
| Acetone | ND | 50 | ug/kg | 03/06/15 | JLI | SW8260C |
| Benzene | 1800 | 8.1 | ug/kg | 03/06/15 | JLI | SW8260C |
| Bromochloromethane | ND | 8.1 | ug/kg | 03/06/15 | JLI | SW8260C |
| Bromodichloromethane | ND | 8.1 | ug/kg | 03/06/15 | JLI | SW8260C |
| Bromoform | ND | 8.1 | ug/kg | 03/06/15 | JLI | SW8260C |
| Bromomethane | ND | 8.1 | ug/kg | 03/06/15 | JLI | SW8260C |
| Carbon Disulfide | ND | 8.1 | ug/kg | 03/06/15 | JLI | SW8260C |
| Carbon tetrachloride | ND | 8.1 | ug/kg | 03/06/15 | JLI | SW8260C |
| Chlorobenzene | ND | 1000 | ug/kg | 03/06/15 | JLI | SW8260C |
| Chloroethane | ND | 8.1 | ug/kg | 03/06/15 | JLI | SW8260C |
| Chloroform | ND | 8.1 | ug/kg | 03/06/15 | JLI | SW8260C |
| Chloromethane | ND | 8.1 | ug/kg | 03/06/15 | JLI | SW8260C |
| cis-1,2-Dichloroethene | ND | 8.1 | ug/kg | 03/06/15 | JLI | SW8260C |
| cis-1,3-Dichloropropene | ND | 8.1 | ug/kg | 03/06/15 | JLI | SW8260C |
| Cyclohexane | ND | 8.1 | ug/kg | 03/06/15 | JLI | SW8260C |
| Dibromochloromethane | ND | 8.1 | ug/kg | 03/06/15 | JLI | SW8260C |
| Dichlorodifluoromethane | ND | 8.1 | ug/kg | 03/06/15 | JLI | SW8260C |

Project ID: 109 MARBLEDALE RD., TUCKAHOE, NY
Client ID: TB-10 (32-34)

Phoenix I.D.: BH79489

| Parameter | Result | RL/ PQL | Units | Date/Time | By | Reference |
|---|---|---|---|---|---|---|
| Ethylbenzene | 1200 | 8.1 | ug/kg | 03/06/15 | JLI | SW8260C |
| Isopropylbenzene | 6900 | 360 | ug/kg | 03/06/15 | JLI | SW8260C |
| m&p-Xylene | 4500 | 8.1 | ug/kg | 03/06/15 | JLI | SW8260C |
| Methyl ethyl ketone | ND | 49 | ug/kg | 03/06/15 | JLI | SW8260C |
| Methyl t-butyl ether (MTBE) | ND | 16 | ug/kg | 03/06/15 | JLI | SW8260C |
| Methylacetate | ND | 6.5 | ug/kg | 03/06/15 | JLI | SW8260C |
| Methylcyclohexane | 9200 | 8.1 | ug/kg | 03/06/15 | JLI | SW8260C |
| Methylene chloride | ND | 8.1 | ug/kg | 03/06/15 | JLI | SW8260C |
| o-Xylene | ND | 8.1 | ug/kg | 03/06/15 | JLI | SW8260C |
| Styrene | ND | 8.1 | ug/kg | 03/06/15 | JLI | SW8260C |
| Tetrachloroethene | ND | 8.1 | ug/kg | 03/06/15 | JLI | SW8260C |
| Toluene | ND | 8.1 | ug/kg | 03/06/15 | JLI | SW8260C |
| Total Xylenes | 4500 | 8.1 | ug/kg | 03/06/15 | JLI | SW8260C |
| trans-1,2-Dichloroethene | ND | 8.1 | ug/kg | 03/06/15 | JLI | SW8260C |
| trans-1,3-Dichloropropene | ND | 8.1 | ug/kg | 03/06/15 | JLI | SW8260C |
| Trichloroethene | ND | 8.1 | ug/kg | 03/06/15 | JLI | SW8260C |
| Trichlorofluoromethane | ND | 8.1 | ug/kg | 03/06/15 | JLI | SW8260C |
| Trichlorotrifluoroethane | ND | 8.1 | ug/kg | 03/06/15 | JLI | SW8260C |
| Vinyl chloride | ND | 8.1 | ug/kg | 03/06/15 | JLI | SW8260C |
| **QA/QC Surrogates** | | | | | | |
| % 1,2-dichlorobenzene-d4 | 99 | | % | 03/06/15 | JLI | 70 - 130 % |
| % Bromofluorobenzene | 96 | | % | 03/06/15 | JLI | 70 - 130 % |
| % Dibromofluoromethane | 99 | | % | 03/06/15 | JLI | 70 - 130 % |
| % Toluene-d8 | 92 | | % | 03/06/15 | JLI | 70 - 130 % |
| **1,4-dioxane** | | | | | | |
| 1,4-dioxane | ND | 17000 | ug/kg | 03/06/15 | JLI | SW8260C |
| Volatile Library Search Top 10 | Completed | | | 03/09/15 | JLI | |
| **Semivolatiles** | | | | | | |
| 1,1-Biphenyl | ND | 810 | ug/Kg | 03/05/15 | DD | SW8270D |
| 1,2,4,5-Tetrachlorobenzene | ND | 810 | ug/Kg | 03/05/15 | DD | SW8270D |
| 2,3,4,6-tetrachlorophenol | ND | 810 | ug/Kg | 03/05/15 | DD | SW8270D |
| 2,4,5-Trichlorophenol | ND | 810 | ug/Kg | 03/05/15 | DD | SW8270D |
| 2,4,6-Trichlorophenol | ND | 810 | ug/Kg | 03/05/15 | DD | SW8270D |
| 2,4-Dichlorophenol | ND | 810 | ug/Kg | 03/05/15 | DD | SW8270D |
| 2,4-Dimethylphenol | ND | 810 | ug/Kg | 03/05/15 | DD | SW8270D |
| 2,4-Dinitrophenol | ND | 1800 | ug/Kg | 03/05/15 | DD | SW8270D |
| 2,4-Dinitrotoluene | ND | 810 | ug/Kg | 03/05/15 | DD | SW8270D |
| 2,6-Dinitrotoluene | ND | 810 | ug/Kg | 03/05/15 | DD | SW8270D |
| 2-Chloronaphthalene | ND | 810 | ug/Kg | 03/05/15 | DD | SW8270D |
| 2-Chlorophenol | ND | 810 | ug/Kg | 03/05/15 | DD | SW8270D |
| 2-Methylnaphthalene | 6500 | 810 | ug/Kg | 03/05/15 | DD | SW8270D |
| 2-Methylphenol (o-cresol) | ND | 330 | ug/Kg | 03/05/15 | DD | SW8270D |
| 2-Nitroaniline | ND | 1800 | ug/Kg | 03/05/15 | DD | SW8270D |
| 2-Nitrophenol | ND | 810 | ug/Kg | 03/05/15 | DD | SW8270D |
| 3&4-Methylphenol (m&p-cresol) | ND | 1200 | ug/Kg | 03/05/15 | DD | SW8270D 1 |
| 3,3'-Dichlorobenzidine | ND | 1400 | ug/Kg | 03/05/15 | DD | SW8270D |
| 3-Nitroaniline | ND | 1800 | ug/Kg | 03/05/15 | DD | SW8270D |

Project ID: 109 MARBLEDALE RD., TUCKAHOE, NY
Client ID: TB-10 (32-34)

Phoenix I.D.: BH79489

| Parameter | Result | RL/ PQL | Units | Date/Time | By | Reference | |
|---|---|---|---|---|---|---|---|
| 4,6-Dinitro-2-methylphenol | ND | 3300 | ug/Kg | 03/05/15 | DD | SW8270D | |
| 4-Bromophenyl phenyl ether | ND | 1200 | ug/Kg | 03/05/15 | DD | SW8270D | |
| 4-Chloro-3-methylphenol | ND | 810 | ug/Kg | 03/05/15 | DD | SW8270D | |
| 4-Chloroaniline | ND | 810 | ug/Kg | 03/05/15 | DD | SW8270D | |
| 4-Chlorophenyl phenyl ether | ND | 810 | ug/Kg | 03/05/15 | DD | SW8270D | |
| 4-Nitroaniline | ND | 1800 | ug/Kg | 03/05/15 | DD | SW8270D | |
| 4-Nitrophenol | ND | 3300 | ug/Kg | 03/05/15 | DD | SW8270D | |
| Acenaphthene | ND | 810 | ug/Kg | 03/05/15 | DD | SW8270D | |
| Acenaphthylene | ND | 810 | ug/Kg | 03/05/15 | DD | SW8270D | |
| Acetophenone | ND | 810 | ug/Kg | 03/05/15 | DD | SW8270D | |
| Anthracene | ND | 810 | ug/Kg | 03/05/15 | DD | SW8270D | |
| Atrazine | ND | 810 | ug/Kg | 03/05/15 | DD | SW8270D | |
| Benz(a)anthracene | 1500 | 810 | ug/Kg | 03/05/15 | DD | SW8270D | |
| Benzaldehyde | ND | 810 | ug/Kg | 03/05/15 | DD | SW8270D | |
| Benzo(a)pyrene | 1200 | 810 | ug/Kg | 03/05/15 | DD | SW8270D | |
| Benzo(b)fluoranthene | 1500 | 810 | ug/Kg | 03/05/15 | DD | SW8270D | |
| Benzo(ghi)perylene | ND | 810 | ug/Kg | 03/05/15 | DD | SW8270D | |
| Benzo(k)fluoranthene | ND | 800 | ug/Kg | 03/05/15 | DD | SW8270D | |
| Benzyl butyl phthalate | ND | 810 | ug/Kg | 03/05/15 | DD | SW8270D | |
| Bis(2-chloroethoxy)methane | ND | 810 | ug/Kg | 03/05/15 | DD | SW8270D | |
| Bis(2-chloroethyl)ether | ND | 1200 | ug/Kg | 03/05/15 | DD | SW8270D | |
| Bis(2-chloroisopropyl)ether | ND | 810 | ug/Kg | 03/05/15 | DD | SW8270D | 1 |
| Bis(2-ethylhexyl)phthalate | 4000 | 810 | ug/Kg | 03/05/15 | DD | SW8270D | |
| Caprolactam | ND | 810 | ug/Kg | 03/05/15 | DD | SW8270D | |
| Carbazole | ND | 3300 | ug/Kg | 03/05/15 | DD | SW8270D | |
| Chrysene | 1500 | 810 | ug/Kg | 03/05/15 | DD | SW8270D | |
| Dibenz(a,h)anthracene | ND | 330 | ug/Kg | 03/05/15 | DD | SW8270D | |
| Dibenzofuran | ND | 810 | ug/Kg | 03/05/15 | DD | SW8270D | |
| Diethyl phthalate | ND | 810 | ug/Kg | 03/05/15 | DD | SW8270D | |
| Dimethylphthalate | ND | 810 | ug/Kg | 03/05/15 | DD | SW8270D | |
| Di-n-butylphthalate | ND | 810 | ug/Kg | 03/05/15 | DD | SW8270D | |
| Di-n-octylphthalate | ND | 810 | ug/Kg | 03/05/15 | DD | SW8270D | |
| Fluoranthene | 2100 | 810 | ug/Kg | 03/05/15 | DD | SW8270D | |
| Fluorene | ND | 810 | ug/Kg | 03/05/15 | DD | SW8270D | |
| Hexachlorobenzene | ND | 810 | ug/Kg | 03/05/15 | DD | SW8270D | |
| Hexachlorobutadiene | ND | 810 | ug/Kg | 03/05/15 | DD | SW8270D | |
| Hexachlorocyclopentadiene | ND | 810 | ug/Kg | 03/05/15 | DD | SW8270D | |
| Hexachloroethane | ND | 810 | ug/Kg | 03/05/15 | DD | SW8270D | |
| Indeno(1,2,3-cd)pyrene | 660 | 500 | ug/Kg | 03/05/15 | DD | SW8270D | |
| Isophorone | ND | 810 | ug/Kg | 03/05/15 | DD | SW8270D | |
| Naphthalene | 7400 | 810 | ug/Kg | 03/05/15 | DD | SW8270D | |
| Nitrobenzene | ND | 810 | ug/Kg | 03/05/15 | DD | SW8270D | |
| N-Nitrosodimethylamine | ND | 1200 | ug/Kg | 03/05/15 | DD | SW8270D | |
| N-Nitrosodi-n-propylamine | ND | 810 | ug/Kg | 03/05/15 | DD | SW8270D | |
| N-Nitrosodiphenylamine | ND | 1200 | ug/Kg | 03/05/15 | DD | SW8270D | |
| Pentachlorophenol | ND | 800 | ug/Kg | 03/05/15 | DD | SW8270D | |
| Phenanthrene | 2100 | 810 | ug/Kg | 03/05/15 | DD | SW8270D | |
| Phenol | ND | 330 | ug/Kg | 03/05/15 | DD | SW8270D | |
| Pyrene | 1700 | 810 | ug/Kg | 03/05/15 | DD | SW8270D | |

Project ID: 109 MARBLEDALE RD., TUCKAHOE, NY
Client ID: TB-10 (32-34)

Phoenix I.D.: BH79489

| Parameter | Result | RL/ PQL | Units | Date/Time | By | Reference |
|---|---|---|---|---|---|---|
| **QA/QC Surrogates** | | | | | | |
| % 2,4,6-Tribromophenol | 93 | | % | 03/05/15 | DD | 30 - 130 % |
| % 2-Fluorobiphenyl | 65 | | % | 03/05/15 | DD | 30 - 130 % |
| % 2-Fluorophenol | 67 | | % | 03/05/15 | DD | 30 - 130 % |
| % Nitrobenzene-d5 | 62 | | % | 03/05/15 | DD | 30 - 130 % |
| % Phenol-d5 | 70 | | % | 03/05/15 | DD | 30 - 130 % |
| % Terphenyl-d14 | 51 | | % | 03/05/15 | DD | 30 - 130 % |
| SVOA Library Search Top 15 | Completed | | | 03/06/15 | DD | |

1 = This parameter is not certified by NY NELAC for this matrix. NY NELAC does not offer certification for all parameters at this time.

**RL/PQL=Reporting/Practical Quantitation Level (Equivalent to NELAC LOQ, Limit of Quanitation) ND=Not Detected BRL=Below Reporting Level**

## Comments:

Please be advised that the NY 375 soil criteria for chromium are based on hexavalent chromium and trivalent chromium.

Semi-Volatile Comment:
Due to a matrix interference and/or the presence of a large amount of non-target material in the sample, a dilution was required resulting in an elevated RL for the semivolatile analysis.

Volatile Comment:
Elevated reporting limits for volatiles due to the presence of non-target compounds.
There is an elevated reporting level for chlorobenzene because there was a problem with high level vials for this compound.

All soils, solids and sludges are reported on a dry weight basis unless otherwise noted in the sample comments.

If there are any questions regarding this data, please call Phoenix Client Services at extension 200.
This report must not be reproduced except in full as defined by the attached chain of custody.

**Phyllis Shiller, Laboratory Director**
**March 16, 2015**
**Reviewed and Released by: Phyllis Shiller, Laboratory Director**

1E
VOLATILE ORGANICS ANALYSIS DATA SHEET
TENTATIVELY IDENTIFIED COMPOUNDS

CLIENT ID
TB-3 (2-4)

Lab Name: Phoenix Environmental Labs  Client: HESNY-TUCK

Lab Code: Phoenix  Case No.:  SAS No.:  SDG No.: GBH79483

Matrix:(soil/water) SOIL  Lab Sample ID: BH79483

Sample wt/vol: 6.33 (g/mL) g  Lab File ID: 0304M45.D

Level: (low/med) Low  Date Received: 03/04/15

% Moisture: not dec. 18  Date Analyzed: 03/05/15

GC Column: rtx-vms  ID: 0.18 (mm)  Dilution Factor: 1

Soil Extract Volume: 5000 (uL)  Soil Aliquot Vol (uL): 5000

Number TICs found: 9  CONCENTRATION UNITS: (ug/L or ug/KG) ug/Kg

| CAS NUMBER | COMPOUND NAME | RT | EST. CONC. | Q |
|---|---|---|---|---|
| 000526-73-8 | Benzene, 1,2,3-trimethyl- | 7.475 | 380 | JN |
| 000535-77-3 | Benzene, 1-methyl-3-(1-methylethyl)- | 8.380 | 450 | JN |
| 000527-84-4 | Benzene, 1-methyl-2-(1-methylethyl)- | 8.443 | 420 | JN |
| | unknown | 8.542 | 490 | JN |
| 000488-23-3 | Benzene, 1,2,3,4-tetramethyl- | 8.893 | 510 | JN |
| 000824-90-8 | 1-Phenyl-1-butene | 9.274 | 360 | JN |
| 000119-64-2 | Naphthalene, 1,2,3,4-tetrahydro- | 9.416 | 340 | JN |
| 006682-71-9 | 1H-Indene, 2,3-dihydro-4,7-dimethyl- | 9.630 | 510 | JN |
| 000091-57-6 | Naphthalene, 2-methyl- | 10.932 | 360 | JN |

1E
VOLATILE ORGANICS ANALYSIS DATA SHEET
TENTATIVELY IDENTIFIED COMPOUNDS

CLIENT ID

TB-4 (24-26)

Lab Name: Phoenix Environmental Labs  Client: HESNY-TUCK

Lab Code: Phoenix  Case No.:  SAS No.:  SDG No.: GBH79483

Matrix:(soil/water) SOIL  Lab Sample ID: BH79484

Sample wt/vol: 3.91 (g/mL) g  Lab File ID: 0304M46.D

Level: (low/med) Low  Date Received: 03/04/15

% Moisture: not dec. 21  Date Analyzed: 03/05/15

GC Column: rtx-vms  ID: 0.18 (mm)  Dilution Factor: 1

Soil Extract Volume: 5000 (uL)  Soil Aliquot Vol (uL): 5000

Number TICs found: 9  CONCENTRATION UNITS: (ug/L or ug/KG) ug/Kg

| CAS NUMBER | COMPOUND NAME | RT | EST. CONC. | Q |
|---|---|---|---|---|
| 000565-59-3 | Pentane, 2,3-dimethyl- | 3.009 | 410 | JN |
| 000590-73-8 | Hexane, 2,2-dimethyl- | 3.244 | 650 | JN |
| 000565-75-3 | Pentane, 2,3,4-trimethyl- | 3.997 | 130 | JN |
| 000560-21-4 | Pentane, 2,3,3-trimethyl- | 4.091 | 140 | JN |
| 000526-73-8 | Benzene, 1,2,3-trimethyl- | 7.470 | 270 | JN |
| 000527-84-4 | Benzene, 1-methyl-2-(1-methylethyl)- | 8.380 | 110 | JN |
| 000535-77-3 | Benzene, 1-methyl-3-(1-methylethyl)- | 8.448 | 92 | JN |
| 000527-53-7 | Benzene, 1,2,3,5-tetramethyl- | 8.893 | 120 | JN |
| | unknown | 9.274 | 150 | JN |

1E
VOLATILE ORGANICS ANALYSIS DATA SHEET
TENTATIVELY IDENTIFIED COMPOUNDS

CLIENT ID
TB-4 (30-32)

Lab Name: Phoenix Environmental Labs  Client: HESNY-TUCK

Lab Code: Phoenix  Case No.:  SAS No.:  SDG No.: GBH79483

Matrix:(soil/water) SOIL  Lab Sample ID: BH79485

Sample wt/vol: 5.87 (g/mL) g  Lab File ID: 0304M47.D

Level: (low/med) Low  Date Received: 03/04/15

% Moisture: not dec. 39  Date Analyzed: 03/05/15

GC Column: rtx-vms  ID: 0.18 (mm)  Dilution Factor: 1

Soil Extract Volume: 5000 (uL)  Soil Aliquot Vol (uL): 5000

Number TICs found: 9  CONCENTRATION UNITS: (ug/L or ug/KG) ug/Kg

| CAS NUMBER | COMPOUND NAME | RT | EST. CONC. | Q |
|---|---|---|---|---|
| 013475-82-6 | Heptane, 2,2,4,6,6-pentamethyl- | 3.244 | 210 | JN |
| 000108-67-8 | Benzene, 1,3,5-trimethyl- | 7.475 | 280 | JN |
| 000527-84-4 | Benzene, 1-methyl-2-(1-methylethyl)- | 8.448 | 180 | JN |
| | unknown | 8.537 | 210 | JN |
| | unknown | 9.097 | 520 | JN |
| 006044-71-9 | Dodecane, 6-methyl- | 9.274 | 500 | JN |
| 006682-71-9 | 1H-Indene, 2,3-dihydro-4,7-dimethyl- | 9.630 | 200 | JN |
| 000629-50-5 | Tridecane | 9.996 | 470 | JN |
| 000544-76-3 | Hexadecane | 10.702 | 310 | JN |

1E
VOLATILE ORGANICS ANALYSIS DATA SHEET
TENTATIVELY IDENTIFIED COMPOUNDS

CLIENT ID
TB-9 (2-4)

Lab Name: Phoenix Environmental Labs  Client: HESNY-TUCK

Lab Code: Phoenix  Case No.:  SAS No.:  SDG No.: GBH79483

Matrix:(soil/water) SOIL  Lab Sample ID: BH79486

Sample wt/vol: 5.43 (g/mL) g  Lab File ID: 0304M48.D

Level: (low/med) Low  Date Received: 03/04/15

% Moisture: not dec. 13  Date Analyzed: 03/05/15

GC Column: rtx-vms  ID: 0.18 (mm)  Dilution Factor: 1

Soil Extract Volume: 5000 (uL)  Soil Aliquot Vol (uL): 5000

Number TICs found: 7  CONCENTRATION UNITS: (ug/L or ug/KG) ug/Kg

| CAS NUMBER | COMPOUND NAME | RT | EST. CONC. | Q |
|---|---|---|---|---|
| 013475-82-6 | Heptane, 2,2,4,6,6-pentamethyl- | 7.308 | 7.5 | JN |
| 017312-83-3 | Undecane, 5,7-dimethyl- | 7.543 | 17 | JN |
| | unknown | 7.773 | 19 | JN |
| | unknown | 8.893 | 6.7 | JN |
| | unknown | 9.280 | 6.2 | JN |
| 000629-50-5 | Tridecane | 9.996 | 7.3 | JN |
| 000629-59-4 | Tetradecane | 10.702 | 6 | JN |

1E
VOLATILE ORGANICS ANALYSIS DATA SHEET
TENTATIVELY IDENTIFIED COMPOUNDS

CLIENT ID
TB-9 (7-9)

Lab Name: Phoenix Environmental Labs  Client: HESNY-TUCK

Lab Code: Phoenix  Case No.:  SAS No.:  SDG No.: GBH79483

Matrix:(soil/water) SOIL  Lab Sample ID: BH79487

Sample wt/vol: 5.61 (g/mL) g  Lab File ID: 0304M49.D

Level: (low/med) Low  Date Received: 03/04/15

% Moisture: not dec. 14  Date Analyzed: 03/05/15

GC Column: rtx-vms  ID: 0.18 (mm)  Dilution Factor: 1

Soil Extract Volume: 5000 (uL)  Soil Aliquot Vol (uL): 5000

Number TICs found: 9  CONCENTRATION UNITS: (ug/L or ug/KG) ug/Kg

| CAS NUMBER | COMPOUND NAME | RT | EST. CONC. | Q |
|---|---|---|---|---|
| 000066-25-1 | Hexanal | 5.556 | 32 | JN |
| 000611-14-3 | Benzene, 1-ethyl-2-methyl- | 7.031 | 14 | JN |
| 000622-96-8 | Benzene, 1-ethyl-4-methyl- | 7.308 | 13 | JN |
| 000620-14-4 | Benzene, 1-ethyl-3-methyl- | 7.475 | 22 | JN |
| | unknown | 8.537 | 17 | JN |
| | unknown | 9.097 | 22 | JN |
| | unknown | 9.280 | 25 | JN |
| 000769-25-5 | Benzene, 2-ethenyl-1,3,5-trimethyl- | 9.630 | 14 | JN |
| 000091-20-3 | Naphthalene | 9.970 | 16 | JN |

1E
VOLATILE ORGANICS ANALYSIS DATA SHEET
TENTATIVELY IDENTIFIED COMPOUNDS

CLIENT ID

TB-10 (4-6)

Lab Name: Phoenix Environmental Labs  Client: HESNY-TUCK

Lab Code: Phoenix  Case No.:  SAS No.:  SDG No.: GBH79483

Matrix:(soil/water) SOIL  Lab Sample ID: BH79488

Sample wt/vol: 8.21 (g/mL) g  Lab File ID: 0304M51.D

Level: (low/med) Low  Date Received: 03/04/15

% Moisture: not dec. 13  Date Analyzed: 03/05/15

GC Column: rtx-vms  ID: 0.18 (mm)  Dilution Factor: 1

Soil Extract Volume: 5000 (uL)  Soil Aliquot Vol (uL): 5000

Number TICs found: 9  CONCENTRATION UNITS: (ug/L or ug/KG) ug/Kg

| CAS NUMBER | COMPOUND NAME | RT | EST. CONC. | Q |
|---|---|---|---|---|
| 000620-14-4 | Benzene, 1-ethyl-3-methyl- | 7.025 | 11 | JN |
| 000526-73-8 | Benzene, 1,2,3-trimethyl- | 7.120 | 9.9 | JN |
| 000108-67-8 | Benzene, 1,3,5-trimethyl- | 7.470 | 19 | JN |
| 000496-11-7 | Indane | 8.003 | 15 | JN |
| | unknown | 9.097 | 7.5 | JN |
| 000824-22-6 | 1H-Indene, 2,3-dihydro-4-methyl- | 9.274 | 13 | JN |
| 000091-20-3 | Naphthalene | 9.960 | 180 | JN |
| 000091-57-6 | Naphthalene, 2-methyl- | 10.817 | 27 | JN |
| 000090-12-0 | Naphthalene, 1-methyl- | 10.932 | 17 | JN |

1E
VOLATILE ORGANICS ANALYSIS DATA SHEET
TENTATIVELY IDENTIFIED COMPOUNDS

CLIENT ID
TB-10 (32-34)

Lab Name: Phoenix Environmental Labs  Client: HESNY-TUCK

Lab Code: Phoenix  Case No.:  SAS No.:  SDG No.: GBH79483

Matrix:(soil/water) SOIL  Lab Sample ID: BH79489

Sample wt/vol: 5.21 (g/mL) g  Lab File ID: 0306_17.D

Level: (low/med) Meth  Date Received: 03/04/15

% Moisture: not dec. 43  Date Analyzed: 03/06/15

GC Column: rtx-vms  ID: 0.18 (mm)  Dilution Factor: 50

Soil Extract Volume: 10000 (uL)  Soil Aliquot Vol (uL): 100

Number TICs found: 10  CONCENTRATION UNITS: (ug/L or ug/KG) ug/Kg

| CAS NUMBER | COMPOUND NAME | RT | EST. CONC. | Q |
|---|---|---|---|---|
| 000594-82-1 | Butane, 2,2,3,3-tetramethyl- | 3.252 | 70000 | JN |
| 000565-75-3 | Pentane, 2,3,4-trimethyl- | 3.949 | 65000 | JN |
| 000609-26-7 | Pentane, 3-ethyl-2-methyl- | 4.038 | 110000 | JN |
| 000103-65-1 | Benzene, propyl- | 6.529 | 69000 | JN |
| 000526-73-8 | Benzene, 1,2,3-trimethyl- | 6.681 | 71000 | JN |
| 000108-67-8 | Benzene, 1,3,5-trimethyl- | 6.990 | 220000 | JN |
| 000496-11-7 | Indane | 7.436 | 50000 | JN |
| 000934-74-7 | Benzene, 1-ethyl-3,5-dimethyl- | 7.499 | 49000 | JN |
| 001758-88-9 | Benzene, 2-ethyl-1,4-dimethyl- | 7.729 | 53000 | JN |
| 000874-41-9 | Benzene, 1-ethyl-2,4-dimethyl- | 7.808 | 44000 | JN |

1F
SEMIVOLATILE ORGANICS ANALYSIS DATA SHEET
TENTATIVELY IDENTIFIED COMPOUNDS

CLIENT ID
TB-3 (2-4)

Lab Name: Phoenix Environmental Labs  Client: HESNY-TUCK

Lab Code: Phoenix  Case No.:  SAS No.:  SDG No.: GBH79483

Matrix:(soil/water) SOIL  Lab Sample ID: BH79483

Sample wt/vol: 15.15 (g/mL) g  Lab File ID: 0305_18.D

Level: (low/med) Low  Date Received: 03/04/15

% Moisture: not dec. 18 decanted:(Y/N) NA  Date Extracted: 03/05/15

GPC Cleanup (Y/N): N pH: NA  Date Analyzed: 3/5/2015

Conc. Extract Volume: 1000 (uL)  Dilution Factor 2

Injection Volume: 2 (uL)

Number TICs found: 8  CONCENTRATION UNITS: (ug/L or ug/KG) ug/Kg

| CAS NUMBER | COMPOUND NAME | RT | EST. CONC. | Q |
|---|---|---|---|---|
| 000123-42-2 | 2-Pentanone, 4-hydroxy-4-methyl- | 3.717 | 1700 | JNA |
| 000095-93-2 | Benzene, 1,2,4,5-tetramethyl- | 6.936 | 1000 | JN |
| 017301-28-9 | Undecane, 3,6-dimethyl- | 7.828 | 1300 | JN |
| | Unknown | 8.007 | 720 | JN |
| 002051-30-1 | Octane, 2,6-dimethyl- | 8.405 | 1800 | JN |
| 004453-90-1 | 1,4-Methanonaphthalene, 1,4-dihydro- | 8.942 | 740 | JN |
| | Unknown | 9.999 | 830 | JN |
| | Unknown | 13.881 | 760 | JN |

1F
SEMIVOLATILE ORGANICS ANALYSIS DATA SHEET
TENTATIVELY IDENTIFIED COMPOUNDS

CLIENT ID

TB-4 (24-26)

Lab Name: Phoenix Environmental Labs  Client: HESNY-TUCK

Lab Code: Phoenix  Case No.:  SAS No.:  SDG No.: GBH79483

Matrix:(soil/water) SOIL  Lab Sample ID: BH79484

Sample wt/vol: 15.1 (g/mL) g  Lab File ID: 0305_19.D

Level: (low/med) Low  Date Received: 03/04/15

% Moisture: not dec. 21 decanted:(Y/N) NA  Date Extracted: 03/05/15

GPC Cleanup (Y/N): N pH: NA  Date Analyzed: 3/5/2015

Conc. Extract Volume: 1000 (uL)  Dilution Factor 2

Injection Volume: 2 (uL)

Number TICs found: 4  CONCENTRATION UNITS: (ug/L or ug/KG) ug/Kg

| CAS NUMBER | COMPOUND NAME | RT | EST. CONC. | Q |
|---|---|---|---|---|
| 000123-42-2 | 2-Pentanone, 4-hydroxy-4-methyl- | 3.719 | 1300 | JNA |
| | Unknown | 16.955 | 3800 | JN |
| | Unknown | 17.279 | 4700 | JN |
| 000630-02-4 | Octacosane | 22.192 | 6700 | JN |

1F
SEMIVOLATILE ORGANICS ANALYSIS DATA SHEET
TENTATIVELY IDENTIFIED COMPOUNDS

CLIENT ID

TB-4 (30-32)

Lab Name: Phoenix Environmental Labs  Client: HESNY-TUCK

Lab Code: Phoenix  Case No.:  SAS No.:  SDG No.: GBH79483

Matrix:(soil/water) SOIL  Lab Sample ID: BH79485

Sample wt/vol: 15.15 (g/mL) g  Lab File ID: 0305_20.D

Level: (low/med) Low  Date Received: 03/04/15

% Moisture: not dec. 39 decanted:(Y/N) NA  Date Extracted: 03/05/15

GPC Cleanup (Y/N): N  pH: NA  Date Analyzed: 3/5/2015

Conc. Extract Volume: 1000 (uL)  Dilution Factor 1

Injection Volume: 2 (uL)

Number TICs found: 12  CONCENTRATION UNITS: (ug/L or ug/KG) ug/Kg

| CAS NUMBER | COMPOUND NAME | RT | EST. CONC. | Q |
|---|---|---|---|---|
| 000123-42-2 | 2-Pentanone, 4-hydroxy-4-methyl- | 3.725 | 2200 | JNA |
| 017301-23-4 | Undecane, 2,6-dimethyl- | 7.828 | 450 | JN |
| | Unknown | 8.405 | 660 | JN |
| 000629-59-4 | Tetradecane | 10.124 | 540 | JN |
| 030824-81-8 | Naphthalene, decahydro-1,4a-dimethyl-7-(1-methylet | 10.530 | 600 | JN |
| | Unknown | 13.102 | 1000 | JN |
| 000057-10-3 | n-Hexadecanoic acid | 13.943 | 4000 | JN |
| 006566-19-4 | 10,18-Bisnorabieta-5,7,9(10),11,13-pentaene | 14.977 | 2400 | JN |
| | Unknown | 18.538 | 5900 | JN |
| | Unknown | 18.728 | 3200 | JN |
| 000629-92-5 | Nonadecane | 18.896 | 2600 | JN |
| 000629-94-7 | Heneicosane | 22.217 | 5100 | JN |

1F
SEMIVOLATILE ORGANICS ANALYSIS DATA SHEET
TENTATIVELY IDENTIFIED COMPOUNDS

CLIENT ID
TB-9 (2-4)

Lab Name: Phoenix Environmental Labs  Client: HESNY-TUCK

Lab Code: Phoenix  Case No.:  SAS No.:  SDG No.: GBH79483

Matrix:(soil/water) SOIL  Lab Sample ID: BH79486

Sample wt/vol: 15.07 (g/mL) g  Lab File ID: 0305_21.D

Level: (low/med) Low  Date Received: 03/04/15

% Moisture: not dec. 13 decanted:(Y/N) NA  Date Extracted: 03/05/15

GPC Cleanup (Y/N): N pH: NA  Date Analyzed: 3/5/2015

Conc. Extract Volume: 1000 (uL)  Dilution Factor 2

Injection Volume: 2 (uL)

Number TICs found: 1  CONCENTRATION UNITS: (ug/L or ug/KG) ug/Kg

| CAS NUMBER | COMPOUND NAME | RT | EST. CONC. | Q |
|---|---|---|---|---|
| 000123-42-2 | 2-Pentanone, 4-hydroxy-4-methyl- | 3.722 | 1700 | JNA |

FORM I SEMIVOA-TIC

1F
SEMIVOLATILE ORGANICS ANALYSIS DATA SHEET
TENTATIVELY IDENTIFIED COMPOUNDS

CLIENT ID
TB-9 (7-9)

Lab Name: Phoenix Environmental Labs  Client: HESNY-TUCK

Lab Code: Phoenix  Case No.:  SAS No.:  SDG No.: GBH79483

Matrix:(soil/water) SOIL  Lab Sample ID: BH79487

Sample wt/vol: 15.33 (g/mL) g  Lab File ID: 0305_22.D

Level: (low/med) Low  Date Received: 03/04/15

% Moisture: not dec. 14 decanted:(Y/N) NA  Date Extracted: 03/05/15

GPC Cleanup (Y/N): N pH: NA  Date Analyzed: 3/5/2015

Conc. Extract Volume: 1000 (uL)  Dilution Factor 2

Injection Volume: 2 (uL)

Number TICs found: 3  CONCENTRATION UNITS: (ug/L or ug/KG) ug/Kg

| CAS NUMBER | COMPOUND NAME | RT | EST. CONC. | Q |
|---|---|---|---|---|
| 000123-42-2 | 2-Pentanone, 4-hydroxy-4-methyl- | 3.720 | 1900 | JNA |
| | Unknown | 13.881 | 750 | JN |
| 000092-06-8 | m-Terphenyl | 15.310 | 640 | JN |

1F
SEMIVOLATILE ORGANICS ANALYSIS DATA SHEET
TENTATIVELY IDENTIFIED COMPOUNDS

CLIENT ID

TB-10 (4-6)

Lab Name: Phoenix Environmental Labs  Client: HESNY-TUCK

Lab Code: Phoenix  Case No.:  SAS No.:  SDG No.: GBH79483

Matrix:(soil/water) SOIL  Lab Sample ID: BH79488

Sample wt/vol: 15.16 (g/mL) g  Lab File ID: 0305_23.D

Level: (low/med) Low  Date Received: 03/04/15

% Moisture: not dec. 13 decanted:(Y/N) NA  Date Extracted: 03/05/15

GPC Cleanup (Y/N): N pH: NA  Date Analyzed: 3/5/2015

Conc. Extract Volume: 1000 (uL)  Dilution Factor 5

Injection Volume: 2 (uL)

Number TICs found: 4  CONCENTRATION UNITS: (ug/L or ug/KG) ug/Kg

| CAS NUMBER | COMPOUND NAME | RT | EST. CONC. | Q |
|---|---|---|---|---|
| 000123-42-2 | 2-Pentanone, 4-hydroxy-4-methyl- | 3.720 | 1700 | JNA |
| 000629-50-5 | Tridecane | 8.681 | 1700 | JN |
| 000629-59-4 | Tetradecane | 9.601 | 1600 | JN |
| 000203-64-5 | 4H-Cyclopenta[def]phenanthrene | 13.881 | 1600 | JN |

1F
SEMIVOLATILE ORGANICS ANALYSIS DATA SHEET
TENTATIVELY IDENTIFIED COMPOUNDS

CLIENT ID

TB-10 (32-34)

Lab Name: Phoenix Environmental Labs  Client: HESNY-TUCK

Lab Code: Phoenix  Case No.:  SAS No.:  SDG No.: GBH79483

Matrix:(soil/water) SOIL  Lab Sample ID: BH79489

Sample wt/vol: 15.22 (g/mL) g  Lab File ID: 0305_22.D

Level: (low/med) Low  Date Received: 03/04/15

% Moisture: not dec. 43 decanted:(Y/N) NA  Date Extracted: 03/05/15

GPC Cleanup (Y/N): N  pH: NA  Date Analyzed: 3/5/2015

Conc. Extract Volume: 1000 (uL)  Dilution Factor 2

Injection Volume: 2 (uL)

Number TICs found: 15  CONCENTRATION UNITS: (ug/L or ug/KG) ug/Kg

| CAS NUMBER | COMPOUND NAME | RT | EST. CONC. | Q |
|---|---|---|---|---|
| | Unknown | 3.780 | 3300 | JN |
| 000098-82-8 | Benzene, (1-methylethyl)- | 4.520 | 3800 | JN |
| 000103-65-1 | Benzene, propyl- | 4.870 | 10000 | JN |
| 000611-14-3 | Benzene, 1-ethyl-2-methyl- | 4.960 | 6800 | JN |
| 000526-73-8 | Benzene, 1,2,3-trimethyl- | 5.350 | 45000 | JN |
| 000108-67-8 | Benzene, 1,3,5-trimethyl- | 5.660 | 12000 | JN |
| 000496-11-7 | 1H-Indene, 2,3-dihydro- | 5.820 | 6100 | JN |
| 000135-01-3 | Benzene, 1,2-diethyl- | 5.930 | 4300 | JN |
| 001074-43-7 | Benzene, 1-methyl-3-propyl- | 5.970 | 6500 | JN |
| 000933-98-2 | Benzene, 1-ethyl-2,3-dimethyl- | 6.040 | 13000 | JN |
| 000527-53-7 | Benzene, 1,2,3,5-tetramethyl- | 6.240 | 6600 | JN |
| 000535-77-3 | Benzene, 1-methyl-3-(1-methylethyl | 6.280 | 5600 | JN |
| 000488-23-3 | Benzene, 1,2,3,4-tetramethyl- | 6.700 | 4100 | JN |
| | Benzene, 1-ethyl-2,3-dimethyl- Isomer | 6.730 | 4900 | JN |
| 002039-89-6 | Benzene, 2-ethenyl-1,4-dimethyl- | 7.060 | 5800 | JN |

PHOENIX

Environmental Laboratories, Inc.
587 East Middle Turnpike, P.O.Box 370, Manchester, CT 06045
Tel. (860) 645-1102 Fax (860) 645-0823

ACCREDITED IN ACCORDANCE WITH nelac NY # 11301

# QA/QC Report

March 16, 2015

## QA/QC Data

SDG I.D.: GBH79483

| Parameter | Blank | Sample Result | Dup Result | Dup RPD | LCS % | LCSD % | LCS RPD | MS % | MSD % | MS RPD | % Rec Limits | % RPD Limits | |
|---|---|---|---|---|---|---|---|---|---|---|---|---|---|
| QA/QC Batch 300815, QC Sample No: BH78545 (BH79483, BH79484, BH79485, BH79486, BH79487, BH79488, BH79489) | | | | | | | | | | | | | |
| Mercury - Soil | BRL | 0.34 | 0.32 | 6.10 | 99.2 | | | 75.8 | 55.2 | 31.5 | 70 - 130 | 30 | m,r |

**Comment:**

LCSD not reported.

Additional Mercury criteria: LCS acceptance range for waters is 80-120% and for soils is 70-130%.

QA/QC Batch 300775, QC Sample No: BH79341 (BH79483, BH79484, BH79485, BH79486, BH79487, BH79488, BH79489)

### ICP Metals - Soil

| | | | | | | | | | | | | | |
|---|---|---|---|---|---|---|---|---|---|---|---|---|---|
| Aluminum | BRL | 8930 | 7970 | 11.4 | 101 | 110 | 8.5 | NC | NC | NC | 75 - 125 | 30 | |
| Antimony | BRL | <1.8 | <3.4 | NC | 110 | 114 | 3.6 | 90.3 | 93.6 | 3.6 | 75 - 125 | 30 | |
| Arsenic | BRL | 2.9 | 2.85 | NC | 99.6 | 108 | 8.1 | 99.3 | 99.0 | 0.3 | 75 - 125 | 30 | |
| Barium | BRL | 55.2 | 49.6 | 10.7 | 111 | 127 | 13.4 | 115 | 107 | 7.2 | 75 - 125 | 30 | l |
| Beryllium | BRL | 0.39 | 0.36 | NC | 103 | 109 | 5.7 | 103 | 101 | 2.0 | 75 - 125 | 30 | |
| Cadmium | BRL | 0.30 | 0.27 | NC | 90.9 | 94.9 | 4.3 | 97.0 | 97.3 | 0.3 | 75 - 125 | 30 | |
| Calcium | BRL | 19800 | 19100 | 3.60 | 105 | 108 | 2.8 | NC | NC | NC | 75 - 125 | 30 | |
| Chromium | BRL | 19.8 | 15.2 | 26.3 | 107 | 114 | 6.3 | 104 | 103 | 1.0 | 75 - 125 | 30 | |
| Cobalt | BRL | 6.10 | 5.55 | 9.40 | 92.6 | 97.4 | 5.1 | 103 | 102 | 1.0 | 75 - 125 | 30 | |
| Copper | BRL | 23.4 | 22.0 | 6.20 | 98.5 | 104 | 5.4 | 123 | 117 | 5.0 | 75 - 125 | 30 | |
| Iron | BRL | 18400 | 15300 | 18.4 | 95.4 | 104 | 8.6 | NC | NC | NC | 75 - 125 | 30 | |
| Lead | BRL | 44.9 | 48.9 | 8.50 | 95.0 | 100 | 5.1 | 101 | 99.1 | 1.9 | 75 - 125 | 30 | |
| Magnesium | BRL | 3220 | 2870 | 11.5 | 107 | 114 | 6.3 | NC | NC | NC | 75 - 125 | 30 | |
| Manganese | BRL | 355 | 309 | 13.9 | 110 | 115 | 4.4 | 104 | >130 | NC | 75 - 125 | 30 | m |
| Nickel | BRL | 13.1 | 12.1 | 7.90 | 104 | 107 | 2.8 | 99.8 | 100 | 0.2 | 75 - 125 | 30 | |
| Potassium | BRL | 906 | 858 | 5.40 | 98.9 | 107 | 7.9 | >130 | >130 | NC | 75 - 125 | 30 | m |
| Selenium | BRL | <1.4 | <1.4 | NC | 89.1 | 96.5 | 8.0 | 83.5 | 85.2 | 2.0 | 75 - 125 | 30 | |
| Silver | BRL | <0.36 | <0.34 | NC | 105 | 111 | 5.6 | 108 | 108 | 0.0 | 75 - 125 | 30 | |
| Sodium | BRL | 98 | 102 | 4.00 | 107 | 115 | 7.2 | 130 | 114 | 13.1 | 75 - 125 | 30 | m |
| Thallium | BRL | <1.4 | <3.1 | NC | 102 | 111 | 8.5 | 103 | 103 | 0.0 | 75 - 125 | 30 | |
| Vanadium | BRL | 27.2 | 21.8 | 22.0 | 117 | 122 | 4.2 | 108 | 105 | 2.8 | 75 - 125 | 30 | |
| Zinc | BRL | 153 | 172 | 11.7 | 92.7 | 97.9 | 5.5 | 105 | 104 | 1.0 | 75 - 125 | 30 | |

l = This parameter is outside laboratory lcs/lcsd specified recovery limits.
m = This parameter is outside laboratory ms/msd specified recovery limits.
r = This parameter is outside laboratory rpd specified recovery limits.

PHOENIX

Environmental Laboratories, Inc.
587 East Middle Turnpike, P.O.Box 370, Manchester, CT 06045
Tel. (860) 645-1102 Fax (860) 645-0823

ACCREDITED IN ACCORDANCE WITH nelac
NY # 11301

# QA/QC Report

March 16, 2015

## QA/QC Data

SDG I.D.: GBH79483

| Parameter | Blank | Sample Result | Dup Result | Dup RPD | LCS % | LCSD % | LCS RPD | MS % | MSD % | MS RPD | % Rec Limits | % RPD Limits |
|---|---|---|---|---|---|---|---|---|---|---|---|---|
| QA/QC Batch 300799, QC Sample No: BH78389 (BH79483, BH79484, BH79485, BH79486, BH79487, BH79488, BH79489) | | | | | | | | | | | | |
| Total Cyanide (SW9010C Distillation) | BRL | 2.93 | 3.36 | 13.7 | 103 | | | 101 | | | 85 - 115 | 30 |

PHOENIX

Environmental Laboratories, Inc.
587 East Middle Turnpike, P.O.Box 370, Manchester, CT 06045
Tel. (860) 645-1102 Fax (860) 645-0823

ACCREDITED IN ACCORDANCE WITH nelac NY # 11301

# QA/QC Report

March 16, 2015

## QA/QC Data

SDG I.D.: GBH79483

| Parameter | Blank | LCS % | LCSD % | LCS RPD | MS % | MSD % | MS RPD | % Rec Limits | % RPD Limits | |
|---|---|---|---|---|---|---|---|---|---|---|
| QA/QC Batch 300653, QC Sample No: BH78913 (BH79483, BH79484, BH79485, BH79486, BH79487, BH79488, BH79489) | | | | | | | | | | |
| **Polychlorinated Biphenyls - Soil** | | | | | | | | | | |
| PCB-1016 | ND | 96 | 100 | 4.1 | 85 | 98 | 14.2 | 40 - 140 | 30 | |
| PCB-1221 | ND | | | | | | | 40 - 140 | 30 | |
| PCB-1232 | ND | | | | | | | 40 - 140 | 30 | |
| PCB-1242 | ND | | | | | | | 40 - 140 | 30 | |
| PCB-1248 | ND | | | | | | | 40 - 140 | 30 | |
| PCB-1254 | ND | | | | | | | 40 - 140 | 30 | |
| PCB-1260 | ND | 96 | 103 | 7.0 | 84 | 96 | 13.3 | 40 - 140 | 30 | |
| PCB-1262 | ND | | | | | | | 40 - 140 | 30 | |
| PCB-1268 | ND | | | | | | | 40 - 140 | 30 | |
| % DCBP (Surrogate Rec) | 92 | 117 | 125 | 6.6 | 87 | 100 | 13.9 | 30 - 150 | 30 | |
| % TCMX (Surrogate Rec) | 59 | 99 | 103 | 4.0 | 86 | 94 | 8.9 | 30 - 150 | 30 | |
| QA/QC Batch 300652, QC Sample No: BH78913 (BH79483, BH79484, BH79485, BH79486, BH79487, BH79488, BH79489) | | | | | | | | | | |
| **Semivolatiles - Soil** | | | | | | | | | | |
| 1,1-Biphenyl | ND | 78 | 78 | 0.0 | 60 | 60 | 0.0 | 30 - 130 | 30 | |
| 1,2,4,5-Tetrachlorobenzene | ND | 77 | 77 | 0.0 | 58 | 59 | 1.7 | 30 - 130 | 30 | |
| 2,3,4,6-tetrachlorophenol | ND | 100 | 97 | 3.0 | 73 | 77 | 5.3 | 30 - 130 | 30 | |
| 2,4,5-Trichlorophenol | ND | 85 | 87 | 2.3 | 65 | 68 | 4.5 | 30 - 130 | 30 | |
| 2,4,6-Trichlorophenol | ND | 86 | 87 | 1.2 | 64 | 66 | 3.1 | 30 - 130 | 30 | |
| 2,4-Dichlorophenol | ND | 81 | 83 | 2.4 | 61 | 61 | 0.0 | 30 - 130 | 30 | |
| 2,4-Dimethylphenol | ND | 78 | 78 | 0.0 | 63 | 64 | 1.6 | 30 - 130 | 30 | |
| 2,4-Dinitrophenol | ND | 33 | 31 | 6.3 | 90 | 70 | 25.0 | 30 - 130 | 30 | |
| 2,4-Dinitrotoluene | ND | 99 | 97 | 2.0 | 69 | 70 | 1.4 | 30 - 130 | 30 | |
| 2,6-Dinitrotoluene | ND | 91 | 90 | 1.1 | 64 | 65 | 1.6 | 30 - 130 | 30 | |
| 2-Chloronaphthalene | ND | 80 | 81 | 1.2 | 63 | 63 | 0.0 | 30 - 130 | 30 | |
| 2-Chlorophenol | ND | 78 | 78 | 0.0 | 58 | 59 | 1.7 | 30 - 130 | 30 | |
| 2-Methylnaphthalene | ND | 76 | 77 | 1.3 | 58 | 59 | 1.7 | 30 - 130 | 30 | |
| 2-Methylphenol (o-cresol) | ND | 75 | 75 | 0.0 | 60 | 58 | 3.4 | 30 - 130 | 30 | |
| 2-Nitroaniline | ND | 144 | 146 | 1.4 | 104 | 102 | 1.9 | 30 - 130 | 30 | l |
| 2-Nitrophenol | ND | 86 | 85 | 1.2 | 65 | 66 | 1.5 | 30 - 130 | 30 | |
| 3&4-Methylphenol (m&p-cresol) | ND | 77 | 77 | 0.0 | 57 | 57 | 0.0 | 30 - 130 | 30 | |
| 3,3'-Dichlorobenzidine | ND | 63 | 62 | 1.6 | 42 | 44 | 4.7 | 30 - 130 | 30 | |
| 3-Nitroaniline | ND | 77 | 74 | 4.0 | 56 | 55 | 1.8 | 30 - 130 | 30 | |
| 4,6-Dinitro-2-methylphenol | ND | 61 | 59 | 3.3 | 114 | 83 | 31.5 | 30 - 130 | 30 | r |
| 4-Bromophenyl phenyl ether | ND | 75 | 74 | 1.3 | 54 | 55 | 1.8 | 30 - 130 | 30 | |
| 4-Chloro-3-methylphenol | ND | 83 | 83 | 0.0 | 62 | 65 | 4.7 | 30 - 130 | 30 | |
| 4-Chloroaniline | ND | 45 | 46 | 2.2 | 27 | 29 | 7.1 | 30 - 130 | 30 | m |
| 4-Chlorophenyl phenyl ether | ND | 85 | 84 | 1.2 | 62 | 62 | 0.0 | 30 - 130 | 30 | |
| 4-Nitroaniline | ND | 93 | 92 | 1.1 | 70 | 70 | 0.0 | 30 - 130 | 30 | |
| 4-Nitrophenol | ND | 136 | 132 | 3.0 | 96 | 97 | 1.0 | 30 - 130 | 30 | l |
| Acenaphthene | ND | 85 | 85 | 0.0 | 64 | 64 | 0.0 | 30 - 130 | 30 | |
| Acenaphthylene | ND | 81 | 83 | 2.4 | 62 | 63 | 1.6 | 30 - 130 | 30 | |

# QA/QC Data

SDG I.D.: GBH79483

| Parameter | Blank | LCS % | LCSD % | LCS RPD | MS % | MSD % | MS RPD | % Rec Limits | % RPD Limits | |
|---|---|---|---|---|---|---|---|---|---|---|
| Acetophenone | ND | 81 | 82 | 1.2 | 61 | 62 | 1.6 | 30 - 130 | 30 | |
| Anthracene | ND | 87 | 89 | 2.3 | 68 | 68 | 0.0 | 30 - 130 | 30 | |
| Atrazine | ND | 95 | 93 | 2.1 | 73 | 70 | 4.2 | 30 - 130 | 30 | |
| Benz(a)anthracene | ND | 89 | 89 | 0.0 | 64 | 64 | 0.0 | 30 - 130 | 30 | |
| Benzaldehyde | ND | 133 | 134 | 0.7 | 148 | 148 | 0.0 | 30 - 130 | 30 | l,m |
| Benzo(a)pyrene | ND | 88 | 87 | 1.1 | 62 | 61 | 1.6 | 30 - 130 | 30 | |
| Benzo(b)fluoranthene | ND | 87 | 87 | 0.0 | 59 | 58 | 1.7 | 30 - 130 | 30 | |
| Benzo(ghi)perylene | ND | 80 | 81 | 1.2 | 61 | 65 | 6.3 | 30 - 130 | 30 | |
| Benzo(k)fluoranthene | ND | 88 | 88 | 0.0 | 66 | 65 | 1.5 | 30 - 130 | 30 | |
| Benzyl butyl phthalate | ND | 86 | 84 | 2.4 | 67 | 69 | 2.9 | 30 - 130 | 30 | |
| Bis(2-chloroethoxy)methane | ND | 81 | 82 | 1.2 | 60 | 61 | 1.7 | 30 - 130 | 30 | |
| Bis(2-chloroethyl)ether | ND | 63 | 62 | 1.6 | 51 | 53 | 3.8 | 30 - 130 | 30 | |
| Bis(2-chloroisopropyl)ether | ND | 71 | 71 | 0.0 | 52 | 52 | 0.0 | 30 - 130 | 30 | |
| Bis(2-ethylhexyl)phthalate | ND | 84 | 84 | 0.0 | 64 | 64 | 0.0 | 30 - 130 | 30 | |
| Caprolactam | ND | 86 | 84 | 2.4 | 57 | 58 | 1.7 | 30 - 130 | 30 | |
| Carbazole | ND | 110 | 112 | 1.8 | 85 | 82 | 3.6 | 30 - 130 | 30 | |
| Chrysene | ND | 93 | 92 | 1.1 | 67 | 65 | 3.0 | 30 - 130 | 30 | |
| Dibenz(a,h)anthracene | ND | 79 | 79 | 0.0 | 62 | 64 | 3.2 | 30 - 130 | 30 | |
| Dibenzofuran | ND | 86 | 86 | 0.0 | 64 | 64 | 0.0 | 30 - 130 | 30 | |
| Diethyl phthalate | ND | 95 | 93 | 2.1 | 67 | 67 | 0.0 | 30 - 130 | 30 | |
| Dimethylphthalate | ND | 89 | 87 | 2.3 | 64 | 64 | 0.0 | 30 - 130 | 30 | |
| Di-n-butylphthalate | ND | 91 | 92 | 1.1 | 66 | 63 | 4.7 | 30 - 130 | 30 | |
| Di-n-octylphthalate | ND | 86 | 86 | 0.0 | 57 | 58 | 1.7 | 30 - 130 | 30 | |
| Fluoranthene | ND | 96 | 96 | 0.0 | 71 | 67 | 5.8 | 30 - 130 | 30 | |
| Fluorene | ND | 90 | 89 | 1.1 | 67 | 68 | 1.5 | 30 - 130 | 30 | |
| Hexachlorobenzene | ND | 77 | 74 | 4.0 | 56 | 56 | 0.0 | 30 - 130 | 30 | |
| Hexachlorobutadiene | ND | 77 | 76 | 1.3 | 57 | 57 | 0.0 | 30 - 130 | 30 | |
| Hexachlorocyclopentadiene | ND | 72 | 74 | 2.7 | 33 | 21 | 44.4 | 30 - 130 | 30 | m,r |
| Hexachloroethane | ND | 67 | 67 | 0.0 | 47 | 46 | 2.2 | 30 - 130 | 30 | |
| Indeno(1,2,3-cd)pyrene | ND | 66 | 67 | 1.5 | 51 | 53 | 3.8 | 30 - 130 | 30 | |
| Isophorone | ND | 74 | 74 | 0.0 | 55 | 56 | 1.8 | 30 - 130 | 30 | |
| Naphthalene | ND | 78 | 78 | 0.0 | 59 | 60 | 1.7 | 30 - 130 | 30 | |
| Nitrobenzene | ND | 76 | 76 | 0.0 | 56 | 57 | 1.8 | 30 - 130 | 30 | |
| N-Nitrosodimethylamine | ND | 68 | 68 | 0.0 | 44 | 43 | 2.3 | 30 - 130 | 30 | |
| N-Nitrosodi-n-propylamine | ND | 76 | 78 | 2.6 | 58 | 57 | 1.7 | 30 - 130 | 30 | |
| N-Nitrosodiphenylamine | ND | 98 | 94 | 4.2 | 69 | 71 | 2.9 | 30 - 130 | 30 | |
| Pentachlorophenol | ND | 86 | 88 | 2.3 | 77 | 72 | 6.7 | 30 - 130 | 30 | |
| Phenanthrene | ND | 87 | 85 | 2.3 | 63 | 62 | 1.6 | 30 - 130 | 30 | |
| Phenol | ND | 77 | 78 | 1.3 | 55 | 56 | 1.8 | 30 - 130 | 30 | |
| Pyrene | ND | 97 | 96 | 1.0 | 70 | 67 | 4.4 | 30 - 130 | 30 | |
| % 2,4,6-Tribromophenol | 57 | 79 | 76 | 3.9 | 60 | 61 | 1.7 | 30 - 130 | 30 | |
| % 2-Fluorobiphenyl | 49 | 76 | 77 | 1.3 | 56 | 56 | 0.0 | 30 - 130 | 30 | |
| % 2-Fluorophenol | 44 | 73 | 72 | 1.4 | 50 | 50 | 0.0 | 30 - 130 | 30 | |
| % Nitrobenzene-d5 | 46 | 71 | 70 | 1.4 | 50 | 51 | 2.0 | 30 - 130 | 30 | |
| % Phenol-d5 | 49 | 76 | 76 | 0.0 | 51 | 52 | 1.9 | 30 - 130 | 30 | |
| % Terphenyl-d14 | 58 | 96 | 96 | 0.0 | 69 | 66 | 4.4 | 30 - 130 | 30 | |

**Comment:**

Additional 8270 criteria: 20% of compounds can be outside of acceptance criteria as long as recovery is at least 10%. (Acid surrogates acceptance range for aqueous samples: 15-110%, for soils 30-130%)

QA/QC Batch 300959, QC Sample No: BH79121 (BH79483)

## Volatiles (TCL) - Soil

| | | | | | | | | | | |
|---|---|---|---|---|---|---|---|---|---|---|
| 1,1,1-Trichloroethane | ND | 112 | 115 | 2.6 | 103 | 105 | 1.9 | 70 - 130 | 30 | |

# QA/QC Data

SDG I.D.: GBH79483

| Parameter | Blank | LCS % | LCSD % | LCS RPD | MS % | MSD % | MS RPD | % Rec Limits | % RPD Limits | |
|---|---|---|---|---|---|---|---|---|---|---|
| 1,1,2,2-Tetrachloroethane | ND | 136 | 138 | 1.5 | 115 | 122 | 5.9 | 70 - 130 | 30 | l |
| 1,1,2-Trichloroethane | ND | 108 | 110 | 1.8 | 99 | 101 | 2.0 | 70 - 130 | 30 | |
| 1,1-Dichloroethane | ND | 115 | 118 | 2.6 | 106 | 111 | 4.6 | 70 - 130 | 30 | |
| 1,1-Dichloroethene | ND | 112 | 118 | 5.2 | 85 | 87 | 2.3 | 70 - 130 | 30 | |
| 1,2,3-Trichlorobenzene | ND | 115 | 115 | 0.0 | 104 | 110 | 5.6 | 70 - 130 | 30 | |
| 1,2,4-Trichlorobenzene | ND | 113 | 110 | 2.7 | 105 | 109 | 3.7 | 70 - 130 | 30 | |
| 1,2-Dibromo-3-chloropropane | ND | 120 | 119 | 0.8 | 100 | 108 | 7.7 | 70 - 130 | 30 | |
| 1,2-Dibromoethane | ND | 112 | 113 | 0.9 | 96 | 101 | 5.1 | 70 - 130 | 30 | |
| 1,2-Dichlorobenzene | ND | 115 | 114 | 0.9 | 106 | 110 | 3.7 | 70 - 130 | 30 | |
| 1,2-Dichloroethane | ND | 105 | 107 | 1.9 | 95 | 96 | 1.0 | 70 - 130 | 30 | |
| 1,2-Dichloropropane | ND | 115 | 117 | 1.7 | 104 | 109 | 4.7 | 70 - 130 | 30 | |
| 1,3-Dichlorobenzene | ND | 116 | 116 | 0.0 | 108 | 113 | 4.5 | 70 - 130 | 30 | |
| 1,4-Dichlorobenzene | ND | 121 | 121 | 0.0 | 116 | 119 | 2.6 | 70 - 130 | 30 | |
| 1,4-dioxane | ND | 118 | 117 | 0.9 | 111 | 112 | 0.9 | 70 - 130 | 30 | |
| 2-Hexanone | ND | 110 | 110 | 0.0 | 96 | 106 | 9.9 | 70 - 130 | 30 | |
| 4-Methyl-2-pentanone | ND | 108 | 110 | 1.8 | 96 | 104 | 8.0 | 70 - 130 | 30 | |
| Acetone | ND | 95 | 103 | 8.1 | 63 | 67 | 6.2 | 70 - 130 | 30 | m |
| Benzene | ND | 115 | 117 | 1.7 | 105 | 108 | 2.8 | 70 - 130 | 30 | |
| Bromochloromethane | ND | 116 | 114 | 1.7 | 100 | 103 | 3.0 | 70 - 130 | 30 | |
| Bromodichloromethane | ND | 115 | 117 | 1.7 | 96 | 99 | 3.1 | 70 - 130 | 30 | |
| Bromoform | ND | 109 | 112 | 2.7 | 88 | 91 | 3.4 | 70 - 130 | 30 | |
| Bromomethane | ND | 102 | 104 | 1.9 | 66 | 73 | 10.1 | 70 - 130 | 30 | m |
| Carbon Disulfide | ND | 133 | 136 | 2.2 | 86 | 90 | 4.5 | 70 - 130 | 30 | l |
| Carbon tetrachloride | ND | 108 | 109 | 0.9 | 94 | 101 | 7.2 | 70 - 130 | 30 | |
| Chlorobenzene | ND | 116 | 118 | 1.7 | 107 | 111 | 3.7 | 70 - 130 | 30 | |
| Chloroethane | ND | 99 | 103 | 4.0 | 42 | 43 | 2.4 | 70 - 130 | 30 | m |
| Chloroform | ND | 113 | 114 | 0.9 | 92 | 94 | 2.2 | 70 - 130 | 30 | |
| Chloromethane | ND | 111 | 118 | 6.1 | 111 | 115 | 3.5 | 70 - 130 | 30 | |
| cis-1,2-Dichloroethene | ND | 117 | 119 | 1.7 | 106 | 110 | 3.7 | 70 - 130 | 30 | |
| cis-1,3-Dichloropropene | ND | 120 | 121 | 0.8 | 102 | 106 | 3.8 | 70 - 130 | 30 | |
| Cyclohexane | ND | 109 | 111 | 1.8 | 113 | 116 | 2.6 | 70 - 130 | 30 | |
| Dibromochloromethane | ND | 115 | 116 | 0.9 | 91 | 98 | 7.4 | 70 - 130 | 30 | |
| Dichlorodifluoromethane | ND | 112 | 113 | 0.9 | 110 | 115 | 4.4 | 70 - 130 | 30 | |
| Ethylbenzene | ND | 117 | 120 | 2.5 | 108 | 114 | 5.4 | 70 - 130 | 30 | |
| Isopropylbenzene | ND | 119 | 120 | 0.8 | 113 | 119 | 5.2 | 70 - 130 | 30 | |
| m&p-Xylene | ND | 114 | 118 | 3.4 | 108 | 112 | 3.6 | 70 - 130 | 30 | |
| Methyl ethyl ketone | ND | 110 | 104 | 5.6 | 90 | 93 | 3.3 | 70 - 130 | 30 | |
| Methyl t-butyl ether (MTBE) | ND | 110 | 110 | 0.0 | 91 | 95 | 4.3 | 70 - 130 | 30 | |
| Methylacetate | ND | 115 | 119 | 3.4 | 113 | 115 | 1.8 | 70 - 130 | 30 | |
| Methylcyclohexane | ND | 111 | 113 | 1.8 | 107 | 110 | 2.8 | 70 - 130 | 30 | |
| Methylene chloride | ND | 105 | 108 | 2.8 | 92 | 97 | 5.3 | 70 - 130 | 30 | |
| o-Xylene | ND | 117 | 119 | 1.7 | 109 | 114 | 4.5 | 70 - 130 | 30 | |
| Styrene | ND | 117 | 118 | 0.9 | 109 | 112 | 2.7 | 70 - 130 | 30 | |
| Tetrachloroethene | ND | 114 | 115 | 0.9 | 104 | 110 | 5.6 | 70 - 130 | 30 | |
| Toluene | ND | 112 | 115 | 2.6 | 104 | 108 | 3.8 | 70 - 130 | 30 | |
| trans-1,2-Dichloroethene | ND | 122 | 123 | 0.8 | 107 | 111 | 3.7 | 70 - 130 | 30 | |
| trans-1,3-Dichloropropene | ND | 120 | 120 | 0.0 | 99 | 101 | 2.0 | 70 - 130 | 30 | |
| Trichloroethene | ND | 108 | 111 | 2.7 | 99 | 104 | 4.9 | 70 - 130 | 30 | |
| Trichlorofluoromethane | ND | 106 | 110 | 3.7 | 29 | 30 | 3.4 | 70 - 130 | 30 | m |
| Trichlorotrifluoroethane | ND | 114 | 115 | 0.9 | 89 | 92 | 3.3 | 70 - 130 | 30 | |
| Vinyl chloride | ND | 112 | 115 | 2.6 | 117 | 121 | 3.4 | 70 - 130 | 30 | |
| % 1,2-dichlorobenzene-d4 | 100 | 100 | 101 | 1.0 | 99 | 100 | 1.0 | 70 - 130 | 30 | |
| % Bromofluorobenzene | 95 | 100 | 100 | 0.0 | 98 | 98 | 0.0 | 70 - 130 | 30 | |

# QA/QC Data

SDG I.D.: GBH79483

| Parameter | Blank | LCS % | LCSD % | LCS RPD | MS % | MSD % | MS RPD | % Rec Limits | % RPD Limits | |
|---|---|---|---|---|---|---|---|---|---|---|
| % Dibromofluoromethane | 99 | 99 | 101 | 2.0 | 96 | 97 | 1.0 | 70 - 130 | 30 | |
| % Toluene-d8 | 96 | 101 | 101 | 0.0 | 100 | 100 | 0.0 | 70 - 130 | 30 | |

**Comment:**

Additional 8260 criteria: 10% of LCS/LCSD compounds can be outside of acceptance criteria as long as recovery is 40-160%.

QA/QC Batch 300886, QC Sample No: BH79488 (BH79484 (1X, 25X) , BH79485 (1X, 28X) , BH79486, BH79487 (1X, 29X) , BH79488)

## Volatiles (TCL) - Soil

| | | | | | | | | | | |
|---|---|---|---|---|---|---|---|---|---|---|
| 1,1,1-Trichloroethane | ND | 113 | 110 | 2.7 | 96 | 97 | 1.0 | 70 - 130 | 30 | |
| 1,1,2,2-Tetrachloroethane | ND | 125 | 120 | 4.1 | 99 | 99 | 0.0 | 70 - 130 | 30 | |
| 1,1,2-Trichloroethane | ND | 113 | 111 | 1.8 | 96 | 96 | 0.0 | 70 - 130 | 30 | |
| 1,1-Dichloroethane | ND | 128 | 123 | 4.0 | 111 | 114 | 2.7 | 70 - 130 | 30 | |
| 1,1-Dichloroethene | ND | 116 | 109 | 6.2 | 83 | 83 | 0.0 | 70 - 130 | 30 | |
| 1,2,3-Trichlorobenzene | ND | 90 | 82 | 9.3 | 78 | 78 | 0.0 | 70 - 130 | 30 | |
| 1,2,4-Trichlorobenzene | ND | 86 | 80 | 7.2 | 79 | 76 | 3.9 | 70 - 130 | 30 | |
| 1,2-Dibromo-3-chloropropane | ND | 113 | 111 | 1.8 | 86 | 85 | 1.2 | 70 - 130 | 30 | |
| 1,2-Dibromoethane | ND | 119 | 116 | 2.6 | 98 | 99 | 1.0 | 70 - 130 | 30 | |
| 1,2-Dichlorobenzene | ND | 95 | 88 | 7.7 | 83 | 82 | 1.2 | 70 - 130 | 30 | |
| 1,2-Dichloroethane | ND | 110 | 107 | 2.8 | 94 | 94 | 0.0 | 70 - 130 | 30 | |
| 1,2-Dichloropropane | ND | 123 | 118 | 4.1 | 106 | 107 | 0.9 | 70 - 130 | 30 | |
| 1,3-Dichlorobenzene | ND | 94 | 87 | 7.7 | 84 | 80 | 4.9 | 70 - 130 | 30 | |
| 1,4-Dichlorobenzene | ND | 90 | 83 | 8.1 | 82 | 79 | 3.7 | 70 - 130 | 30 | |
| 1,4-dioxane | ND | 126 | 105 | 18.2 | 80 | 107 | 28.9 | 70 - 130 | 30 | |
| 2-Hexanone | ND | 99 | 98 | 1.0 | 82 | 84 | 2.4 | 70 - 130 | 30 | |
| 4-Methyl-2-pentanone | ND | 118 | 118 | 0.0 | 92 | 93 | 1.1 | 70 - 130 | 30 | |
| Acetone | ND | 91 | 96 | 5.3 | 50 | 68 | 30.5 | 70 - 130 | 30 | m |
| Benzene | ND | 120 | 115 | 4.3 | 104 | 103 | 1.0 | 70 - 130 | 30 | |
| Bromochloromethane | ND | 114 | 108 | 5.4 | 93 | 94 | 1.1 | 70 - 130 | 30 | |
| Bromodichloromethane | ND | 117 | 111 | 5.3 | 93 | 94 | 1.1 | 70 - 130 | 30 | |
| Bromoform | ND | 87 | 87 | 0.0 | 61 | 64 | 4.8 | 70 - 130 | 30 | m |
| Bromomethane | ND | 93 | 85 | 9.0 | 54 | 58 | 7.1 | 70 - 130 | 30 | m |
| Carbon Disulfide | ND | 132 | 127 | 3.9 | 85 | 86 | 1.2 | 70 - 130 | 30 | l |
| Carbon tetrachloride | ND | 112 | 107 | 4.6 | 90 | 89 | 1.1 | 70 - 130 | 30 | |
| Chlorobenzene | ND | 97 | 94 | 3.1 | 87 | 87 | 0.0 | 70 - 130 | 30 | |
| Chloroethane | ND | 119 | 111 | 7.0 | 25 | 24 | 4.1 | 70 - 130 | 30 | m |
| Chloroform | ND | 114 | 110 | 3.6 | 99 | 99 | 0.0 | 70 - 130 | 30 | |
| Chloromethane | ND | 117 | 113 | 3.5 | 106 | 107 | 0.9 | 70 - 130 | 30 | |
| cis-1,2-Dichloroethene | ND | 123 | 127 | 3.2 | 105 | 105 | 0.0 | 70 - 130 | 30 | |
| cis-1,3-Dichloropropene | ND | 127 | 123 | 3.2 | 104 | 104 | 0.0 | 70 - 130 | 30 | |
| Cyclohexane | ND | 113 | 109 | 3.6 | 112 | 113 | 0.9 | 70 - 130 | 30 | |
| Dibromochloromethane | ND | 101 | 99 | 2.0 | 76 | 79 | 3.9 | 70 - 130 | 30 | |
| Dichlorodifluoromethane | ND | 104 | 101 | 2.9 | 89 | 95 | 6.5 | 70 - 130 | 30 | |
| Ethylbenzene | ND | 102 | 98 | 4.0 | 90 | 89 | 1.1 | 70 - 130 | 30 | |
| Isopropylbenzene | ND | 109 | 101 | 7.6 | 93 | 93 | 0.0 | 70 - 130 | 30 | |
| m&p-Xylene | ND | 98 | 92 | 6.3 | 87 | 87 | 0.0 | 70 - 130 | 30 | |
| Methyl ethyl ketone | ND | 106 | 113 | 6.4 | 82 | 80 | 2.5 | 70 - 130 | 30 | |
| Methyl t-butyl ether (MTBE) | ND | 111 | 103 | 7.5 | 82 | 84 | 2.4 | 70 - 130 | 30 | |
| Methylacetate | ND | 130 | 130 | 0.0 | 166 | 162 | 2.4 | 70 - 130 | 30 | m |
| Methylcyclohexane | ND | 108 | 106 | 1.9 | 103 | 103 | 0.0 | 70 - 130 | 30 | |
| Methylene chloride | ND | 109 | 105 | 3.7 | 88 | 90 | 2.2 | 70 - 130 | 30 | |
| o-Xylene | ND | 103 | 100 | 3.0 | 91 | 91 | 0.0 | 70 - 130 | 30 | |
| Styrene | ND | 101 | 96 | 5.1 | 90 | 90 | 0.0 | 70 - 130 | 30 | |
| Tetrachloroethene | ND | 87 | 83 | 4.7 | 79 | 77 | 2.6 | 70 - 130 | 30 | |

| Parameter | Blank | LCS % | LCSD % | LCS RPD | MS % | MSD % | MS RPD | % Rec Limits | % RPD Limits | |
|---|---|---|---|---|---|---|---|---|---|---|
| Toluene | ND | 115 | 110 | 4.4 | 99 | 100 | 1.0 | 70 - 130 | 30 | |
| trans-1,2-Dichloroethene | ND | 114 | 109 | 4.5 | 94 | 96 | 2.1 | 70 - 130 | 30 | |
| trans-1,3-Dichloropropene | ND | 122 | 120 | 1.7 | 97 | 96 | 1.0 | 70 - 130 | 30 | |
| Trichloroethene | ND | 99 | 98 | 1.0 | 87 | 88 | 1.1 | 70 - 130 | 30 | |
| Trichlorofluoromethane | ND | 104 | 101 | 2.9 | 19 | 18 | 5.4 | 70 - 130 | 30 | m |
| Trichlorotrifluoroethane | ND | 113 | 110 | 2.7 | 86 | 88 | 2.3 | 70 - 130 | 30 | |
| Vinyl chloride | ND | 116 | 112 | 3.5 | 121 | 123 | 1.6 | 70 - 130 | 30 | |
| % 1,2-dichlorobenzene-d4 | 94 | 103 | 99 | 4.0 | 101 | 102 | 1.0 | 70 - 130 | 30 | |
| % Bromofluorobenzene | 102 | 111 | 107 | 3.7 | 111 | 110 | 0.9 | 70 - 130 | 30 | |
| % Dibromofluoromethane | 93 | 94 | 92 | 2.2 | 92 | 94 | 2.2 | 70 - 130 | 30 | |
| % Toluene-d8 | 96 | 109 | 109 | 0.0 | 109 | 108 | 0.9 | 70 - 130 | 30 | |

**Comment:**

Additional 8260 criteria: 10% of LCS/LCSD compounds can be outside of acceptance criteria as long as recovery is 40-160%.

QA/QC Batch 301096, QC Sample No: BH80067 (BH79489 (50X) )

## Volatiles (TCL) - Soil

| | | | | | | | | | | |
|---|---|---|---|---|---|---|---|---|---|---|
| 1,1,1-Trichloroethane | ND | 106 | 114 | 7.3 | 92 | | | 70 - 130 | 30 | |
| 1,1,2,2-Tetrachloroethane | ND | 106 | 117 | 9.9 | 89 | | | 70 - 130 | 30 | |
| 1,1,2-Trichloroethane | ND | 108 | 117 | 8.0 | 97 | | | 70 - 130 | 30 | |
| 1,1-Dichloroethane | ND | 102 | 109 | 6.6 | 88 | | | 70 - 130 | 30 | |
| 1,1-Dichloroethene | ND | 108 | 118 | 8.8 | 55 | | | 70 - 130 | 30 | m |
| 1,2,3-Trichlorobenzene | ND | 107 | 114 | 6.3 | 88 | | | 70 - 130 | 30 | |
| 1,2,4-Trichlorobenzene | ND | 108 | 115 | 6.3 | 91 | | | 70 - 130 | 30 | |
| 1,2-Dibromo-3-chloropropane | ND | 97 | 111 | 13.5 | 83 | | | 70 - 130 | 30 | |
| 1,2-Dibromoethane | ND | 108 | 116 | 7.1 | 97 | | | 70 - 130 | 30 | |
| 1,2-Dichlorobenzene | ND | 107 | 115 | 7.2 | 96 | | | 70 - 130 | 30 | |
| 1,2-Dichloroethane | ND | 102 | 111 | 8.5 | 89 | | | 70 - 130 | 30 | |
| 1,2-Dichloropropane | ND | 107 | 115 | 7.2 | 94 | | | 70 - 130 | 30 | |
| 1,3-Dichlorobenzene | ND | 107 | 114 | 6.3 | 97 | | | 70 - 130 | 30 | |
| 1,4-Dichlorobenzene | ND | 108 | 115 | 6.3 | 97 | | | 70 - 130 | 30 | |
| 1,4-dioxane | ND | 106 | 119 | 11.6 | 89 | | | 70 - 130 | 30 | |
| 2-Hexanone | ND | 93 | 105 | 12.1 | 81 | | | 70 - 130 | 30 | |
| 4-Methyl-2-pentanone | ND | 100 | 113 | 12.2 | 89 | | | 70 - 130 | 30 | |
| Acetone | ND | 94 | 104 | 10.1 | 63 | | | 70 - 130 | 30 | m |
| Benzene | ND | 107 | 114 | 6.3 | 95 | | | 70 - 130 | 30 | |
| Bromochloromethane | ND | 106 | 116 | 9.0 | 93 | | | 70 - 130 | 30 | |
| Bromodichloromethane | ND | 108 | 117 | 8.0 | 90 | | | 70 - 130 | 30 | |
| Bromoform | ND | 102 | 112 | 9.3 | 85 | | | 70 - 130 | 30 | |
| Bromomethane | ND | 96 | 107 | 10.8 | 60 | | | 70 - 130 | 30 | m |
| Carbon Disulfide | ND | 105 | 113 | 7.3 | 51 | | | 70 - 130 | 30 | m |
| Carbon tetrachloride | ND | 107 | 112 | 4.6 | 96 | | | 70 - 130 | 30 | |
| Chlorobenzene | ND | 108 | 114 | 5.4 | >200 | | | 70 - 130 | 30 | m |
| Chloroethane | ND | 85 | 89 | 4.6 | 23 | | | 70 - 130 | 30 | m |
| Chloroform | ND | 101 | 109 | 7.6 | 90 | | | 70 - 130 | 30 | |
| Chloromethane | ND | 84 | 93 | 10.2 | 89 | | | 70 - 130 | 30 | |
| cis-1,2-Dichloroethene | ND | 102 | 110 | 7.5 | 90 | | | 70 - 130 | 30 | |
| cis-1,3-Dichloropropene | ND | 110 | 117 | 6.2 | 92 | | | 70 - 130 | 30 | |
| Cyclohexane | ND | 97 | 105 | 7.9 | 93 | | | 70 - 130 | 30 | |
| Dibromochloromethane | ND | 108 | 117 | 8.0 | 88 | | | 70 - 130 | 30 | |
| Dichlorodifluoromethane | ND | 89 | 94 | 5.5 | 83 | | | 70 - 130 | 30 | |
| Ethylbenzene | ND | 108 | 115 | 6.3 | 92 | | | 70 - 130 | 30 | |
| Isopropylbenzene | ND | 105 | 110 | 4.7 | 96 | | | 70 - 130 | 30 | |
| m&p-Xylene | ND | 109 | 115 | 5.4 | 97 | | | 70 - 130 | 30 | |

# QA/QC Data

SDG I.D.: GBH79483

| Parameter | Blank | LCS % | LCSD % | LCS RPD | MS % | MSD % | MS RPD | % Rec Limits | % RPD Limits | |
|---|---|---|---|---|---|---|---|---|---|---|
| Methyl ethyl ketone | ND | 94 | 106 | 12.0 | 79 | | | 70 - 130 | 30 | |
| Methyl t-butyl ether (MTBE) | ND | 106 | 114 | 7.3 | 86 | | | 70 - 130 | 30 | |
| Methylacetate | ND | 93 | 107 | 14.0 | 75 | | | 70 - 130 | 30 | |
| Methylcyclohexane | ND | 107 | 113 | 5.5 | 95 | | | 70 - 130 | 30 | |
| Methylene chloride | ND | 86 | 92 | 6.7 | 72 | | | 70 - 130 | 30 | |
| o-Xylene | ND | 108 | 115 | 6.3 | 97 | | | 70 - 130 | 30 | |
| Styrene | ND | 107 | 113 | 5.5 | 95 | | | 70 - 130 | 30 | |
| Tetrachloroethene | ND | 111 | 119 | 7.0 | 102 | | | 70 - 130 | 30 | |
| Toluene | ND | 108 | 115 | 6.3 | 97 | | | 70 - 130 | 30 | |
| trans-1,2-Dichloroethene | ND | 112 | 118 | 5.2 | 93 | | | 70 - 130 | 30 | |
| trans-1,3-Dichloropropene | ND | 111 | 119 | 7.0 | 92 | | | 70 - 130 | 30 | |
| Trichloroethene | ND | 110 | 117 | 6.2 | 100 | | | 70 - 130 | 30 | |
| Trichlorofluoromethane | ND | 101 | 109 | 7.6 | 20 | | | 70 - 130 | 30 | m |
| Trichlorotrifluoroethane | ND | 110 | 119 | 7.9 | 61 | | | 70 - 130 | 30 | m |
| Vinyl chloride | ND | 93 | 102 | 9.2 | 90 | | | 70 - 130 | 30 | |
| % 1,2-dichlorobenzene-d4 | 98 | 100 | 100 | 0.0 | 99 | | | 70 - 130 | 30 | |
| % Bromofluorobenzene | 92 | 102 | 101 | 1.0 | 99 | | | 70 - 130 | 30 | |
| % Dibromofluoromethane | 100 | 100 | 104 | 3.9 | 102 | | | 70 - 130 | 30 | |
| % Toluene-d8 | 99 | 101 | 102 | 1.0 | 100 | | | 70 - 130 | 30 | |

**Comment:**

Additional 8260 criteria: 10% of LCS/LCSD compounds can be outside of acceptance criteria as long as recovery is 40-160%.

l = This parameter is outside laboratory lcs/lcsd specified recovery limits.
m = This parameter is outside laboratory ms/msd specified recovery limits.
r = This parameter is outside laboratory rpd specified recovery limits.

**If there are any questions regarding this data, please call Phoenix Client Services at extension 200.**

RPD - Relative Percent Difference
LCS - Laboratory Control Sample
LCSD - Laboratory Control Sample Duplicate
MS - Matrix Spike
MS Dup - Matrix Spike Duplicate
NC - No Criteria
Intf - Interference

Phyllis Shiller, Laboratory Director
March 16, 2015

# Sample Criteria Exceedences Report

## GBH79483 - HESNY-TUCK



Criteria: NY: 375, 375RRS, 375RS

State: NY

| SampNo | Acode | Phoenix Analyte | Criteria | Result | RL | Criteria | RL Criteria | Analysis Units |
|---|---|---|---|---|---|---|---|---|
| BH79483 | $8260_TCL_SM | Acetone | NY / 375-6.8 Volatiles / Unrestricted Use Soil | 62 | 81 | 50 | 50 | ug/kg |
| BH79483 | $8270_TCLR | Benz(a)anthracene | NY / 375-6.8 Semivolatiles / Residential | 5600 | 560 | 1000 | 1000 | ug/Kg |
| BH79483 | $8270_TCLR | Benz(a)anthracene | NY / 375-6.8 Semivolatiles / Residential Restricted | 5600 | 560 | 1000 | 1000 | ug/Kg |
| BH79483 | $8270_TCLR | Benz(a)anthracene | NY / 375-6.8 Semivolatiles / Unrestricted Use Soil | 5600 | 560 | 1000 | 1000 | ug/Kg |
| BH79483 | $8270_TCLR | Chrysene | NY / 375-6.8 Semivolatiles / Residential | 6000 | 560 | 1000 | 1000 | ug/Kg |
| BH79483 | $8270_TCLR | Chrysene | NY / 375-6.8 Semivolatiles / Residential Restricted | 6000 | 560 | 3900 | 3900 | ug/Kg |
| BH79483 | $8270_TCLR | Chrysene | NY / 375-6.8 Semivolatiles / Unrestricted Use Soil | 6000 | 560 | 1000 | 1000 | ug/Kg |
| BH79483 | $8270_TCLR | Benzo(b)fluoranthene | NY / 375-6.8 Semivolatiles / Residential | 7700 | 560 | 1000 | 1000 | ug/Kg |
| BH79483 | $8270_TCLR | Benzo(b)fluoranthene | NY / 375-6.8 Semivolatiles / Residential Restricted | 7700 | 560 | 1000 | 1000 | ug/Kg |
| BH79483 | $8270_TCLR | Benzo(b)fluoranthene | NY / 375-6.8 Semivolatiles / Unrestricted Use Soil | 7700 | 560 | 1000 | 1000 | ug/Kg |
| BH79483 | $8270_TCLR | Benzo(k)fluoranthene | NY / 375-6.8 Semivolatiles / Residential | 2500 | 560 | 1000 | 1000 | ug/Kg |
| BH79483 | $8270_TCLR | Benzo(k)fluoranthene | NY / 375-6.8 Semivolatiles / Unrestricted Use Soil | 2500 | 560 | 800 | 800 | ug/Kg |
| BH79483 | $8270_TCLR | Benzo(a)pyrene | NY / 375-6.8 Semivolatiles / Residential | 5800 | 560 | 1000 | 1000 | ug/Kg |
| BH79483 | $8270_TCLR | Benzo(a)pyrene | NY / 375-6.8 Semivolatiles / Residential Restricted | 5800 | 560 | 1000 | 1000 | ug/Kg |
| BH79483 | $8270_TCLR | Benzo(a)pyrene | NY / 375-6.8 Semivolatiles / Unrestricted Use Soil | 5800 | 560 | 1000 | 1000 | ug/Kg |
| BH79483 | $8270_TCLR | Indeno(1,2,3-cd)pyrene | NY / 375-6.8 Semivolatiles / Residential | 2700 | 560 | 500 | 500 | ug/Kg |
| BH79483 | $8270_TCLR | Indeno(1,2,3-cd)pyrene | NY / 375-6.8 Semivolatiles / Residential Restricted | 2700 | 560 | 500 | 500 | ug/Kg |
| BH79483 | $8270_TCLR | Indeno(1,2,3-cd)pyrene | NY / 375-6.8 Semivolatiles / Unrestricted Use Soil | 2700 | 560 | 500 | 500 | ug/Kg |
| BH79483 | $8270_TCLR | Dibenz(a,h)anthracene | NY / 375-6.8 Semivolatiles / Residential | 790 | 560 | 330 | 330 | ug/Kg |
| BH79483 | $8270_TCLR | Dibenz(a,h)anthracene | NY / 375-6.8 Semivolatiles / Residential Restricted | 790 | 560 | 330 | 330 | ug/Kg |
| BH79483 | $8270_TCLR | Dibenz(a,h)anthracene | NY / 375-6.8 Semivolatiles / Unrestricted Use Soil | 790 | 560 | 330 | 330 | ug/Kg |
| BH79483 | CR-SM | Chromium | NY / 375-6.8 Metals / Unrestricted Use Soil | 43.1 | 0.37 | 30 | | mg/Kg |
| BH79483 | PB-SM | Lead | NY / 375-6.8 Metals / Unrestricted Use Soil | 180 | 3.7 | 63 | 63 | mg/Kg |
| BH79483 | ZN-SM | Zinc | NY / 375-6.8 Metals / Unrestricted Use Soil | 258 | 3.7 | 109 | 109 | mg/Kg |
| BH79484 | $8260_TCL_SM | Acetone | NY / 375-6.8 Volatiles / Unrestricted Use Soil | 250 | 81 | 50 | 50 | ug/kg |
| BH79484 | $PCB_SMR | PCB-1260 | NY / 375-6.8 PCBs/Pesticides / Residential | 1100 | 410 | 1000 | 1000 | ug/Kg |
| BH79484 | $PCB_SMR | PCB-1242 | NY / 375-6.8 PCBs/Pesticides / Unrestricted Use Soil | ND | 410 | 100 | 100 | ug/Kg |
| BH79484 | $PCB_SMR | PCB-1260 | NY / 375-6.8 PCBs/Pesticides / Unrestricted Use Soil | 1100 | 410 | 100 | 100 | ug/Kg |
| BH79484 | $PCB_SMR | PCB-1248 | NY / 375-6.8 PCBs/Pesticides / Unrestricted Use Soil | ND | 410 | 100 | 100 | ug/Kg |
| BH79484 | $PCB_SMR | PCB-1232 | NY / 375-6.8 PCBs/Pesticides / Unrestricted Use Soil | ND | 410 | 100 | 100 | ug/Kg |
| BH79484 | $PCB_SMR | PCB-1221 | NY / 375-6.8 PCBs/Pesticides / Unrestricted Use Soil | ND | 410 | 100 | 100 | ug/Kg |
| BH79484 | $PCB_SMR | PCB-1016 | NY / 375-6.8 PCBs/Pesticides / Unrestricted Use Soil | ND | 410 | 100 | 100 | ug/Kg |
| BH79484 | $PCB_SMR | PCB-1254 | NY / 375-6.8 PCBs/Pesticides / Unrestricted Use Soil | ND | 410 | 100 | 100 | ug/Kg |
| BH79484 | CR-SM | Chromium | NY / 375-6.8 Metals / Unrestricted Use Soil | 36.5 | 0.39 | 30 | | mg/Kg |
| BH79484 | CU-SM | Copper | NY / 375-6.8 Metals / Unrestricted Use Soil | 150 | 3.9 | 50 | 50 | mg/kg |
| BH79484 | HG-SM | Mercury | NY / 375-6.8 Metals / Unrestricted Use Soil | 0.34 | 0.03 | 0.18 | 0.18 | mg/Kg |
| BH79484 | PB-SM | Lead | NY / 375-6.8 Metals / Residential | 419 | 3.9 | 400 | 400 | mg/Kg |
| BH79484 | PB-SM | Lead | NY / 375-6.8 Metals / Residential Restricted | 419 | 3.9 | 400 | 400 | mg/Kg |
| BH79484 | PB-SM | Lead | NY / 375-6.8 Metals / Unrestricted Use Soil | 419 | 3.9 | 63 | 63 | mg/Kg |
| BH79484 | ZN-SM | Zinc | NY / 375-6.8 Metals / Unrestricted Use Soil | 342 | 3.9 | 109 | 109 | mg/Kg |

# Sample Criteria Exceedences Report

## GBH79483 - HESNY-TUCK



Criteria: NY: 375, 375RRS, 375RS

State: NY

| SampNo | Acode | Phoenix Analyte | Criteria | Result | RL | Criteria | RL Criteria | Analysis Units |
|---|---|---|---|---|---|---|---|---|
| BH79485 | $8260_TCL_SM | Acetone | NY / 375-6.8 Volatiles / Unrestricted Use Soil | 220 | 81 | 50 | 50 | ug/kg |
| BH79485 | AS-SM | Arsenic | NY / 375-6.8 Metals / Residential | 25.1 | 1.0 | 16 | 16 | mg/Kg |
| BH79485 | AS-SM | Arsenic | NY / 375-6.8 Metals / Residential Restricted | 25.1 | 1.0 | 16 | 16 | mg/Kg |
| BH79485 | AS-SM | Arsenic | NY / 375-6.8 Metals / Unrestricted Use Soil | 25.1 | 1.0 | 13 | 13 | mg/Kg |
| BH79485 | BA-SM | Barium | NY / 375-6.8 Metals / Residential | 1120 | 0.51 | 350 | 350 | mg/Kg |
| BH79485 | BA-SM | Barium | NY / 375-6.8 Metals / Residential Restricted | 1120 | 0.51 | 400 | 400 | mg/Kg |
| BH79485 | BA-SM | Barium | NY / 375-6.8 Metals / Unrestricted Use Soil | 1120 | 0.51 | 350 | 350 | mg/Kg |
| BH79485 | CD-SM | Cadmium | NY / 375-6.8 Metals / Residential | 3.12 | 0.51 | 2.5 | 2.5 | mg/Kg |
| BH79485 | CD-SM | Cadmium | NY / 375-6.8 Metals / Unrestricted Use Soil | 3.12 | 0.51 | 2.5 | 2.5 | mg/Kg |
| BH79485 | CR-SM | Chromium | NY / 375-6.8 Metals / Unrestricted Use Soil | 82.0 | 0.51 | 30 | | mg/Kg |
| BH79485 | CU-SM | Copper | NY / 375-6.8 Metals / Unrestricted Use Soil | 69.0 | 0.51 | 50 | 50 | mg/kg |
| BH79485 | HG-SM | Mercury | NY / 375-6.8 Metals / Unrestricted Use Soil | 0.29 | 0.04 | 0.18 | 0.18 | mg/Kg |
| BH79485 | PB-SM | Lead | NY / 375-6.8 Metals / Residential | 589 | 5.1 | 400 | 400 | mg/Kg |
| BH79485 | PB-SM | Lead | NY / 375-6.8 Metals / Residential Restricted | 589 | 5.1 | 400 | 400 | mg/Kg |
| BH79485 | PB-SM | Lead | NY / 375-6.8 Metals / Unrestricted Use Soil | 589 | 5.1 | 63 | 63 | mg/Kg |
| BH79485 | ZN-SM | Zinc | NY / 375-6.8 Metals / Unrestricted Use Soil | 216 | 5.1 | 109 | 109 | mg/Kg |
| BH79486 | $8270_TCLR | Benz(a)anthracene | NY / 375-6.8 Semivolatiles / Residential | 1200 | 530 | 1000 | 1000 | ug/Kg |
| BH79486 | $8270_TCLR | Benz(a)anthracene | NY / 375-6.8 Semivolatiles / Residential Restricted | 1200 | 530 | 1000 | 1000 | ug/Kg |
| BH79486 | $8270_TCLR | Benz(a)anthracene | NY / 375-6.8 Semivolatiles / Unrestricted Use Soil | 1200 | 530 | 1000 | 1000 | ug/Kg |
| BH79486 | $8270_TCLR | Chrysene | NY / 375-6.8 Semivolatiles / Residential | 1200 | 530 | 1000 | 1000 | ug/Kg |
| BH79486 | $8270_TCLR | Chrysene | NY / 375-6.8 Semivolatiles / Unrestricted Use Soil | 1200 | 530 | 1000 | 1000 | ug/Kg |
| BH79486 | $8270_TCLR | Benzo(b)fluoranthene | NY / 375-6.8 Semivolatiles / Residential | 1500 | 530 | 1000 | 1000 | ug/Kg |
| BH79486 | $8270_TCLR | Benzo(b)fluoranthene | NY / 375-6.8 Semivolatiles / Residential Restricted | 1500 | 530 | 1000 | 1000 | ug/Kg |
| BH79486 | $8270_TCLR | Benzo(b)fluoranthene | NY / 375-6.8 Semivolatiles / Unrestricted Use Soil | 1500 | 530 | 1000 | 1000 | ug/Kg |
| BH79486 | $8270_TCLR | Benzo(a)pyrene | NY / 375-6.8 Semivolatiles / Residential | 1200 | 530 | 1000 | 1000 | ug/Kg |
| BH79486 | $8270_TCLR | Benzo(a)pyrene | NY / 375-6.8 Semivolatiles / Residential Restricted | 1200 | 530 | 1000 | 1000 | ug/Kg |
| BH79486 | $8270_TCLR | Benzo(a)pyrene | NY / 375-6.8 Semivolatiles / Unrestricted Use Soil | 1200 | 530 | 1000 | 1000 | ug/Kg |
| BH79486 | CU-SM | Copper | NY / 375-6.8 Metals / Unrestricted Use Soil | 60.7 | 0.36 | 50 | 50 | mg/kg |
| BH79487 | $8260_TCL_SM | Acetone | NY / 375-6.8 Volatiles / Unrestricted Use Soil | 61 | 81 | 50 | 50 | ug/kg |
| BH79487 | $8270_TCLR | Benz(a)anthracene | NY / 375-6.8 Semivolatiles / Residential | 2200 | 530 | 1000 | 1000 | ug/Kg |
| BH79487 | $8270_TCLR | Benz(a)anthracene | NY / 375-6.8 Semivolatiles / Residential Restricted | 2200 | 530 | 1000 | 1000 | ug/Kg |
| BH79487 | $8270_TCLR | Benz(a)anthracene | NY / 375-6.8 Semivolatiles / Unrestricted Use Soil | 2200 | 530 | 1000 | 1000 | ug/Kg |
| BH79487 | $8270_TCLR | Chrysene | NY / 375-6.8 Semivolatiles / Residential | 2300 | 530 | 1000 | 1000 | ug/Kg |
| BH79487 | $8270_TCLR | Chrysene | NY / 375-6.8 Semivolatiles / Unrestricted Use Soil | 2300 | 530 | 1000 | 1000 | ug/Kg |
| BH79487 | $8270_TCLR | Benzo(b)fluoranthene | NY / 375-6.8 Semivolatiles / Residential | 2900 | 530 | 1000 | 1000 | ug/Kg |
| BH79487 | $8270_TCLR | Benzo(b)fluoranthene | NY / 375-6.8 Semivolatiles / Residential Restricted | 2900 | 530 | 1000 | 1000 | ug/Kg |
| BH79487 | $8270_TCLR | Benzo(b)fluoranthene | NY / 375-6.8 Semivolatiles / Unrestricted Use Soil | 2900 | 530 | 1000 | 1000 | ug/Kg |
| BH79487 | $8270_TCLR | Benzo(k)fluoranthene | NY / 375-6.8 Semivolatiles / Residential | 1100 | 530 | 1000 | 1000 | ug/Kg |
| BH79487 | $8270_TCLR | Benzo(k)fluoranthene | NY / 375-6.8 Semivolatiles / Unrestricted Use Soil | 1100 | 530 | 800 | 800 | ug/Kg |
| BH79487 | $8270_TCLR | Benzo(a)pyrene | NY / 375-6.8 Semivolatiles / Residential | 2000 | 530 | 1000 | 1000 | ug/Kg |

# Sample Criteria Exceedences Report

## GBH79483 - HESNY-TUCK

Criteria: NY: 375, 375RRS, 375RS
State: NY

| SampNo | Acode | Phoenix Analyte | Criteria | Result | RL | Criteria | RL Criteria | Analysis Units |
|---|---|---|---|---|---|---|---|---|
| BH79487 | $8270_TCLR | Benzo(a)pyrene | NY / 375-6.8 Semivolatiles / Residential Restricted | 2000 | 530 | 1000 | 1000 | ug/Kg |
| BH79487 | $8270_TCLR | Benzo(a)pyrene | NY / 375-6.8 Semivolatiles / Unrestricted Use Soil | 2000 | 530 | 1000 | 1000 | ug/Kg |
| BH79488 | $8270_TCLR | Phenol | NY / 375-6.8 Semivolatiles / Unrestricted Use Soil | ND | 1300 | 330 | 330 | ug/Kg |
| BH79488 | $8270_TCLR | 2-Methylphenol (o-cresol) | NY / 375-6.8 Semivolatiles / Unrestricted Use Soil | ND | 1300 | 330 | 330 | ug/Kg |
| BH79488 | $8270_TCLR | Benz(a)anthracene | NY / 375-6.8 Semivolatiles / Residential | 4500 | 1300 | 1000 | 1000 | ug/Kg |
| BH79488 | $8270_TCLR | Benz(a)anthracene | NY / 375-6.8 Semivolatiles / Residential Restricted | 4500 | 1300 | 1000 | 1000 | ug/Kg |
| BH79488 | $8270_TCLR | Benz(a)anthracene | NY / 375-6.8 Semivolatiles / Unrestricted Use Soil | 4500 | 1300 | 1000 | 1000 | ug/Kg |
| BH79488 | $8270_TCLR | Chrysene | NY / 375-6.8 Semivolatiles / Residential | 4800 | 1300 | 1000 | 1000 | ug/Kg |
| BH79488 | $8270_TCLR | Chrysene | NY / 375-6.8 Semivolatiles / Residential Restricted | 4800 | 1300 | 3900 | 3900 | ug/Kg |
| BH79488 | $8270_TCLR | Chrysene | NY / 375-6.8 Semivolatiles / Unrestricted Use Soil | 4800 | 1300 | 1000 | 1000 | ug/Kg |
| BH79488 | $8270_TCLR | Benzo(b)fluoranthene | NY / 375-6.8 Semivolatiles / Residential | 5900 | 1300 | 1000 | 1000 | ug/Kg |
| BH79488 | $8270_TCLR | Benzo(b)fluoranthene | NY / 375-6.8 Semivolatiles / Residential Restricted | 5900 | 1300 | 1000 | 1000 | ug/Kg |
| BH79488 | $8270_TCLR | Benzo(b)fluoranthene | NY / 375-6.8 Semivolatiles / Unrestricted Use Soil | 5900 | 1300 | 1000 | 1000 | ug/Kg |
| BH79488 | $8270_TCLR | Benzo(k)fluoranthene | NY / 375-6.8 Semivolatiles / Residential | 2300 | 1300 | 1000 | 1000 | ug/Kg |
| BH79488 | $8270_TCLR | Benzo(k)fluoranthene | NY / 375-6.8 Semivolatiles / Unrestricted Use Soil | 2300 | 1300 | 800 | 800 | ug/Kg |
| BH79488 | $8270_TCLR | Benzo(a)pyrene | NY / 375-6.8 Semivolatiles / Residential | 4000 | 1300 | 1000 | 1000 | ug/Kg |
| BH79488 | $8270_TCLR | Benzo(a)pyrene | NY / 375-6.8 Semivolatiles / Residential Restricted | 4000 | 1300 | 1000 | 1000 | ug/Kg |
| BH79488 | $8270_TCLR | Benzo(a)pyrene | NY / 375-6.8 Semivolatiles / Unrestricted Use Soil | 4000 | 1300 | 1000 | 1000 | ug/Kg |
| BH79488 | $8270_TCLR | Indeno(1,2,3-cd)pyrene | NY / 375-6.8 Semivolatiles / Residential | ND | 1300 | 500 | 500 | ug/Kg |
| BH79488 | $8270_TCLR | Indeno(1,2,3-cd)pyrene | NY / 375-6.8 Semivolatiles / Residential Restricted | ND | 1300 | 500 | 500 | ug/Kg |
| BH79488 | $8270_TCLR | Indeno(1,2,3-cd)pyrene | NY / 375-6.8 Semivolatiles / Unrestricted Use Soil | ND | 1300 | 500 | 500 | ug/Kg |
| BH79488 | $8270_TCLR | Dibenz(a,h)anthracene | NY / 375-6.8 Semivolatiles / Residential | ND | 1300 | 330 | 330 | ug/Kg |
| BH79488 | $8270_TCLR | Dibenz(a,h)anthracene | NY / 375-6.8 Semivolatiles / Residential Restricted | ND | 1300 | 330 | 330 | ug/Kg |
| BH79488 | $8270_TCLR | Dibenz(a,h)anthracene | NY / 375-6.8 Semivolatiles / Unrestricted Use Soil | ND | 1300 | 330 | 330 | ug/Kg |
| BH79488 | $PCB_SMR | PCB-1260 | NY / 375-6.8 PCBs/Pesticides / Unrestricted Use Soil | 190 | 76 | 100 | 100 | ug/Kg |
| BH79488 | CU-SM | Copper | NY / 375-6.8 Metals / Unrestricted Use Soil | 57.7 | 0.35 | 50 | 50 | mg/kg |
| BH79488 | HG-SM | Mercury | NY / 375-6.8 Metals / Unrestricted Use Soil | 0.28 | 0.03 | 0.18 | 0.18 | mg/Kg |
| BH79489 | $8260_TCL_SM | Benzene | NY / 375-6.8 Volatiles / Unrestricted Use Soil | 1800 | 8.1 | 60 | 60 | ug/kg |
| BH79489 | $8260_TCL_SM | Ethylbenzene | NY / 375-6.8 Volatiles / Unrestricted Use Soil | 1200 | 8.1 | 1000 | 1000 | ug/kg |
| BH79489 | $8260_TCL_SM | Total Xylenes | NY / 375-6.8 Volatiles / Unrestricted Use Soil | 4500 | 8.1 | 260 | 260 | ug/kg |
| BH79489 | $8270_TCLR | Benz(a)anthracene | NY / 375-6.8 Semivolatiles / Residential | 1500 | 810 | 1000 | 1000 | ug/Kg |
| BH79489 | $8270_TCLR | Benz(a)anthracene | NY / 375-6.8 Semivolatiles / Residential Restricted | 1500 | 810 | 1000 | 1000 | ug/Kg |
| BH79489 | $8270_TCLR | Benz(a)anthracene | NY / 375-6.8 Semivolatiles / Unrestricted Use Soil | 1500 | 810 | 1000 | 1000 | ug/Kg |
| BH79489 | $8270_TCLR | Chrysene | NY / 375-6.8 Semivolatiles / Residential | 1500 | 810 | 1000 | 1000 | ug/Kg |
| BH79489 | $8270_TCLR | Chrysene | NY / 375-6.8 Semivolatiles / Unrestricted Use Soil | 1500 | 810 | 1000 | 1000 | ug/Kg |
| BH79489 | $8270_TCLR | Benzo(b)fluoranthene | NY / 375-6.8 Semivolatiles / Residential | 1500 | 810 | 1000 | 1000 | ug/Kg |
| BH79489 | $8270_TCLR | Benzo(b)fluoranthene | NY / 375-6.8 Semivolatiles / Residential Restricted | 1500 | 810 | 1000 | 1000 | ug/Kg |
| BH79489 | $8270_TCLR | Benzo(b)fluoranthene | NY / 375-6.8 Semivolatiles / Unrestricted Use Soil | 1500 | 810 | 1000 | 1000 | ug/Kg |
| BH79489 | $8270_TCLR | Benzo(a)pyrene | NY / 375-6.8 Semivolatiles / Residential | 1200 | 810 | 1000 | 1000 | ug/Kg |
| BH79489 | $8270_TCLR | Benzo(a)pyrene | NY / 375-6.8 Semivolatiles / Residential Restricted | 1200 | 810 | 1000 | 1000 | ug/Kg |

# Sample Criteria Exceedences Report

## GBH79483 - HESNY-TUCK

Criteria: NY: 375, 375RRS, 375RS

State: NY

| SampNo | Acode | Phoenix Analyte | Criteria | Result | RL | Criteria | RL Criteria | Analysis Units |
|---|---|---|---|---|---|---|---|---|
| BH79489 | $8270_TCLR | Benzo(a)pyrene | NY / 375-6.8 Semivolatiles / Unrestricted Use Soil | 1200 | 810 | 1000 | 1000 | ug/Kg |
| BH79489 | $8270_TCLR | Indeno(1,2,3-cd)pyrene | NY / 375-6.8 Semivolatiles / Residential | 660 | 500 | 500 | 500 | ug/Kg |
| BH79489 | $8270_TCLR | Indeno(1,2,3-cd)pyrene | NY / 375-6.8 Semivolatiles / Residential Restricted | 660 | 500 | 500 | 500 | ug/Kg |
| BH79489 | $8270_TCLR | Indeno(1,2,3-cd)pyrene | NY / 375-6.8 Semivolatiles / Unrestricted Use Soil | 660 | 500 | 500 | 500 | ug/Kg |
| BH79489 | $DIOX_SMR | 1,4-dioxane | NY / 375-6.8 Volatiles / Residential | ND | 17000 | 9800 | 9800 | ug/kg |
| BH79489 | $DIOX_SMR | 1,4-dioxane | NY / 375-6.8 Volatiles / Residential Restricted | ND | 17000 | 13000 | 13000 | ug/kg |
| BH79489 | $DIOX_SMR | 1,4-dioxane | NY / 375-6.8 Volatiles / Unrestricted Use Soil | ND | 17000 | 100 | 100 | ug/kg |
| BH79489 | $PCB_SMR | PCB-1254 | NY / 375-6.8 PCBs/Pesticides / Unrestricted Use Soil | ND | 120 | 100 | 100 | ug/Kg |
| BH79489 | $PCB_SMR | PCB-1260 | NY / 375-6.8 PCBs/Pesticides / Unrestricted Use Soil | 130 | 120 | 100 | 100 | ug/Kg |
| BH79489 | $PCB_SMR | PCB-1248 | NY / 375-6.8 PCBs/Pesticides / Unrestricted Use Soil | ND | 120 | 100 | 100 | ug/Kg |
| BH79489 | $PCB_SMR | PCB-1232 | NY / 375-6.8 PCBs/Pesticides / Unrestricted Use Soil | ND | 120 | 100 | 100 | ug/Kg |
| BH79489 | $PCB_SMR | PCB-1221 | NY / 375-6.8 PCBs/Pesticides / Unrestricted Use Soil | ND | 120 | 100 | 100 | ug/Kg |
| BH79489 | $PCB_SMR | PCB-1016 | NY / 375-6.8 PCBs/Pesticides / Unrestricted Use Soil | ND | 120 | 100 | 100 | ug/Kg |
| BH79489 | $PCB_SMR | PCB-1242 | NY / 375-6.8 PCBs/Pesticides / Unrestricted Use Soil | ND | 120 | 100 | 100 | ug/Kg |
| BH79489 | AG-SM | Silver | NY / 375-6.8 Metals / Unrestricted Use Soil | 5.10 | 0.58 | 2 | 2 | mg/Kg |
| BH79489 | AS-SM | Arsenic | NY / 375-6.8 Metals / Residential | 17.1 | 1.2 | 16 | 16 | mg/Kg |
| BH79489 | AS-SM | Arsenic | NY / 375-6.8 Metals / Residential Restricted | 17.1 | 1.2 | 16 | 16 | mg/Kg |
| BH79489 | AS-SM | Arsenic | NY / 375-6.8 Metals / Unrestricted Use Soil | 17.1 | 1.2 | 13 | 13 | mg/Kg |
| BH79489 | CD-SM | Cadmium | NY / 375-6.8 Metals / Residential | 3.25 | 0.58 | 2.5 | 2.5 | mg/Kg |
| BH79489 | CD-SM | Cadmium | NY / 375-6.8 Metals / Unrestricted Use Soil | 3.25 | 0.58 | 2.5 | 2.5 | mg/Kg |
| BH79489 | CR-SM | Chromium | NY / 375-6.8 Metals / Unrestricted Use Soil | 84.7 | 0.58 | 30 | | mg/Kg |
| BH79489 | CU-SM | Copper | NY / 375-6.8 Metals / Unrestricted Use Soil | 90.9 | 0.58 | 50 | 50 | mg/kg |
| BH79489 | HG-SM | Mercury | NY / 375-6.8 Metals / Unrestricted Use Soil | 0.57 | 0.05 | 0.18 | 0.18 | mg/Kg |
| BH79489 | NI-SM | Nickel | NY / 375-6.8 Metals / Unrestricted Use Soil | 35.0 | 0.58 | 30 | 30 | mg/Kg |
| BH79489 | PB-SM | Lead | NY / 375-6.8 Metals / Residential | 570 | 5.8 | 400 | 400 | mg/Kg |
| BH79489 | PB-SM | Lead | NY / 375-6.8 Metals / Residential Restricted | 570 | 5.8 | 400 | 400 | mg/Kg |
| BH79489 | PB-SM | Lead | NY / 375-6.8 Metals / Unrestricted Use Soil | 570 | 5.8 | 63 | 63 | mg/Kg |
| BH79489 | ZN-SM | Zinc | NY / 375-6.8 Metals / Unrestricted Use Soil | 677 | 5.8 | 109 | 109 | mg/Kg |

Phoenix Laboratories does not assume responsibility for the data contained in this report. It is provided as an additional tool to identify requested criteria exceedences. All efforts are made to ensure the accuracy of the data (obtained from appropriate agencies). A lack of exceedence information does not necessarily suggest conformance to the criteria. It is ultimately the site professional's responsibility to determine appropriate compliance.

**Environmental Laboratories, Inc.**
**587 East Middle Turnpike, P.O.Box 370, Manchester, CT 06045**
**Tel. (860) 645-1102 Fax (860) 645-0823**

# NY Temperature Narration

**March 16, 2015**

**SDG I.D.: GBH79483**

The samples in this delivery group were received at 4°C.
(Note acceptance criteria is above freezing up to 6°C)

**PHOENIX** Environmental Laboratories, Inc.

# NY/NJ CHAIN OF CUSTODY RECORD

587 East Middle Turnpike, P.O. Box 370, Manchester, CT 06040
Email: info@phoenixlabs.com Fax (860) 645-0823
**Client Services (860) 645-8726**

Temp 4 Pg 1 of 1

**Data Delivery:**
☐ Fax #:
☒ Email: info@hesny.com

Customer:
Address: HYDROENVIRONMENTAL SOLUTIONS
ONE DEANS BRIDGE ROAD
SOMERS, NEW YORK 10589

Project: 109 Marbledale Rd, Tuckahoe, NY
Report to: Tim Carr
Invoice to:

Project P.O:
Phone #: 914-276-2560
Fax #: 914-276-2664
tcarr@hesny.com

**Client Sample - Information - Identification**

Sampler's Signature: RGeller Date: 3/3/15

**Matrix Code:**
DW=drinking water WW=wastewater S=soil/solid O=oil
GW=groundwater SL=sludge A=air X=other

Analysis Request

| Phoenix Sample # | Customer Sample Identification | Sample Matrix | Date Sampled | Time Sampled | TL VOC | TCL SVOC | TCL PCB | Tal Metals | Cyanide | Arsenic | Soil VOA [X] Methanol [ ] S. Bisulfate [X] H2O | GL Soil container ( 8 ) oz | GL Soil container ( ) oz | 40 ml VOA Vial [ ] As is [ ] HCl | GL Amber 1000ml [ ] As is [ ] H2SO4 | PL As is [ ] 1250ml [ ] 500ml [ ] 1000ml | PL H2SO4 [ ] 1250ml [ ] 500ml | PL HNO3 250ml | PL NaOH 250ml | Bacteria Bottle |
|---|---|---|---|---|---|---|---|---|---|---|---|---|---|---|---|---|---|---|---|---|
| 79483 | TB-3(2-4) | S | 3/3/15 | 11:00 | ✓ | ✓ | ✓ | ✓ | ✓ | ✓ | | 3 | 2 | | | | | | | |
| 79484 | TB-4 (24-26) | ↓ | 3/3/15 | 2:00 | ↓ | ↓ | ↓ | ↓ | ↓ | ↓ | | ↓ | ↓ | | | | | | | |
| 79485 | TB-4 (30-32) | ↓ | 3/3/15 | 2:00 | ↓ | ↓ | ↓ | ↓ | ↓ | ↓ | | ↓ | ↓ | | | | | | | |
| 79486 | TB-9 (2-4) | ↓ | 3/2/15 | 12:00 | ↓ | ↓ | ↓ | ↓ | ↓ | ↓ | | ↓ | ↓ | | | | | | | |
| 79487 | TB-9 (7-9) | ↓ | 3/2/15 | 12:00 | ↓ | ↓ | ↓ | ↓ | ↓ | ↓ | | ↓ | ↓ | | | | | | | |
| 79488 | TB-10 (4-6) | ↓ | 3/2/15 | 3:00 | ↓ | ↓ | ↓ | ↓ | ↓ | ↓ | | ↓ | ↓ | | | | | | | |
| 79489 | TB-10 (32-34) | ↓ | 3/3/15 | 10:00 | ↓ | ↓ | ↓ | ↓ | ↓ | ↓ | | ↓ | ↓ | | | | | | | |

| Relinquished by: | Accepted by: | Date: | Time: |
|---|---|---|---|
| [signature] | [signature] | 3-4-15 | 11:50 |
| [signature] | [signature] | 3/4/15 | 16:20 |
| | | | |

Comments, Special Requirements or Regulations:

**Turnaround:**
☐ 1 Day*
☐ 2 Days*
☐ 3 Days*
☒ Standard
☐ Other
* SURCHARGE APPLIES

**NJ**
☐ Res. Criteria
☐ Non-Res. Criteria
☐ Impact to GW Soil Cleanup Criteria
☐ GW Criteria

**NY**
☐ TAGM 4046 GW
☐ TAGM 4046 SOIL
☒ NY375 Unrestricted Soil
☒ NY375 Residential Soil
☒ NY375 Restricted Non-Residential Soil

**Data Format**
☐ Phoenix Std Report
☒ Excel
☒ PDF
☐ GIS/Key
☒ EQuIS
☐ NJ Hazsite EDD
☐ NY EZ EDD (ASP)
☐ Other

**Data Package**
☐ NJ Reduced Deliv. *
☐ NY Enhanced (ASP B) *
☐ Other

State where samples were collected: NY

PHOENIX
Environmental Laboratories, Inc.

Monday, May 04, 2015

Attn: Mr. Tim Carr
HydroEnvironmental Solutions, Inc.
One Deans Bridge Rd
Somers NY 10589

Project ID: 109 MARBLEDALE RD., TUCKAHOE, NY
Sample ID#s: BH79483 - BH79489

This laboratory is in compliance with the NELAC requirements of procedures used except where indicated.

This report contains results for the parameters tested, under the sampling conditions described on the Chain Of Custody, as received by the laboratory.

All soils, solids and sludges are reported on a dry weight basis unless otherwise noted in the sample comments.

A scanned version of the COC form accompanies the analytical report and is an exact duplicate of the original.

Enclosed are revised Analysis Report pages. Please replace and discard the original pages. If you have any questions concerning this testing, please do not hesitate to contact Phoenix Client Services at ext. 200.

Sincerely yours,

Phyllis Shiller
Laboratory Director

NELAC - #NY11301
CT Lab Registration #PH-0618
MA Lab Registration #MA-CT-007
ME Lab Registration #CT-007
NH Lab Registration #213693-A,B
NJ Lab Registration #CT-003
NY Lab Registration #11301
PA Lab Registration #68-03530
RI Lab Registration #63
VT Lab Registration #VT11301

587 East Middle Turnpike, P.O. Box 370, Manchester, CT 06040
Telephone (860) 645-1102 Fax (860) 645-0823